Metrology System for Space Interferometry Mission System Testbed 3

Alireza Azizi, Oscar Alvarez-Salazar, Renaud Goullioud, Yekta Gursel
Jet Propulsion Laboratory, California Institute of Technology,
4800 Oak Grove Dr., Pasadena, CA 91109
818-354-0639
azizi@s383.jpl.nasa.gov

Abstract: In a 3-baseline interferometer fourteen metrology gauges are used to monitor changes in the two baselines and calculate the length of the third. Simulation for estimating the third baseline indicates measurement capability of better than 1 nm error.
©2003 Optical society of America
OCIS code: (120.3940) metrology; (120.3180) Interferometry

1. Introduction

The Space Interferometry Mission's (SIM) test bed, a 3-baseline interferometer (STB3), has been developed at JPL to demonstrate fringe tracking of dim-stars on a flight-like structure in the nano-meter range. This task is achieved by feed forwarding the path length information from the two guide-interferometers to the science-interferometer. The testbed consists of a starlight system, a metrology system and realtime control software. The starlight and realtime control systems have been described in other papers [1,2]. This paper concentrates on the metrology system.

Figure 1: STB3 metrology beams layout

2. Metrology system

The metrology system uses a heterodyne technique to measure changes in the length between two fiducial points. The metrology system consists of the beam distribution and external metrology system.

2.1 Metrology Beam Distribution

To support the large number of metrology beams (14 beam launchers) a distribution system was designed. A 150 mW diode-pumped YAG laser at 1319 nm was selected as a main source. The infrared laser has two advantages, first it is outside of the starlight visible range, and two it is more affordable to use a powerful laser in the infrared range.

The laser light is split into two perpendicular polarizations (P and S) via a polarized beam splitter. The frequencies of the two polarizations are shifted by a known amount (200KHz) relative to each other. Two 1x32 polarized maintaining waveguide couplers are used to distribute the laser beams to all the 14 beam launchers (Figure 2).

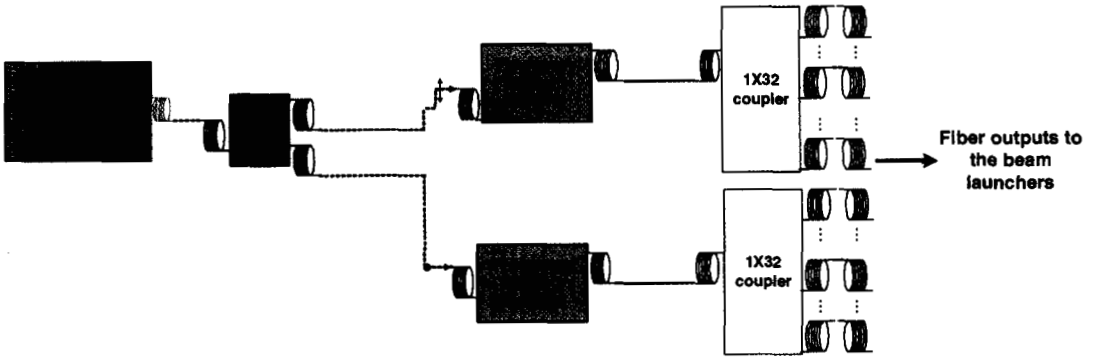

Figure 2: Metrology laser distribution System

2.2 External Metrology

In addition to measuring the two baselines of the guide-interferometers, the external metrology system is also used to calculate the relative orientation between the science baseline and the two guides. The baseline is defined as a distance between two corner cubes on the collectors. In the case of the two guides, the corner cubes are located on the spiders after the grating which generates the guide stars. For the science baseline, the corner cubes (12.7 mm) are located at the center of the siderostat. Since there is no direct line between the two corner cubes on the science baseline, the length of the baseline is calculated from the other measurements.

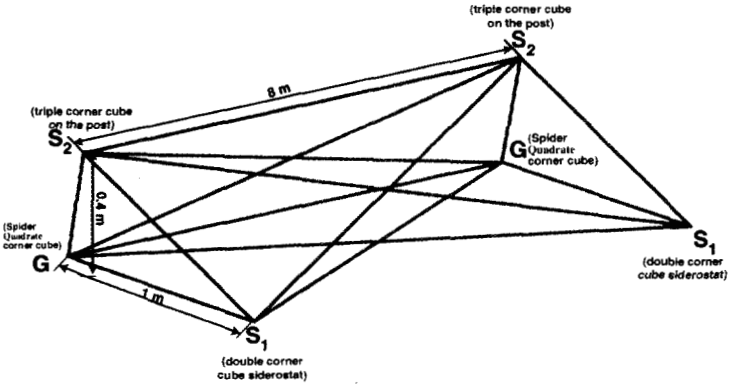

Figure 3: Location of fiducials and external metrology beams

The details of the calculation are shown in a separate paper [3]. There are 14 metrology measurements, but due to geometry and selection of a proper coordinate system the number of unknown measurements will reduce to 12. The initial survey of the fiducials reference locations can be measured to better than 0.5 mm using thedolite. Initial calculation indicates that this level of accuracy is sufficient for this testbed. The result of a simulation of the metrology solution with an assumption of perfect gauge measurements yields 0.1 nm estimated error for the science baseline. Addition of the error for the gauges (10 nm RMS error) will increase the estimated error for the science baseline to 0.6 nm. One of the first tests after completion of the metrology system in the first quarter of next year is to compare the results of the science baseline measurement with simulation.

References

R. Goullioud, and A. Azizi, "Optical design of the SIM system testbed 3", Proc. of SPIE Symposium on Interferometry in Optical Astronomy, Vol. 4006 (2000).

E. A. McKenney and O.S. Alvarez-Salazar, "SIM Test Bed 3 Time Control Software", SPIE Conference on Astronomical Telescopes: Interferometers in Space, 22-28 August 2002 Waikoloa, Hawaii, USA

O. S. Alvarez-Salazar and A. Azizi, "Space Interferometry Mission System Testbed-3: External Metrology", submitted paper, SPIE Astronomical Telescopes and Instrumentation, Jun e 2004 Glasgow Scotland.