AIAA-2003-4610

PRECISION ADJUSTABLE LIQUID REGULATOR (ALR)

Richard Meinhold
Space Fluids PL, Systems Group
Moog Inc.
East Aurora, NY 14052

Morgan Parker
Propulsion Flight Systems Group
Jet Propulsion Laboratory
Pasadena, Ca

ABSTRACT

A passive mechanical regulator has been developed for the control of fuel or oxidizer flow to a 450N class bipropellant engine for use on commercial and interplanetary spacecraft. There are several potential benefits to the propulsion system, depending on mission requirements and spacecraft design. This system design enables more precise control of main engine mixture ratio and inlet pressure, and simplifies the pressurization system by transferring the function of main engine flowrate control from the pressurization/propellant tank assemblies, to a single component, the ALR.

This design can also reduce the thermal control requirements on the propellant tanks, avoid costly ΔQualification testing of biprop engines for missions with more stringent requirements, and reduce the overall propulsion system mass and power usage.

In order to realize these benefits, the ALR must meet stringent design requirements. The main advantage of this regulator over other units available in the market is that it can regulate about it's nominal set point to within ±0.85%, and change its regulation set point in flight ±4% about that nominal point. The set point change is handled actively via a stepper motor driven actuator, which converts rotary into linear motion to effect the spring preload acting on the regulator. Once adjusted to a particular set point, the actuator remains in its final position unpowered, and the regulator passively maintains outlet pressure.

The very precise outlet regulation pressure is possible due to new technology developed by Moog, Inc. which reduces typical regulator mechanical hysteresis to near zero. The ALR requirements specified an outlet pressure set point range from 225 to 255 psi, and equivalent water flow rates required were in the 0.17 lb/sec range. The regulation output pressure is maintained at ±2 psi about the set point from a ΔP (delta or differential pressure) of 20 to over 100 psid. Maximum upstream system pressure was specified at 320 psi. The regulator is fault tolerant in that it was purposely designed with no shutoff capability, such that the minimum flow position of the poppet still allows the subsystem to provide adequate flow to the main engine for basic operation.

INTRODUCTION

In order to achieve optimal performance over the entire life of a propulsion system, JPL required a remotely operated, Adjustable set point, precision Liquid Regulator (ALR). The operating specifications of the unit were very challenging, both from an environmental standpoint (in excess of 30 Mrad total dose radiation) and in the overall accuracy requirement. The requested set point (ALR outlet pressure) range of ±4% is the regulation accuracy range of most liquid regulators [see figure 1]. The required regulation accuracy

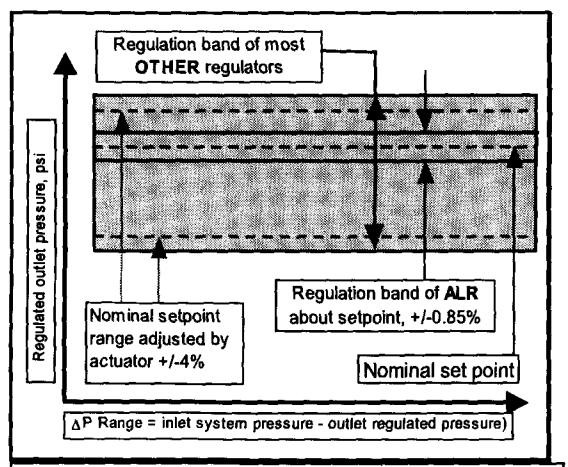

Figure 1: Regulation setpoint and band explanation

What Makes ALR Different?

Comparison to other Regulators

Model Number	Flow Rate	Inlet Pressure Max psi	Inlet Pressure Min psi	Regulated Pressure Nominal psi	Regulated Pressure +/- Tolerance psi	Regulated Pressure % of Nominal, +/-	Min Inlet Pressure/Nominal Regulation Pressure Pin(min)/Preg
[illegible]							
50E945	1 x 10-4 lb/sec H2O	400	250	170	+/- 5.00	+/- 2.94%	1.47
50X798	0.170 lb/sec MON75	1800	1275	990	+/- 49.50	+/- 5.00%	1.29
50E928-01	**0.172 lb/sec N2H4**	**320**	**255**	**245**	**+/- 2.00**	**+/- 0.82%**	**1.04**
50E928-02	**0.146 lb/sec NTO**	**320**	**245**	**235**	**+/- 2.00**	**+/- 0.85%**	**1.04**
[illegible]							
50E741	60 mg/sec Xe	2700	88	37	+/- 1.45	+/- 3.92%	2.38
50E796	12 mg/sec Xe	2175	100	37	+/- 1.45	+/- 3.92%	2.70
50-719	480 cc/hr Xe	1305	100	20.5	+/- 0.30	+/- 1.46%	4.88
50X802	200 sccm Ar	2000	150	35	+/- 5.00	+/- 14.29%	4.29
50X713A	0.07 SCFM GN2	290	50	5	+/- 0.30	+/- 6.00%	10.00

Extremely tight regulation band

Small difference between inlet pressure and regulation pressure

Figure 2: Examples of previous regulator specifications

about a set point was ±0.85% over a large ΔP range and life. Figure 2 compares these numbers to previously manufactured "precision" regulators. It is obvious that the ALR was required to be a significant improvement over any unit previously built.

To tackle this challenge, Moog utilized its Space Mechanisms product line (SMPL), based in Chatsworth, Ca, and its Space Fluids product line (SFPL) based in East Aurora, NY. The SMPL developed a stepper motor actuator based on a standard space rated product line, which used 28vDC input and a 100:1 harmonic drive reduction, to convert an electrical command input a known linear translation output. The SFPL then utilized this linear output as a preload adjustment on a spring system which controlled the regulation process.

DESIGN DETAILS

Though Moog's SFPL had extensive background in space rated regulator design, this level of accuracy required a new design approach. Regulator design must account for droop and mechanical loses. Droop is amount of pressure change required to effect change in the controlling orifice area. The controlling orifice must change size in order to maintain outlet pressure with varying upstream supply pressures and downstream flow demands. Mechanical losses are caused by frictional interactions between sliding parts. When a change in motion direction of the controlling poppet (moving portion of the control orifice) is required, the mechanical losses must be overcome before the poppet begins to move. The total regulation accuracy pressure must contain a portion for mechanical losses, a portion for control pressure (droop) and some margin for life and temperature considerations.

Basic Regulator Design and Operation

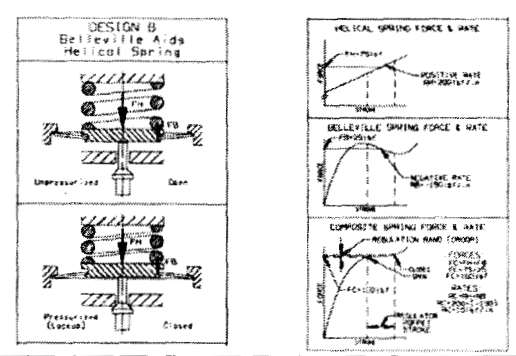

Figure 3: Regulator spring system description

Typically, a regulator has a flexible pressure sensing element (diaphragm or bellows) which converts pressure over an area into force acting on a spring-mass system. The larger the pressure sensing area, the larger the force change

becomes for small pressure changes. The design dilemma is the pressure area wants to be as small as possible to minimize the weight and size of the spring system that must interact with it. The spring system must support the pressure load up to regulation pressure with little to no motion, and then have a relatively large motion with very little pressure change. My colleague Hans Toews used to say, "a good regulator is the equivalent of balancing a truck on a watch spring". In order to

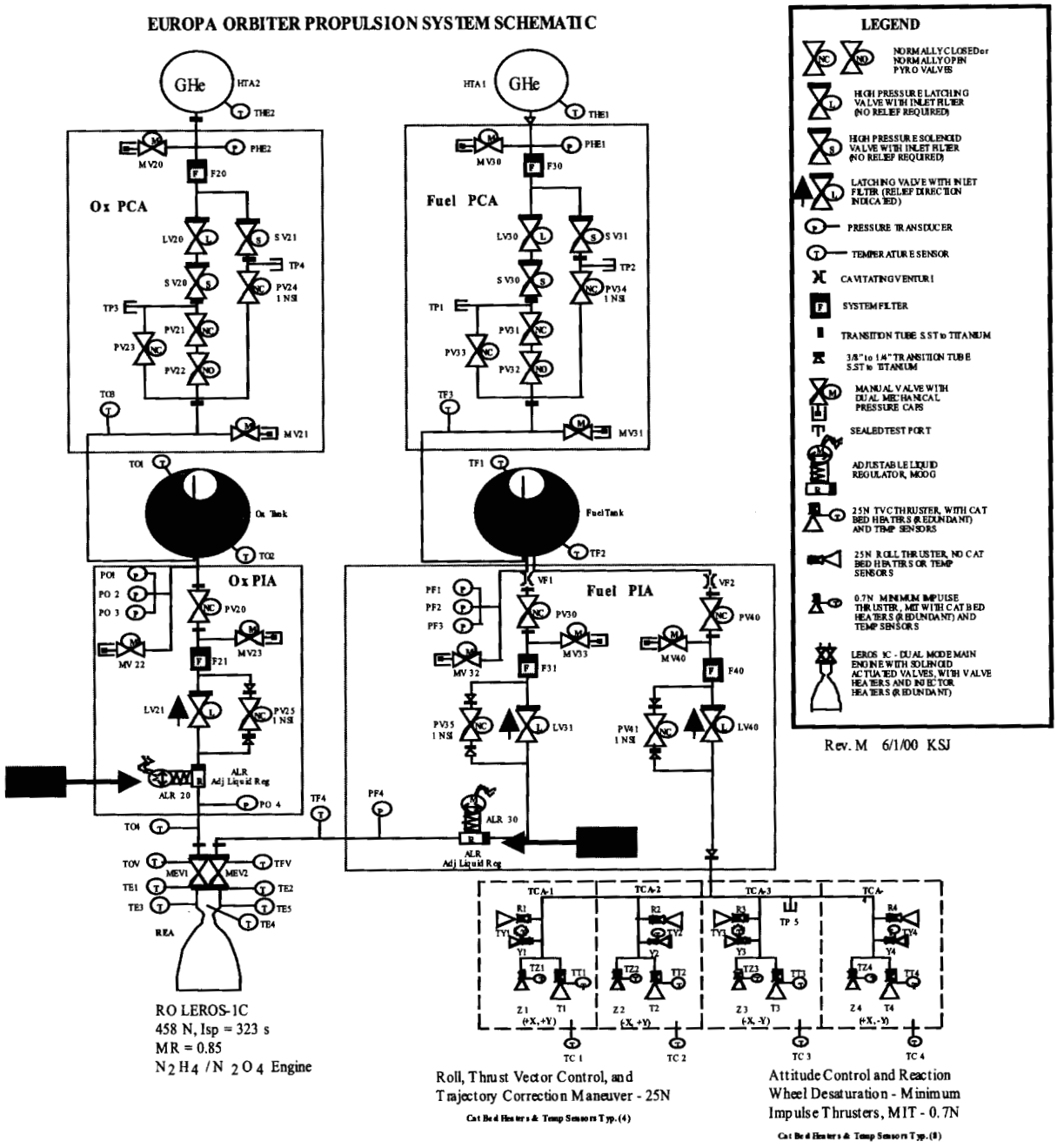

Figure 4: Europa orbiter propulsion system schmatic highlighting two ALR locations.

minimize the overall size of the system, high positive rate helical springs must be used with high negative rate Belleville springs. When the two rates are combined correctly, a high preload force can be obtained with a relatively low total spring rate.

The effective pressure sensing area used in the ALR design was 1.5 in^2. At a nominal regulation pressure (set point) of 235 psi, and a 4 psi accuracy range (±2 psi about the 235 nominal set point), the spring system must counteract 350 lb of initial pressure force and then operate with a ±3 lb force change. As can be seen by these numbers, even a very small frictional interaction can absorb more force than is available to regulate.

It should also be noted that the ALR regulates relative to its current surrounding atmosphere. Therefore if the unit is in a vacuum, it will regulate on an absolute scale, if it is in a standard atmosphere, it will regulate at gage pressure.

SYSTEM SCHEMATIC

A schematic is shown in figure 4 and representative of the Europa orbiter propulsion system at the time the ALR was conceptualized. Two ALR's are used as shown, one for fuel side, one for the Ox side, to control the feed to the spacecraft main engine. As can be seen, a bang-bang type GHe system is used to pressurize the fuel and Ox tanks. Also notice that the ACS system is being fed via the propellant side tank upstream of the ALR, and thus will influence the inlet pressure when fired. The ACS system can draw approximately 10% main engine flow when fired. Since the ALR is always open, water hammer effects from ACS pulsing will generally pass through the ALR slightly damped, but general instability and regulated pressure fluctuations during these events were not permitted.

ALR PROGRAM RESULTS

Through a development program, the final ALR design culminated in the use of ultra precision, very high strength Belleville springs and incorporation of an innovative motion system support structure. This allowed the unit to use roughly half the total regulation band (2 psi or 3 lb of force) for droop, and the other half for loses and margin. In order to achieve the tight regulation accuracy, the unit design contains many very tight assembly level tolerances. Once initially assembled and setup however, the design showed it could be reliably disassembled and re-assembled without affecting performance.

During the development phase, the tests listed in the table below were performed to gain confidence for qualification. These tests were deemed the most important to the overall system function, and could not be verified reliably through analytical simulation.

The two plots shown on the next page (Figures 5 & 6) illustrate relative unit performance. The first plots shows ALR downstream shut off and on performance. In this plot the unit is initially flowing steady state for approximately 7 seconds when a downstream fast acting valve (~11 ms) is shut off. Stopping flow through the system. The system remains in this state for another 7 seconds when the dowstream valve is re-energized, initiating flow. This process is repeated twice. This plot shows good response and stability from the ALR. It should be noted that the flow meter used had a very slow response time and thus does not directly track the pressure histories. The second plot illustrates one measure of basic unit hysteresis by ramping inlet pressure from zero to 320 psi and back to zero while maintaining a fixed down stream orifice. The plot was developed over an approximately one minute period via smoothly changing system pressure via a hand regulator. It shows the unit regulates smoothly over the entire range and hysteresis between the increase and decrease legs is barely perceptible above 20 psid.

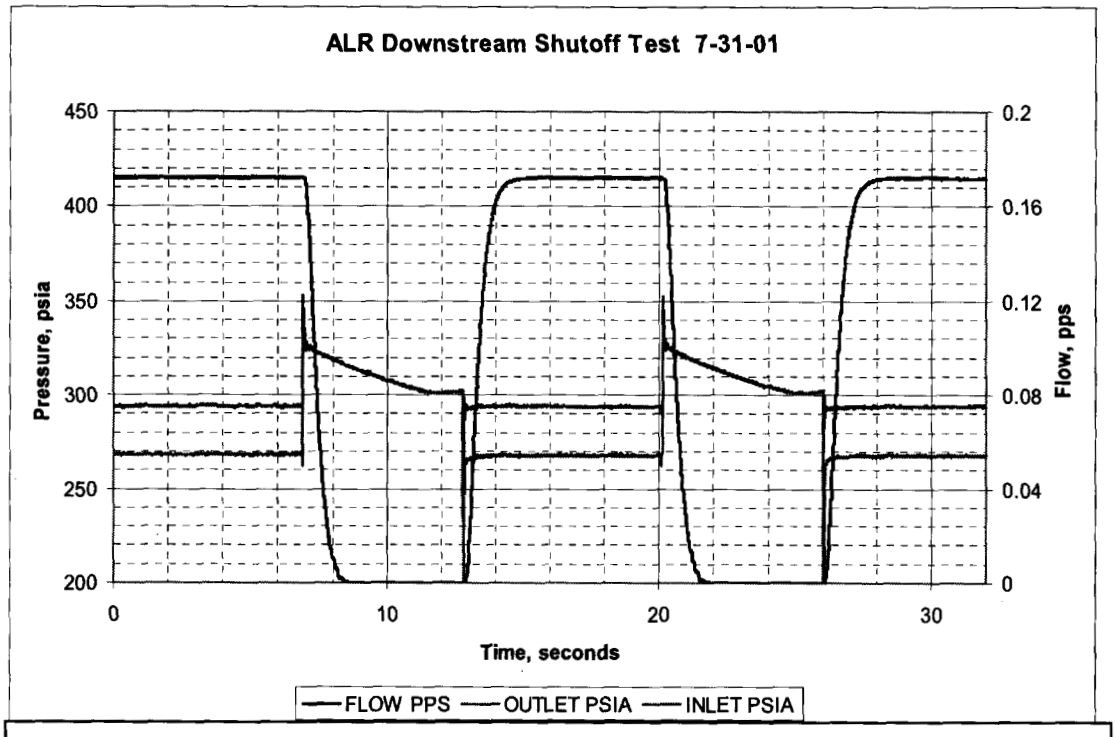

Figure 6: Sample data showing latch valve actuation downstream of ALR

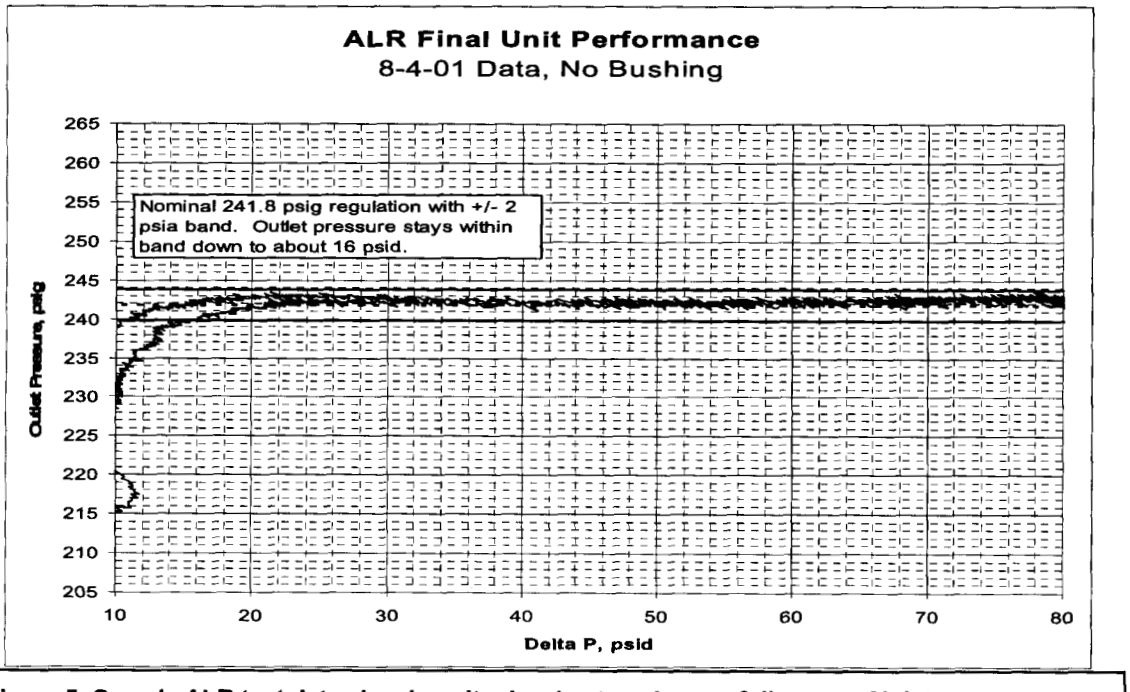

Figure 5: Sample ALR test data showing ultra low hysteresis over full range of inlet pressures and fixed nominal regulation pressure. Inlet ramped from 0 to 320 psi, back to 0 over ~1 minute

Summary of development tests preformed:

Description	Required Level	Result
Basic Regulation	±2 psi	Within ±2 psi over 20 to 110 psid
Set point accuracy	Within 1 psi	Approximately 0.1 psi achieved
Set point repeatability	Within 1 psi	Within accuracy of test stand, approximately 0.1 psi
Proof Pressure	To 572 psi	No change in regulation performance after proof pressure application
Upstream Perturbation	10Hz ACS simulation	Unit stable immediately after pulses stopped.
Downstream rapid On/Off	Stable within 2 seconds	Engine Start/Stop simulation, stable within ~300 ms
Qualification level Random vibration	16.7 Grms 3 minutes each axis	Survived, no perceptible change in performance after vibration

PERFORMANCE PARAMTERS

The table below lists the basic requirements specified for the Fuel and Ox units. The actual part configurations (drawing tree) were the same for both units. The flow and pressure differences were handled by slight setup variations.

ALR Basic Performance Characteristics:

	Oxidizer	Fuel
Fluid Media	Nitrogen Tetroxide	Hydrazine and MMH
Inlet Pressure Range:	320 to 235 psia	320 to 245 psia
Proof Pressure:	572 psia	572 psia
Burst Pressure	800 psia	800 psia
Nominal Setpoint:	235 psia	245 psia
Adjustable Setpoint Range	235 ±10 psia	245 ±10 psia
Accuracy Around the Setpoint	± 2 psia	±2 psia
Nominal Flow Rates	0.146 lb/sec	0.172 lb/sec
Operating Current	160 ma Maximum for both fluids	
Operational Temp. Range:	+10°C to +45°C	
Random Vibration:	16.7 grms overall for qualification	
Weight:	1.2 kg maximum	

CONCLUSIONS

The ALR development met the main objectives for performance, including regulation accuracy and stability, and the ALR is ready for qualification. The ALR contract was slated to continue into qualification and production, but due to program cut backs and Europa Orbiter mission cancellation, the qualification of the ALR was forced into indefinite hold. This development proved that a 0.85% passive regulation accuracy unit was possible while meeting several other very stringent requirements. The ALR could benefit future propulsion subsystems by simplifying the pressurization system, reducing the overall propulsion system mass, reducing the thermal control requirements on the propellant tanks, and thus power usage, and enabling more precise control of main engine mixture ratio and inlet pressure.

The next page shows the full ALR at roughly a 1:1 scale. The gray lines on the left side of the figure show the division of the actuator and regulator hardware portions.

Adjustable Liquid Regulator (ALR) Developed for JPL (1999-2001)

MOOG

Stepper Motor Actuator (top portion)
Stepper motor combined with a 100:1 harmonic drive
0.080 total linear output travel
28 volt nominal supply
25 millionths linear output per rotary step
tested to 300 lb axial load
Produced by Moog,
Space Mechanisms PL

(Approximate actual size shown)

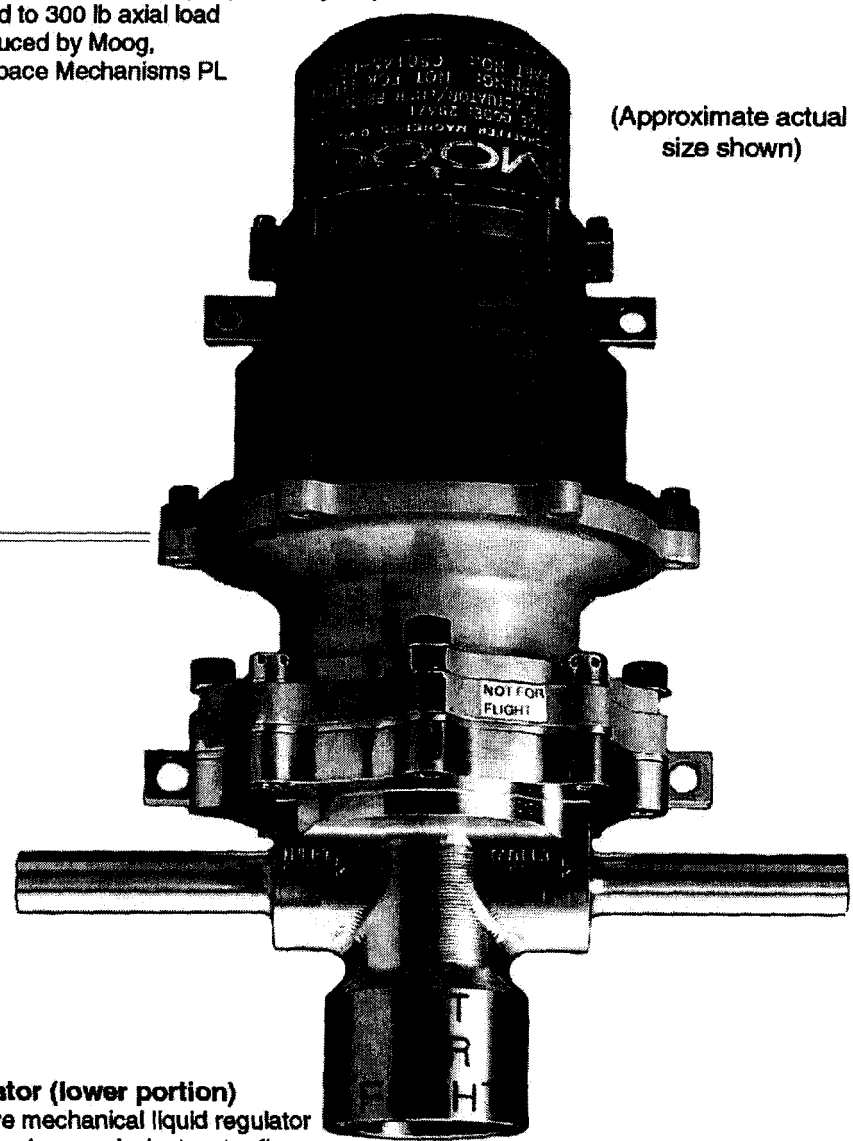

Regulator (lower portion)
Passive mechanical liquid regulator
0.17 lbm/sec equivalent water flow
Operating fluids: NTO, Hydrazine, MMH
Patent pending technology reduces spring system hystersis to near zero
Output regulation ±2 psi about setpoint over 20 to 110 psid
Regulator set point adjusted by actuator from 225 to 255 psi
Produced By Moog, Space Fluids PL