Jet Propulsion Laboratory
California Institute of Technology

Stanford meeting
CGI Testbed Planning

Joon Seo for Testbed team
Ilya Poberezhskiy for SE team

12 December 2019

© 2019. California Institute of Technology. Government sponsorship acknowledged.

Outline

- **CGI Testbed Objectives through CGI Lifecycle**
- **Testbed Modification Plan & Schedule after EDUs are available before CGI I&T (2021/2 – 2022/4)**
- **Testbed Operation Plan & Schedule from now until testbed modification. (NOW – 2021/9)**

- **Acronyms**
  - **EDU: Engineering Development Unit** (same form, fit, and function as the flight unit, but not necessarily built with flight parts and without quality assurance oversight)

Testbed Objectives through CGI Lifecycle

- Now
- 2/2021 — Begin of delivery of EDUs
- 8/2022 — Begin of CGI TVAC test
- 8/2023 — CGI Delivery to GSFC
- 8/2025 — WFIRST Launch

- **Acronyms**
  - **TVAC: Thermal Vacuum** (CGI TVAC test = complete CGI operation test)

Testbed Objectives through CGI Lifecycle

Now

Stage I

- CGI model validation
- Mitigation of top CGI risks approved by the project.

2/2021 Begin of delivery of EDUs

Stage II

- Verify CGI operation using EDUs, FPGAs and flight software (Risk #62)
- Dry run CGI TVAC test operation. Also test CVS.

8/2022 Begin of CGI TVAC test

Stage III

- Continue debugging late software, firmware issues
- Resolve performance issues identified during II&T. Root cause analysis on PFRs.
- Prepare/check TVAC2 procedures while CGI is going through TVAC1

8/2023 CGI Delivery to GSFC

Stage IV

- Model validation in support of closing L2 MRD (Mission Req. Doc.) requirements
- Troubleshooting payload AI&T issues (e.g. pupil alignment)

- Late FSW patches/ Closing late PFRs
- Dry run IOC (in orbit commissioning) procedures
- Work with IPAC to generate data for their pipeline.
- Train new flight operators, if needed

8/2025 WFIRST Launch

Stage V

- Validating command sequences
- Troubleshooting performance issues that emerge during CGI commissioning and tech demo
- **Validating new algorithms and other FSW updates**

- CVS: CGI Verification Stimulus (OTA simulator during CGI test)

- PFR: Problem Fault Report
- FSW: Flight Software

Testbed Objectives through CGI Lifecycle

Now

Stage I

- CGI model validation
- Mitigation of top CGI risks approved by the project.

2/2021 Begin of delivery of EDUs

Today's Topic

Stage II

- Verify CGI operation using EDUs, FPGAs and flight software (Risk #62)
- Dry run CGI TVAC test operation. Also test CVS.

8/2022 Begin of CGI TVAC test

Stage III

- Continue debugging late software, firmware issues
- Resolve performance issues identified during II&T. Root cause analysis on PFRs.
- Prepare/check TVAC2 procedures while CGI is going through TVAC1

8/2023 CGI Delivery to GSFC

Stage IV

- Model validation in support of closing L2 MRD (Mission Req. Doc.) requirements
- Troubleshooting payload AI&T issues (e.g. pupil alignment)

- Late FSW patches/ Closing late PFRs
- Dry run IOC (in orbit commissioning) procedures
- Work with IPAC to generate data for their pipeline.
- Train new flight operators, if needed

8/2025 WFIRST Launch

Stage V

- Validating command sequences
- Troubleshooting performance issues that emerge during CGI commissioning and tech demo
- **Validating new algorithms and other FSW updates**

- CVS: CGI Verification Stimulus (OTA simulator during CGI test)

- PFR: Problem Fault Report
- FSW: Flight Software

CGI Testbeds

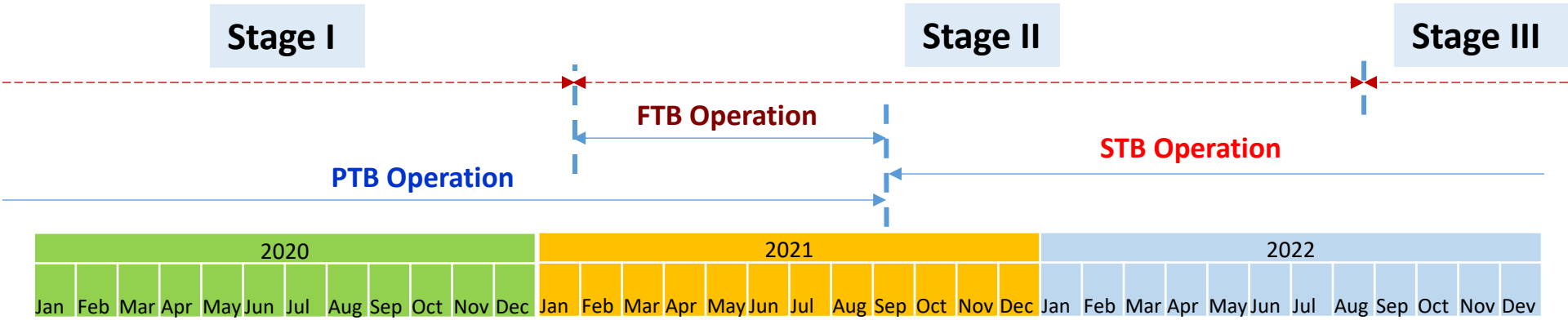

- **Performance Testbed (PTB)**
  - The testbed since 2016. (Other names of OMC, MCB, and Technology Testbed)
  - Has no EDUs but the flight-like optical layouts, masks, and mechanisms.
  - Used for coronagraphic performance & model validation
- **Functional Testbed (FTB):**
  - Populated with available EDUs on a Table near PTB but not in vacuum. (aka Table-top testbed)
  - No optical stimulus, no indication of optical performance
  - Only for FSW & EDU Avionics development and troubleshooting
  - Run by I&T. FSW and Avionics as the primary user early on, used for operations later
- **System Testbed (STB) = PTB + FTB**
  - PTB receives all the EDUs from FTB and undergoes a limited optical reconfiguration to become the CGI Systems Testbed.
  - STB is a single flight-like CGI testbed afterward.
  - STB performs meaningful CGI system-level tests prior to flight II&T, during II&T, after CGI delivery, and during on-orbit commissioning and tech demo

System Testbed v.s. CGI Brief Overview

	Flight CGI	System Testbed
Test Period	9/2022 – 9/2023 (TVAC)	9/2021 -
Test Location	306 High Bay	HCIT (318 High Bay)
Optical H/W	Flight Units	All EDUs except passive optics, ExCam, DM2, 5 PIEs (See Page 12, 17) . Missing EDUs are replaced with COTS H/W.
Layout	Flight layout	Similar to CGI's but not same. Layout train is same as CGI. F/# and pupil sizes differ by within 10 %. (Page 23)
Avionics H/W	Flight Units	Avionics EDUs are not vacuum-compatible except DME. Operated outside chamber through vacuum feed-throughs.
S/W	Flight S/W	Can be operated by either Flight SW and an arbitrary computer (or algorithm)
NOTE		After CGI is delivered to GSFC in 2023, and before and after launch in 2025, STB can test both baseline and non-baselined tests.

- **ExCam: Exoplanetary System Camera (or science camera or DICam)**
- **PIE: PAM Interface Electronics (PAM driver unit)**

EDUs & Testbeds Locations in HCIT

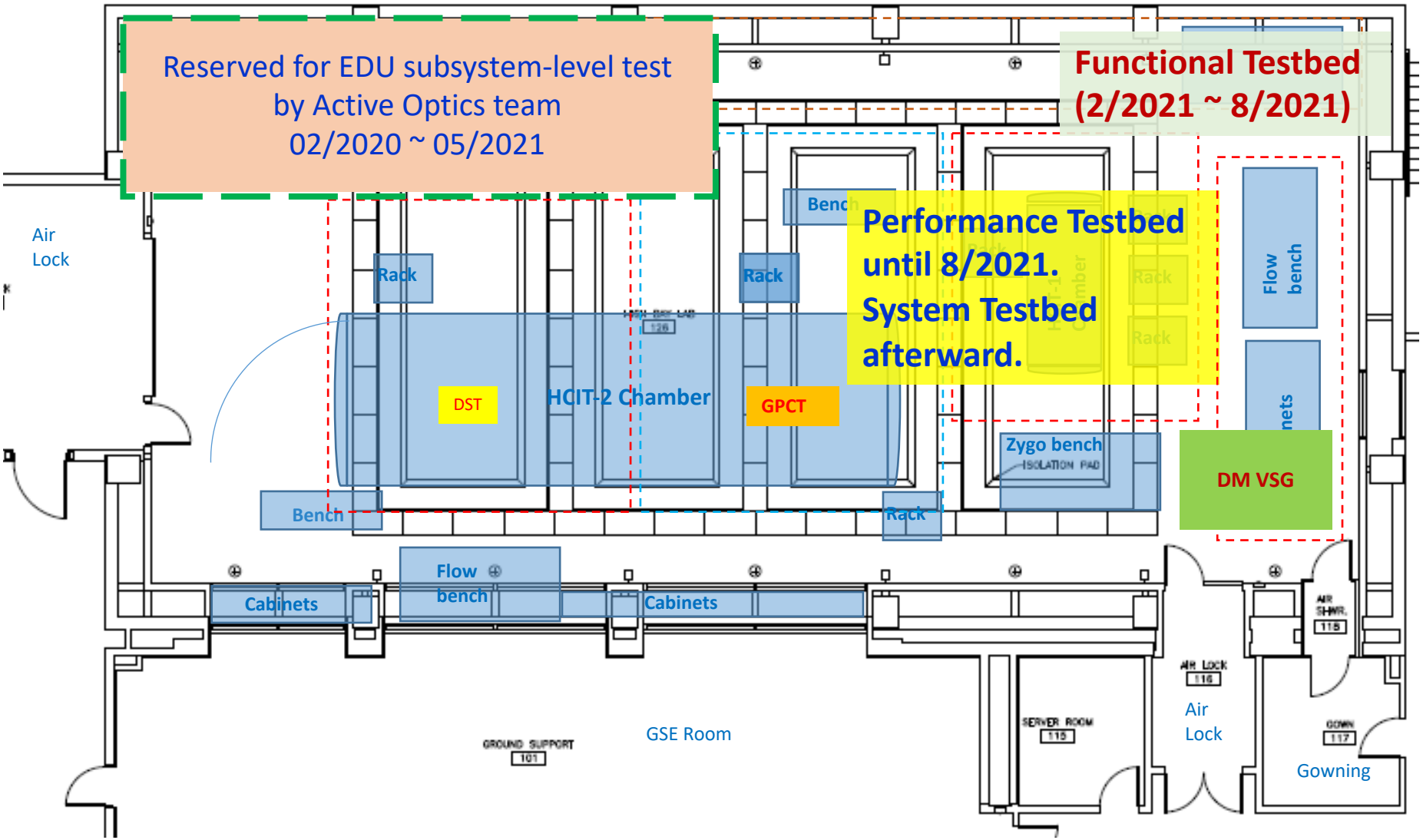

EDU & CVS Plan

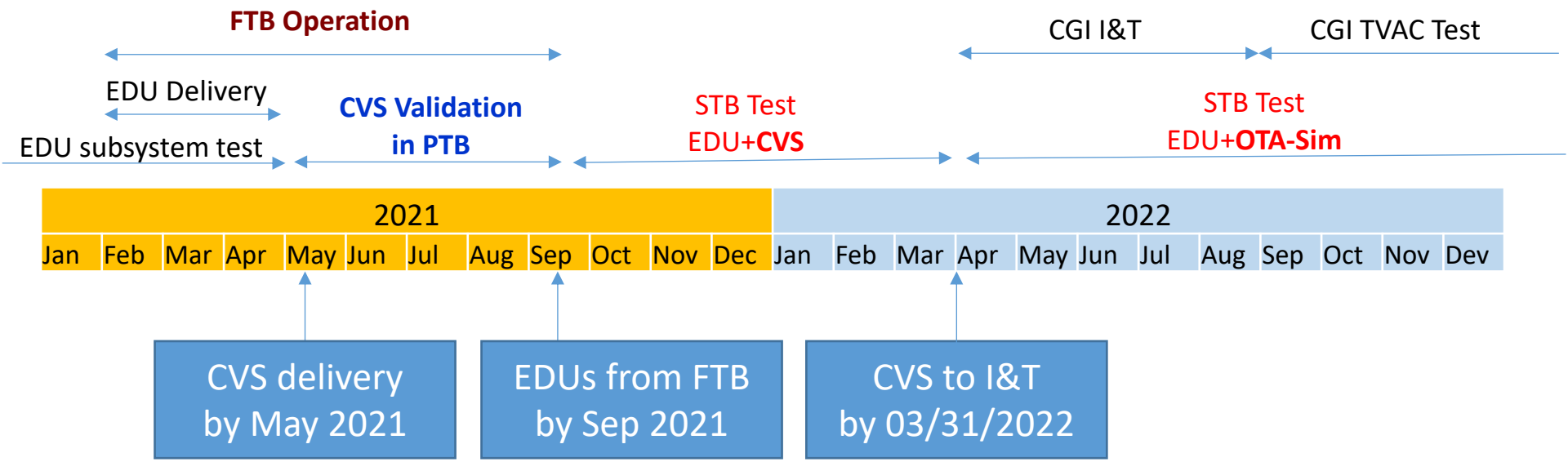

- **EDU subsystem level test by Active Optics team until April 2021.**
- **FTB begins from Feb 2021. By May 2021, all EDUs are installed in FTB.**
- **CVS (CGI Verification Stimulus) installed in PTB by May 2021. CVS is validated in PTB by Sep 2021.**
- **By Sep 2021, all EDUs are installed in PTB. PTB becomes STB.**
- **From Sep 2021 to 3/31/2022, EDU test with the validated CVS.**
- **CVS is delivered to I&T on 3/31/2022.**
- **After 3/31/2022, STB is operated with the OTA-Simulator (currently in PTB).**

CGI AVS Diagram

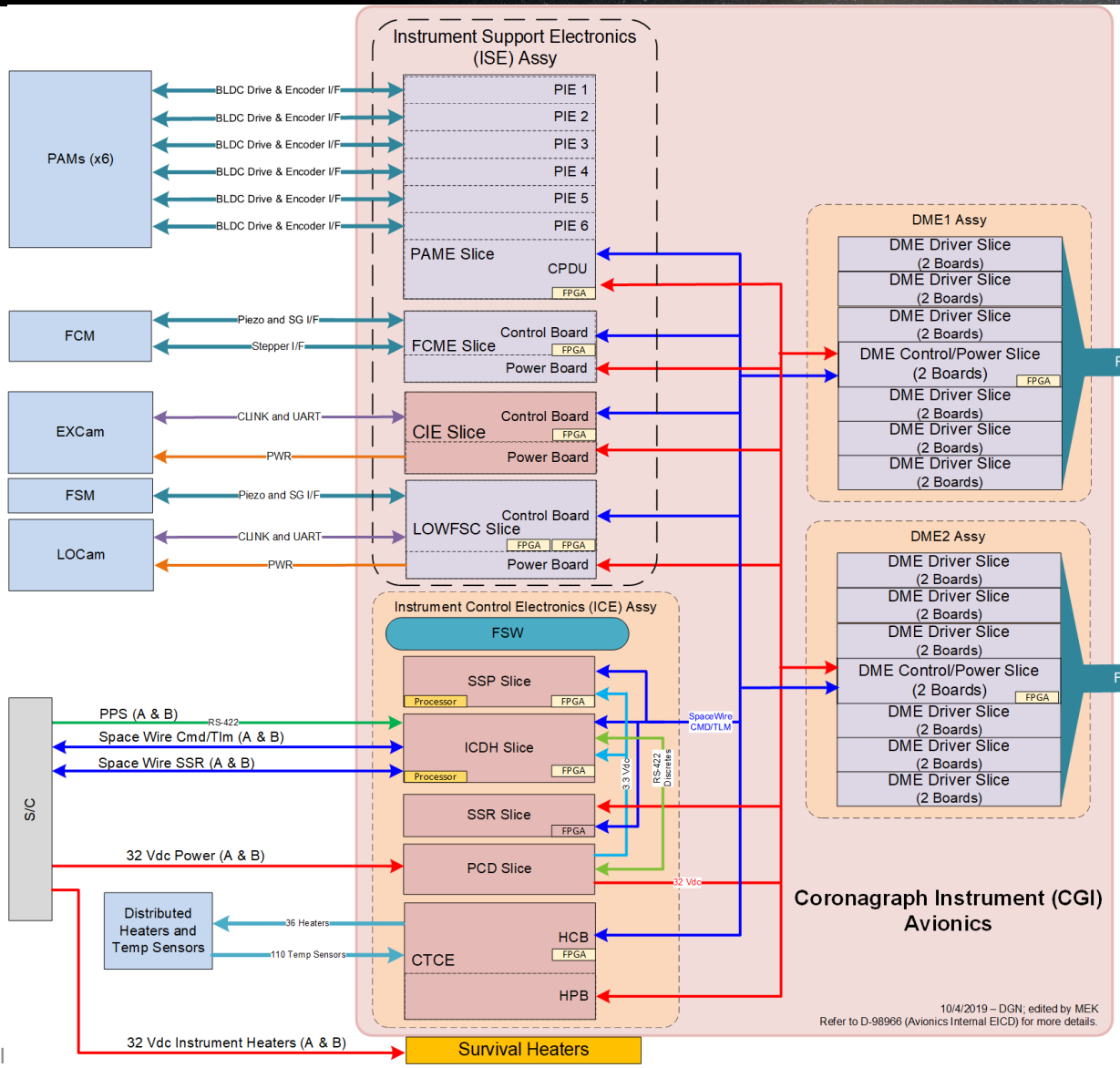

Legend:

- Tested together before delivery to ETB and II&T
- Delivered separately to users before integration in ETB and II&T

List of Abbreviations:

- CIE = Camera Interface Electronics
- CTCE = Coronagraph Thermal Control Electronics
- CPDU = Command & Power Distribution Unit
- EXCam = EXoplanetary Systems Camera
- DM = Deformable Mirror
- DME = Deformable Mirror Electronics
- FCM = Focus Control Mechanism
- FCME = Focus Control Mechanism Electronics
- FSM = Fast Steering Mirror
- FSW = Flight Software
- HCB = Heater Control Board
- HPB = Heater Power Board
- ICDH = Instrument Command & Data Handling (GSFC WPC)
- LOCam = Low-Order Wavefront Sensor Camera
- LOWFSC = Low Order Wavefront Sensing & Control
- PAM = Precision Alignment Mechanism
- PAME = Precision Alignment Mechanisms Electronics
- PIE = PAM Interface Electronics
- PCD = Power Conditioning & Distribution
- SSP = Starlight Suppression Processor (GSFC WPC)
- SSR = Solid State Recorder

EDU Availability

All avionics except DME are NOT Vac-compatible

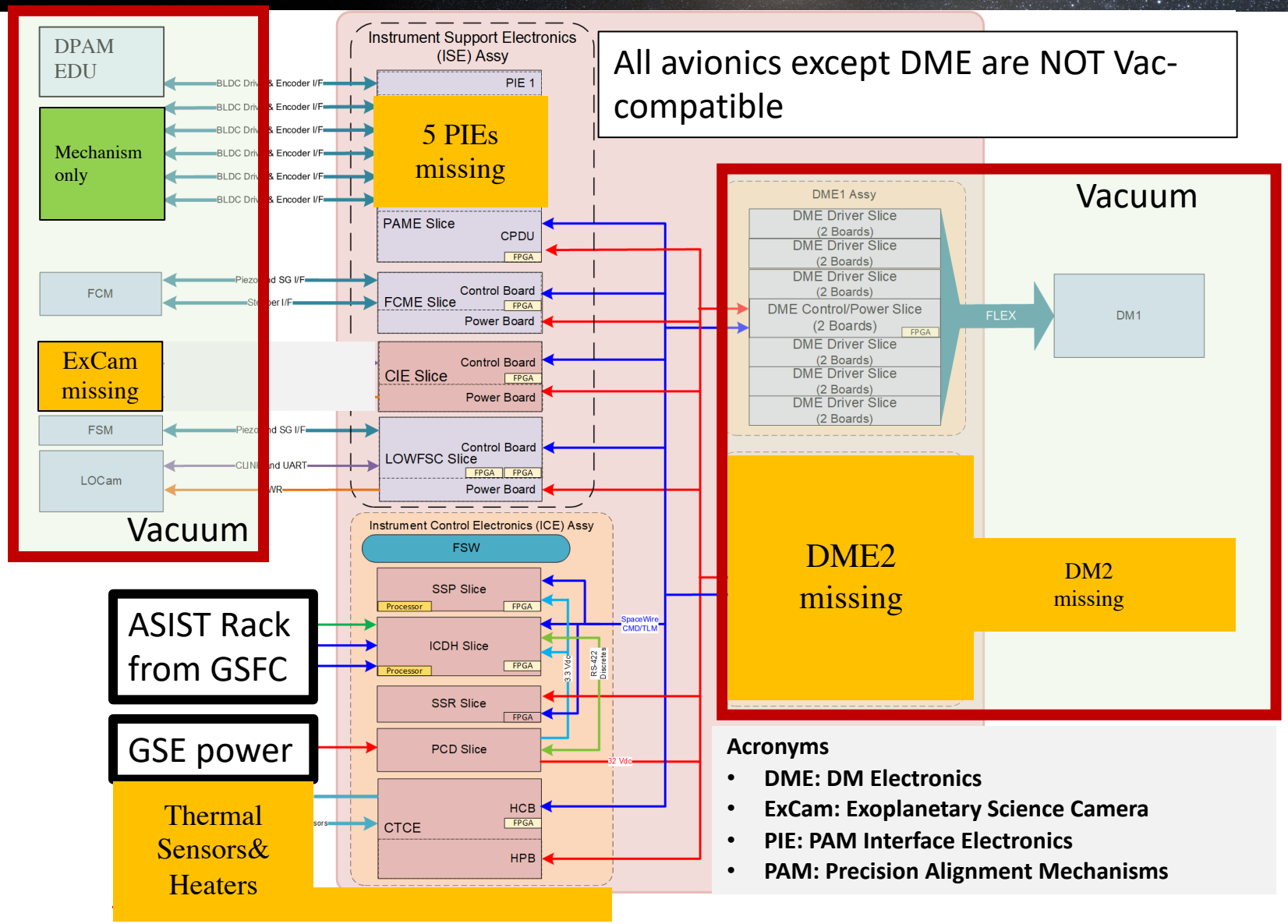

Acronyms

- **DME: DM Electronics**
- **ExCam: Exoplanetary Science Camera**
- **PIE: PAM Interface Electronics**
- **PAM: Precision Alignment Mechanisms**

System Testbed & EDUs In FSW Test Mode

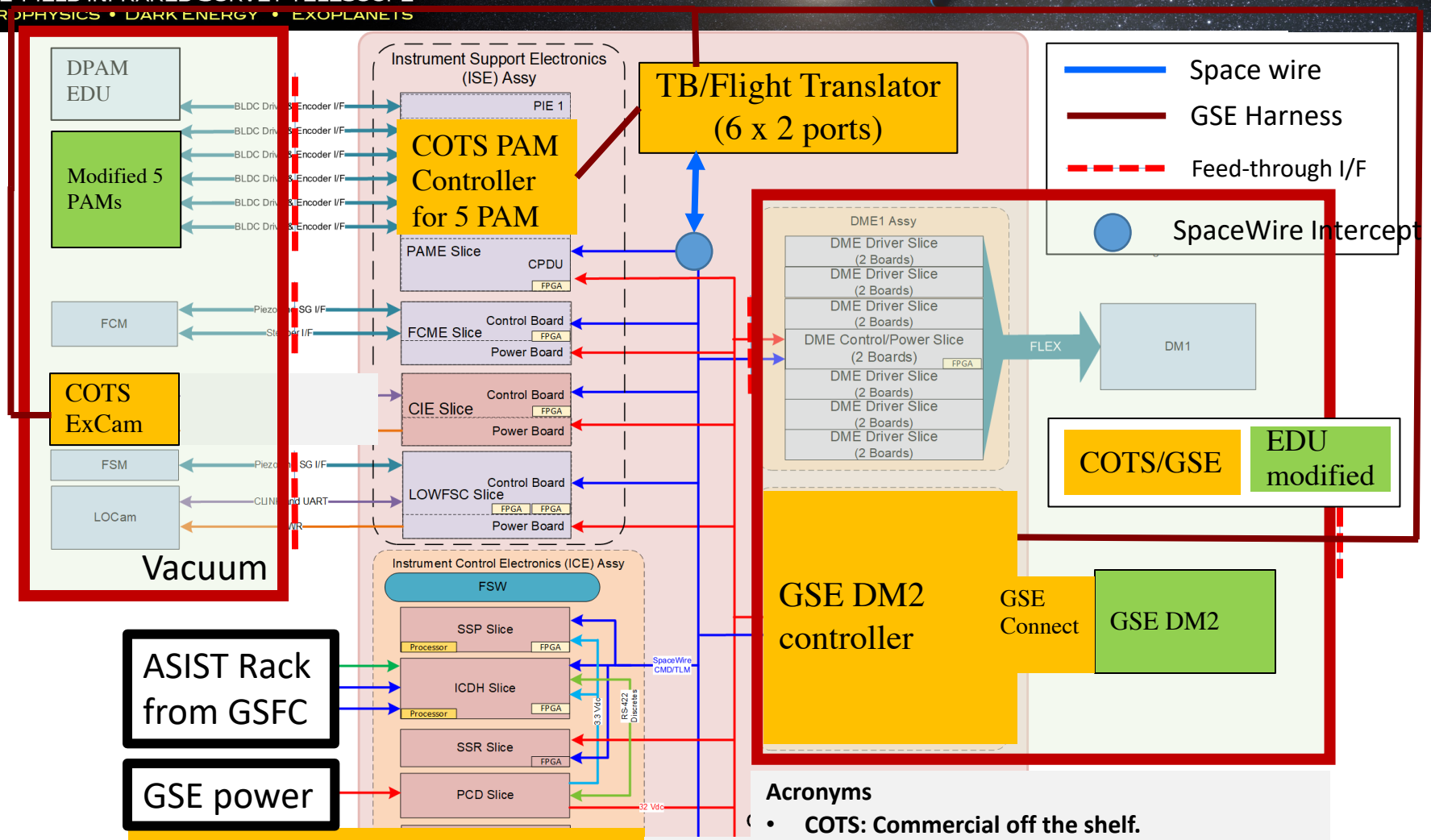

Acronyms

- **COTS: Commercial off the shelf.**
- **GSE: Ground Support Equipment**
- **ASIST: Advanced Spacecraft Integration and system test**

System Testbed & EDUs In GSE Algorithm Test Mode

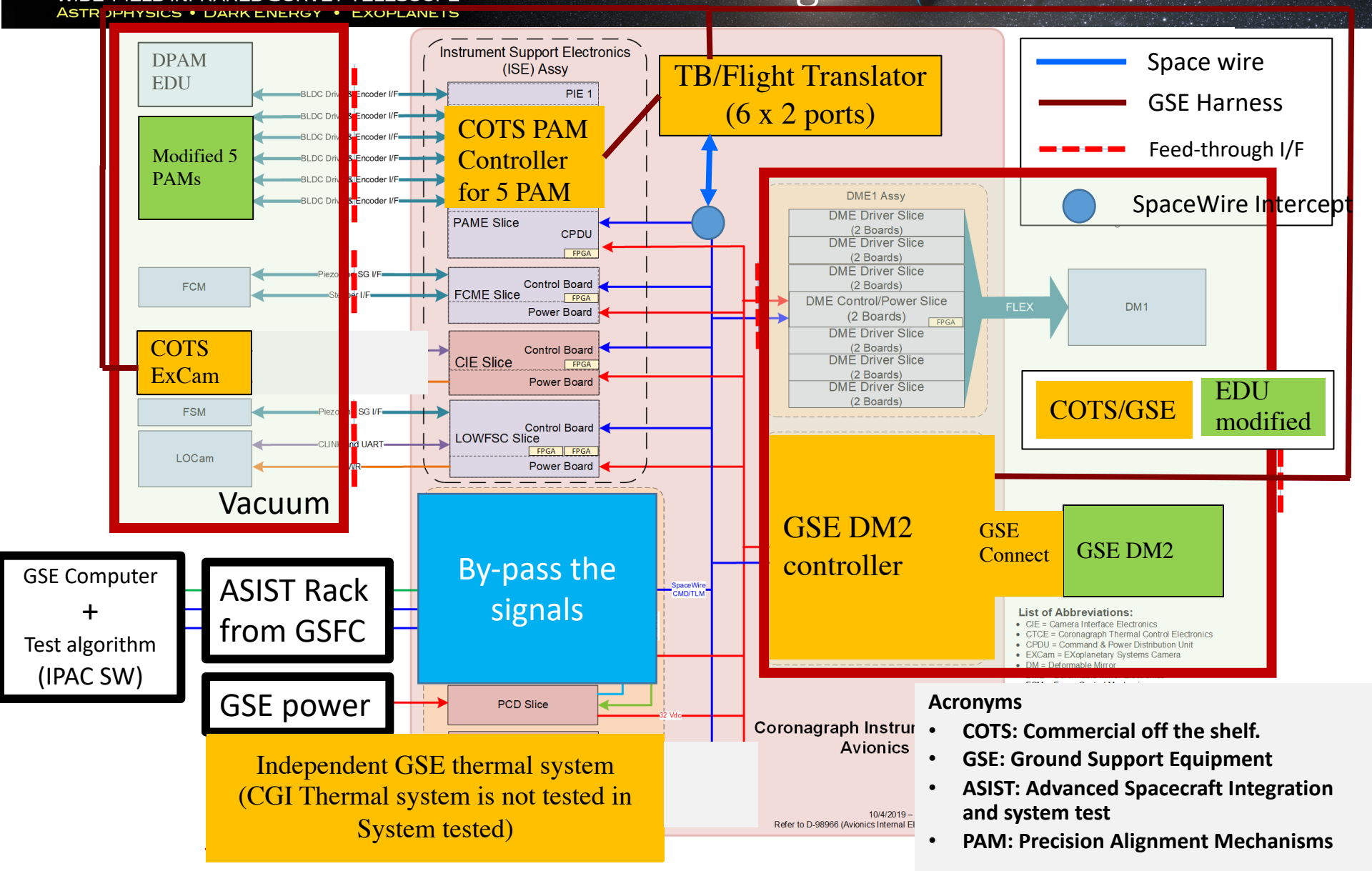

GSE Computer + Test algorithm (IPAC SW)

ASIST Rack from GSFC

GSE power

Independent GSE thermal system (CGI Thermal system is not tested in System tested)

Acronyms

- **COTS: Commercial off the shelf.**
- **GSE: Ground Support Equipment**
- **ASIST: Advanced Spacecraft Integration and system test**
- **PAM: Precision Alignment Mechanisms**

System Testbed & EDUs In GSE Algorithm Test Mode

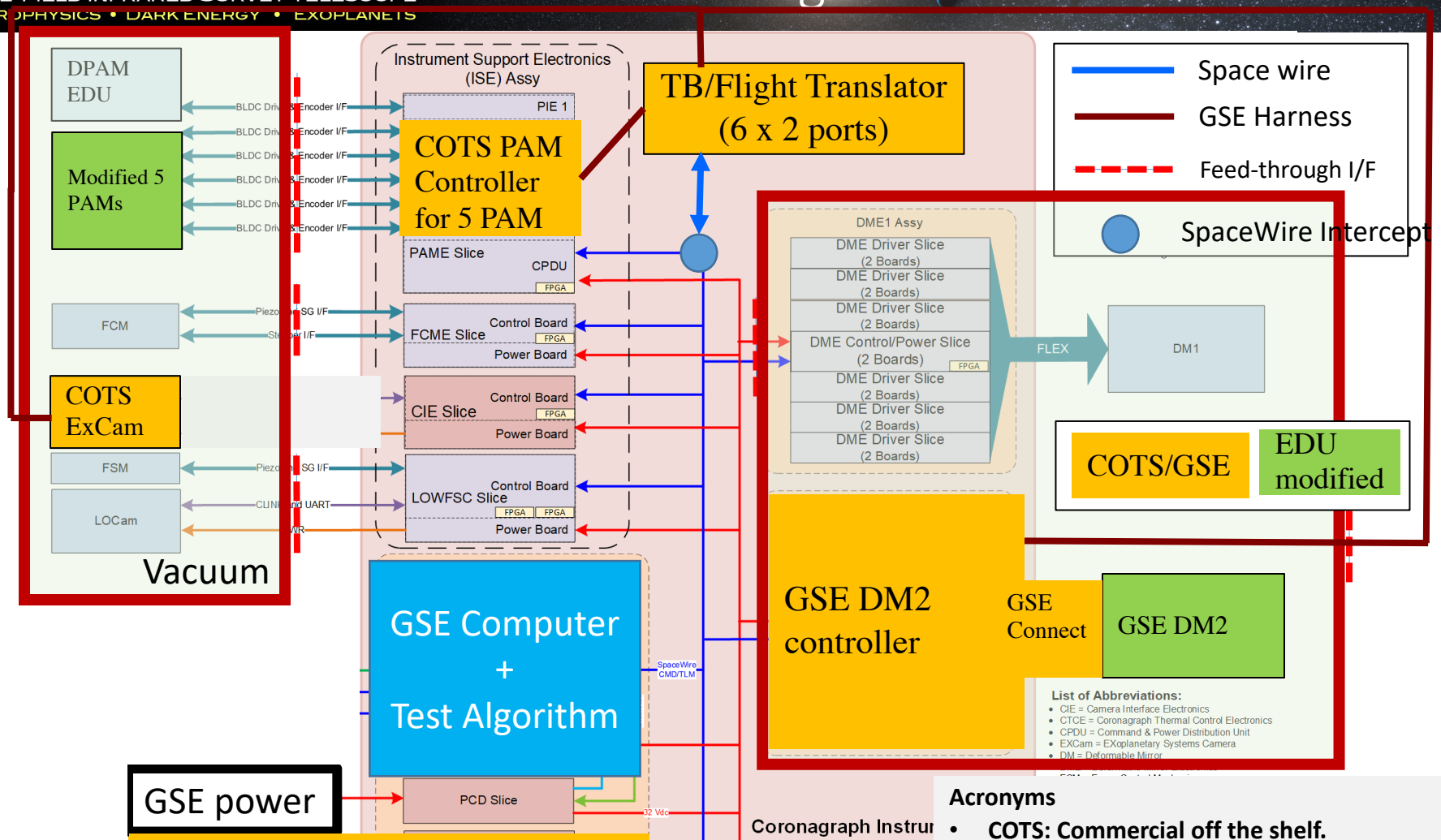

Independent GSE thermal system (CGI Thermal system is not tested in System tested)

Acronyms

- **COTS: Commercial off the shelf.**
- **GSE: Ground Support Equipment**
- **ASIST: Advanced Spacecraft Integration and system test**
- **PAM: Precision Alignment Mechanisms**

System Testbed

✓ H/W Features

- Most Avionics EDUs are outside chamber interfaced through Vacuum feed-through except DM1 Electronics EDU.
- Unavailable EDUs are replaced with COTS (Commercial Off-The-Shelf) H/W.
- STB can work with COTS H/W by intercepting the SpaceWire communication between ICDH (Instrument Control and Data Handling) slice and HW controller/driver slices.
- CVS (CGI Verification Stimulus) is installed and tested in STB before delivery to CGI I&T. STB uses OTA-Simulator afterward.
- FSM EDU with flight-like mount and FCM EDU can be installed after a limited testbed optical reconfiguration.
- 1 available Camera EDU for LOCam (LOWFS Camera). COTS EMCCD for ExCam.
- Employ one existing fully populated DPAM EDU. Have 5 other PAMs by adding/installing GSE optics/masks to 5 existing PAM Mechanisms.
- Inherit the spacecraft simulator (ASIST rack) from FTB

✓ S/W Features

- Can test FSW (Flight Software) and FPGAs. In addition, we can operate STB using GSE computers with any test algorithm (IPAC SW or current testbed SW).

✓ Test Capability

- FSW & Avionics test with optical feedback and performance assessment.
- LOWFSC/FSM and LOWFSC/FCM loop test including the FPGAs.
- A representative HOWFS loop test (COTS EMCCD Camera for ExCam and 1 GSE DME)
- All 6 PAM with 1 slice of PIE (PAM interface electronics) test.

Jet Propulsion Laboratory
California Institute of Technology

Performance Testbed Test Plan …

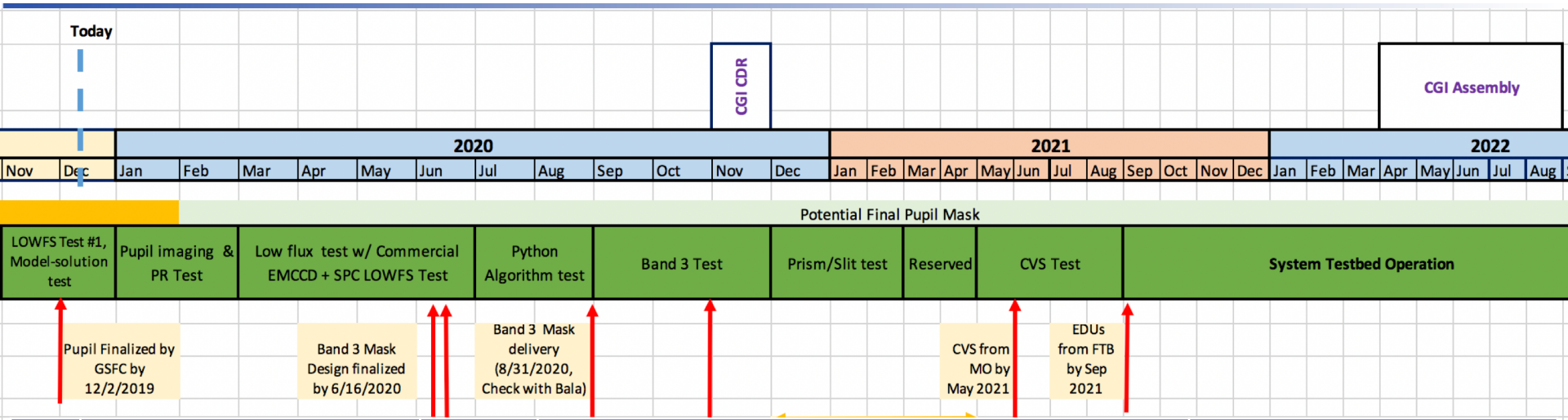

	Test Title	RISK ID	Objective	Comment
	LOWFS Test		• Validate LOWFS model in terms of sensitivities such as star spectrum change. • Exercise star acquisition scenarios. • New concepts of SPC/FPM bow-tie mask (FS substrate, tilt, or blacken)	• No risk ID is assigned. • Progress Report in Collection-1760924.
	Pupil image quality Test	27	• Understand where the image quality disagrees with modeling prediction. (model validation)	• We insert 'predefined structures' in Pupil and SPMA as a fiducial.
	Phase Retrieval Test	62	• Test Phase Retrieval capability with same # of images, Low flux, same bandwidth. • Feedback to OM to determine the specs for the PR imaging lens.	
	EMCCD DICam Test	85	• Understand EMCCD characteristics for HOWFS. • We re-evaluate the low flux operation performance (SPIE2018) in flight-like read noise environment.	• Use iXon Ultra 888 (Andor) in photon counting mode. Same E2V chipset as flight.

Jet Propulsion Laboratory
California Institute of Technology

...Performance Testbed Test Plan

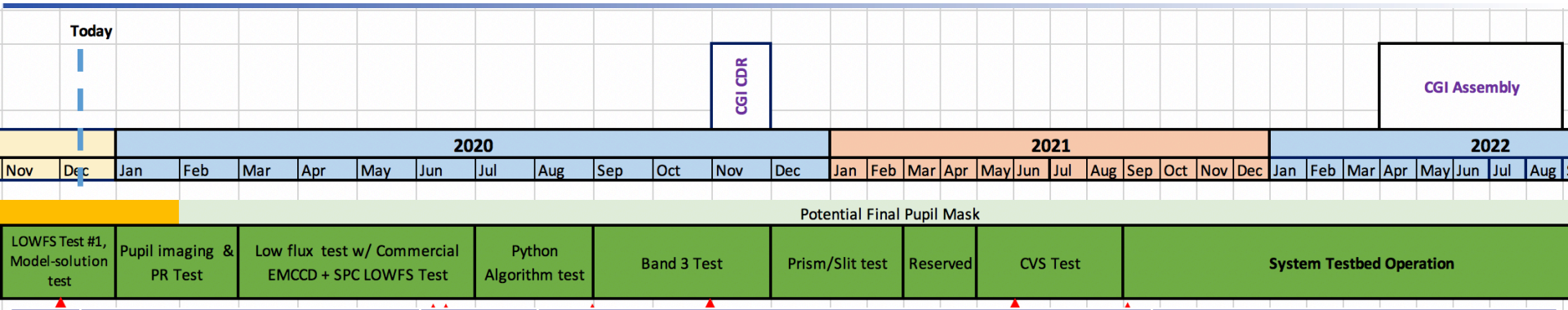

	Test Title	RISK ID	Objective	Comment
	Python Algorithm Test	62	• WFC will deliver python codes to FSW. • Testbed will obtain the python code to test it after its first delivery.	We need to build the interface codes to H/W.
	Band 3 test	1, 21	• Band 3 & Band 4 have not been tested for Phase B pupil. Cancel Band 4 test since it is not driving anything. • Pupil registration sensitivity modeling validation. • Pupil imaging quality validation	• SPC masks EOD on Feb. 2020 • These bands are dominating the pupil registration sensitivity. • Use current 2 slot-config on SPAM. No more phase mirror
	Slit & Prism Test	62	• Demonstrate the Slit & Prism concept in the system-level.	• Tylor will deliver EDUs by 10/21/2020. • The prism has the imaging lens. Testbed's imaging lens requires to match to flight. • **AI: Check DPAM/PAME is available by When (Joon)**
	CVS Test	62	• Test CVS before delivery to I&T. • Use 46.3 mm aperture. • Need to remove TB from chamber (Remove IFS)	• **AI: Check CVS fits to current Chamber (Eduardo)**

BACKUP

Avionics EDU Plan

- **Current availability**
  - Most Avionics are available.
  - 5 PIE and 1 DME (and 1 DM) are missing.
  - Most Avionics are NOT vacuum compatible except DME.
- **Plan**
  - All Avionics EDUs except DME are outside chamber interfaced through Vacuum feed-through.
  - 5 PAMs are driven by COTS driver through feed-through.
  - COTS EMCCD ExCam is driven by COTS driver.
  - Existing DM+DME set is used for DM1.
  - Existing GSE DM+DME set is used for DM2.

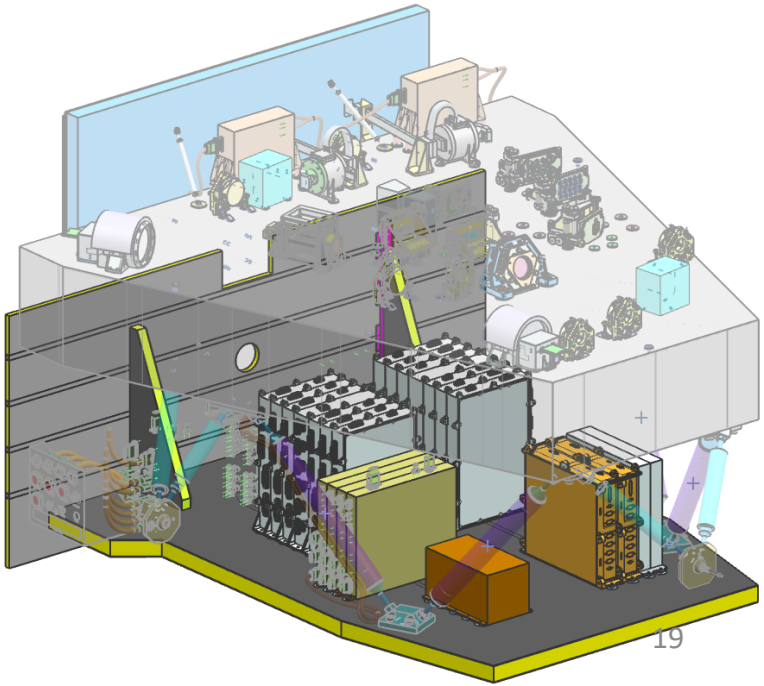

FSW & FPGA EDU Plan

- **No modification of FSW. No extra actions on FSW team.**
- **No modification of any of FPGAs. No extra actions.**
- **PTB has SpaceWire/Ethernet Bridges (https://www.gaisler.com/index.php/products/systems/gresb) to hijack the SpaceWire connection from/to sub avionics units. (Total 6 ports).**
- **PTB writes a translator S/W, which interprets/reroutes the avionics signals to COTS H/W.**

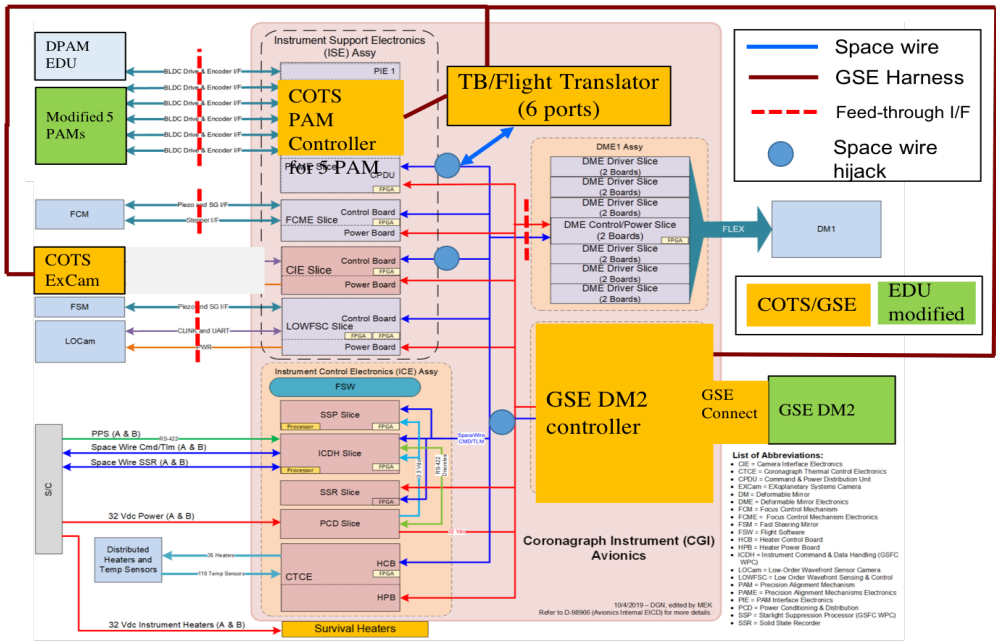

FSM & FCM EDU Plan

- **Current availability**
  - FSM EDU is available. Belinda: FSM mount to tilt it is not in the plan. GSE mount to tilt the FSM has some funding under CVS account. Action: Need to work out. Need to consider first mode of the mounted FSM for LOWFS testing.
  - FCM EDU is available.
  - OAP2/mount is likely available (under negotiation with LAM)
    - OAP2 (with hole) needed May 2021. If not can buy from US vendor.
  - Action: understand the plan for OTA-Sim after CVS is delivered for flight I&T. Is the FSM still tilted or not?
  - Action: need to do fit check whether PAMs can fit into the current PTB optical layout. One possibility is to not use some PAM EDUs that do not fit, keep COTS mechansims.
- **Plan**
  - Install FSM EDU when we install CVS.
  - Add/install GSE flat optics to FCM EDU.
  - Complete LOWFS loops including avionics, LOCam except the FCM GSE Flat

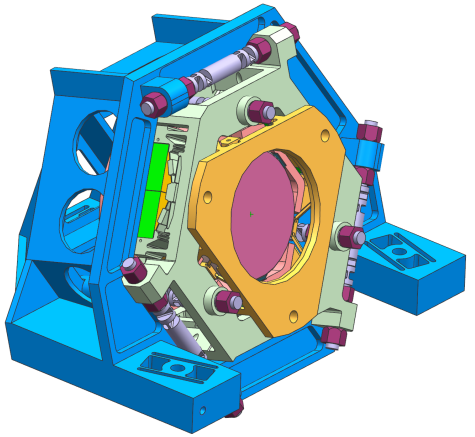

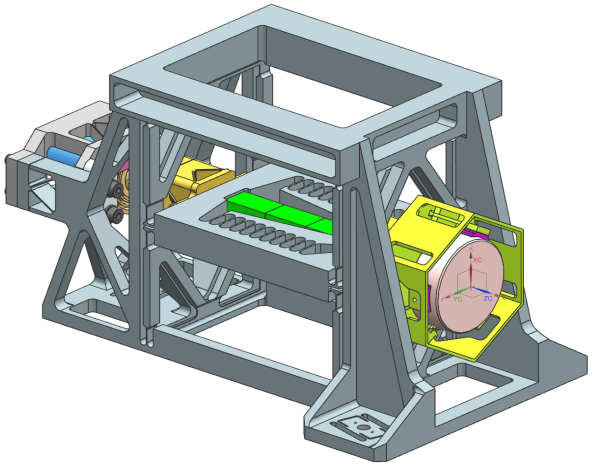

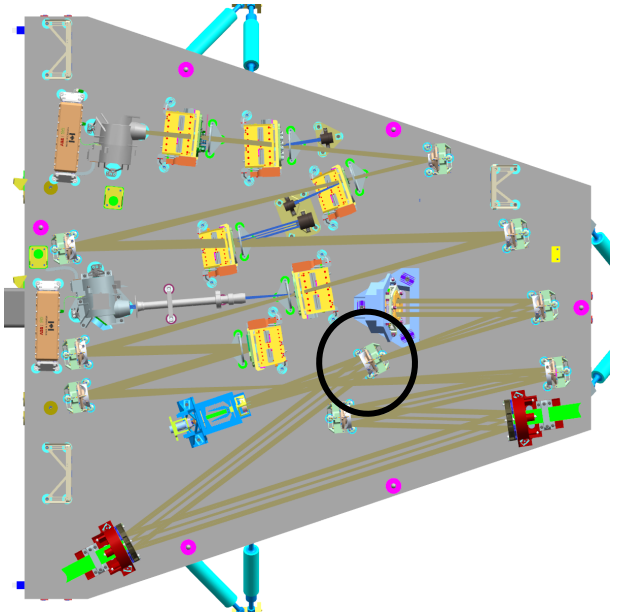

Parameter	Flight	Testbed	unit	Note
DM Influence function file location	??	(hcim git) hcim/efc/Support/influence_dm5v2.fits'		
Spacing of actuators on each DM	??	0.99 (TBR)	mm	
AOI at FPAM	5.5	6.69	degree	designed
AOI at DM1	9.65	10	degree	designed
AOI at DM2	9.65	8	degree	designed
AOI at SPAM	7.5	8	degree	designed
AOI at LSAM	7.5996	12	degree	designed
Pupil D in DM1	46.30 x 46.54 (full width geometric)	46.3	mm	designed
DM1 obscuration size	?? can down scale from OD	No obscuration	mm	
DM2 obscuration size	??	No obscuration	mm	
Pupil D in SPAM	17.00x16.99 (full width geometric)	19.602	mm	Source unknown
Pupil D in lyotstop	17.00x17.00 (full width geometric)	19.393	mm	HLC design
Exit Pupil	5.08 x 4.97 (full width geometric)		mm	
Beam print on CFAM	5.07 x 5.04 (full width geometric)		mm	
F/# at FPAM	F/32.25 x F/32.69 [X x Y]	31.681		measured
F/# at DICam	F/51.21 x F/51.69 [X x Y]	102.582		measured
F/# at FSAM	F/41.66 x F/42.20 [X x Y]	31.681		measured
Magnification, FSAM/DICam	1.23	3.238		measured
Magnification, DM1/SPC [SPAM]	0.42	2.362		
Magnification, DM1/Lyotstop		2.388		
Pixel Per L/D on DICam	2 @500 nm	8.680	pixel/ l/d@550nm	measured
um per L/D on DICam	26	56.420	um/ l/d@550nm	measured
um per L/D on FPAM		17.424	um/ l/d@550nm	measured
FPM Substrate Thickness	6.35	6.350	mm	designed
Ti layer thickness	??	3.000	nm	
Ni layer thickness	??	109.000	nm	
DI Lens (air-spaced doublet), f	260		mm	
DICam pixel size	13	6.500	um	designed

blue: designed value
red: measured value
orange:guessed

PAM & PAME EDU Plan

- **Current PAM availability**
  - DPAM EDU is available.
  - Other 5 PAMs have mechanisms only with no optics.
  - Only 1 PIE is available.
- **Plan**
  - Employ one existing fully populated DPAM EDU.
  - Add/install GSE optics and masks to 5 other PAMs.
  - DPAM is driven by PIE EDU.
  - Other 5 PAMs are driven by COTS controller.
- **NOTE**
  - Mask sizes are different from flight.
  - CGI masks for testbed budgeted under AO
  - COTS filters covered by TB budget
  - TBD upper to make plates and install the masks/filters
    - Good practice for AO
  - Comparison chart at **Flight and Testbed Design and Measured Parameters**

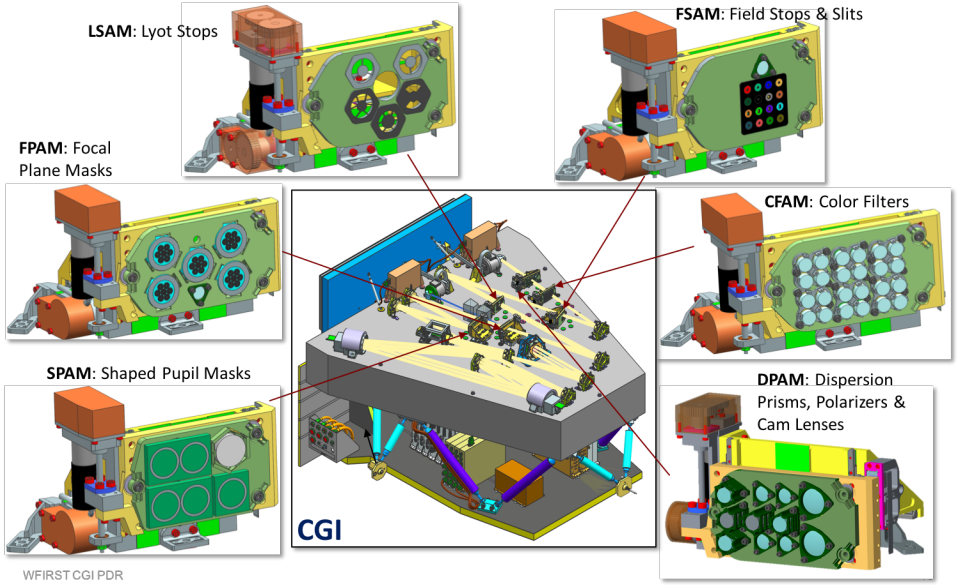

DM and DME EDU Plan

- DM1 (48.1) and GSE DME will be replaced with DM and DME EDU. The DME EDU will be sitting at the bottom under the bench.
  - Which DM will be DM EDU?
  - Needs to be fully finished with coatings, etc.
- The DME will be cooled by water (TBD)
- Working with March Hetzel/Larry Hovland.

- **DM+cabling+DME EDUs will be used in vacuum in both VSG for DM Assy L5 testing and in the testbed.**

DM and DM electronics at current PTB.

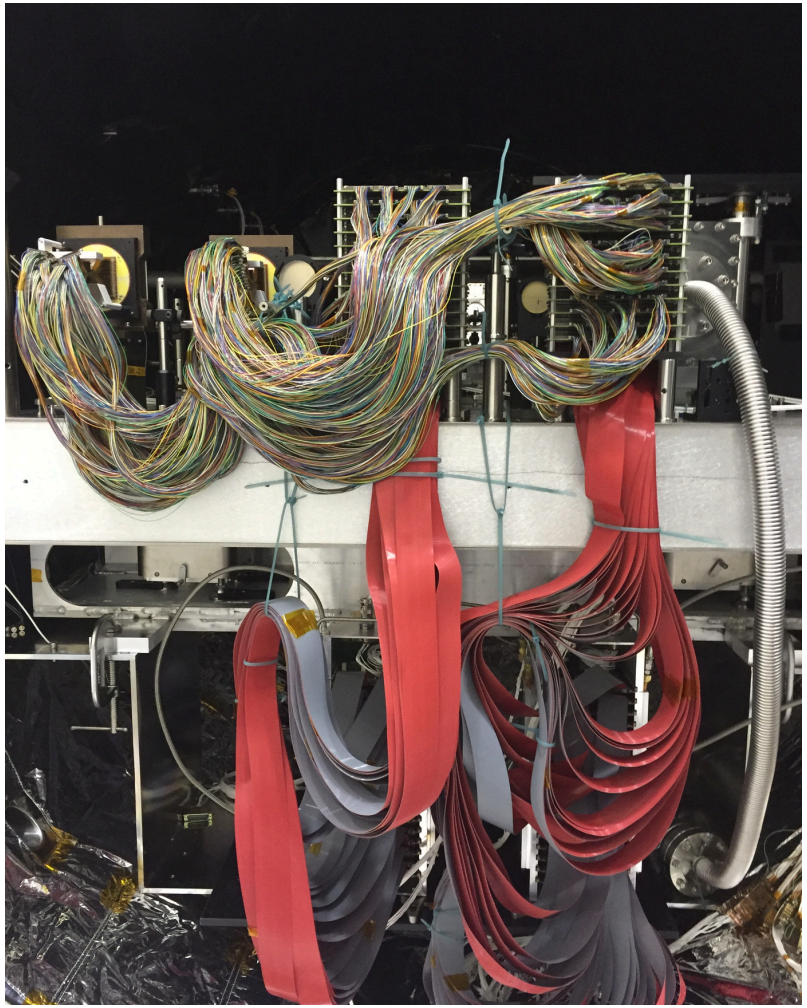

Testbed Configuration

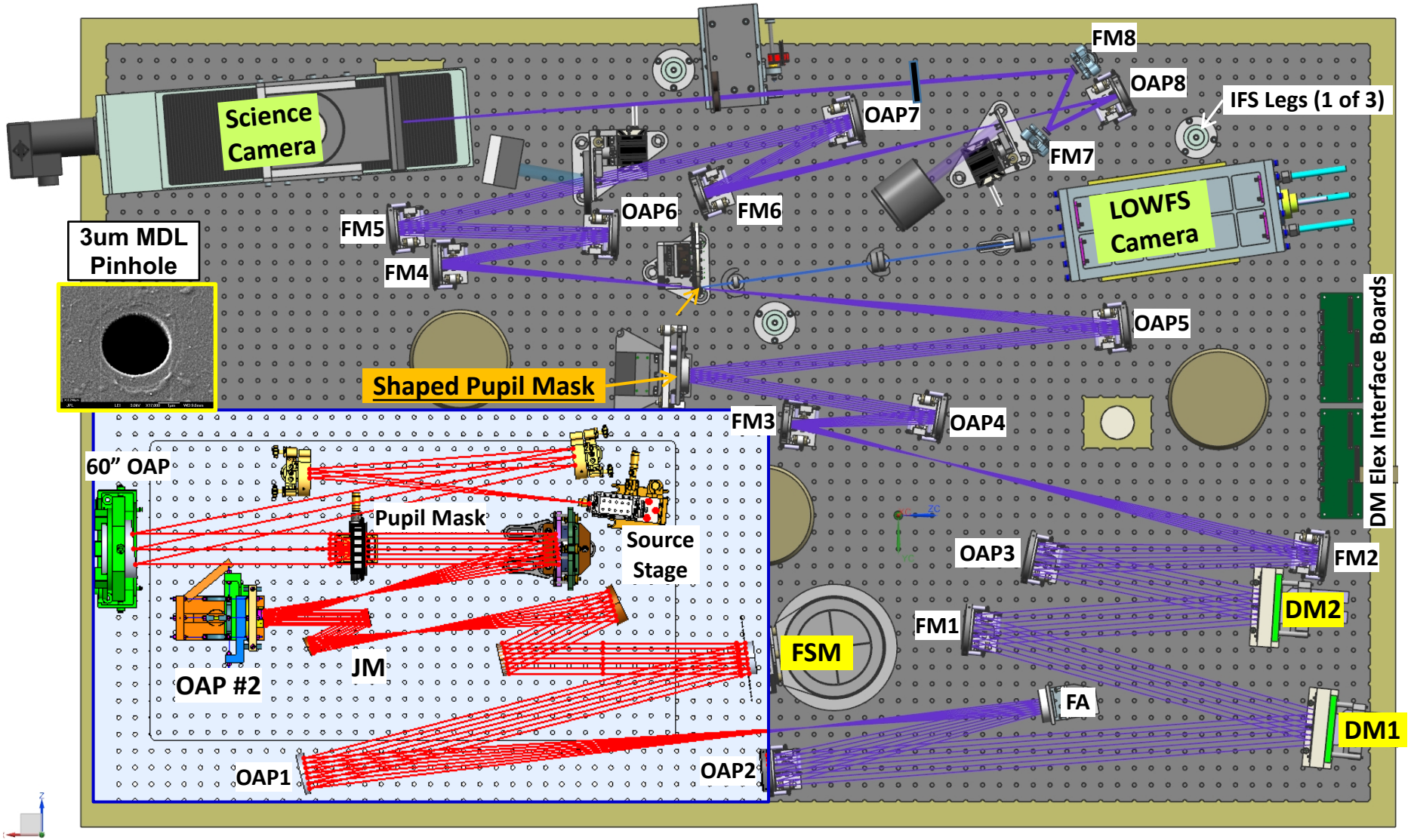

PAMs on CGI

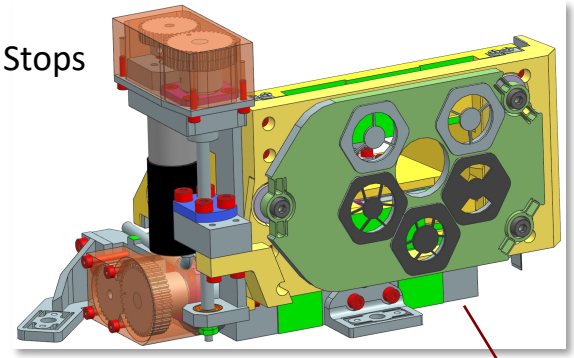
LSAM: Lyot Stops

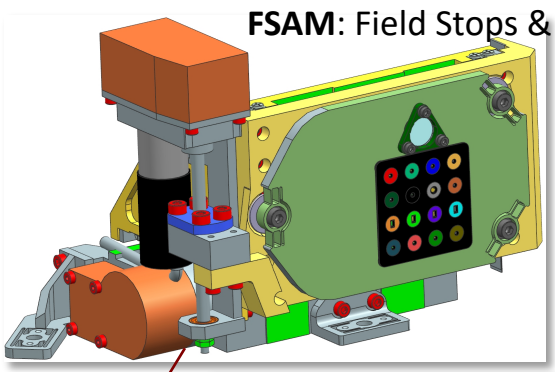
FSAM: Field Stops & Slits

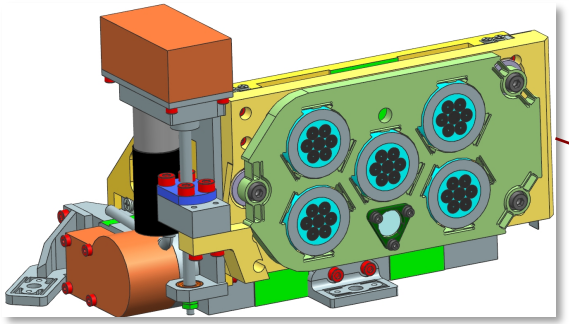
FPAM: Focal Plane Masks

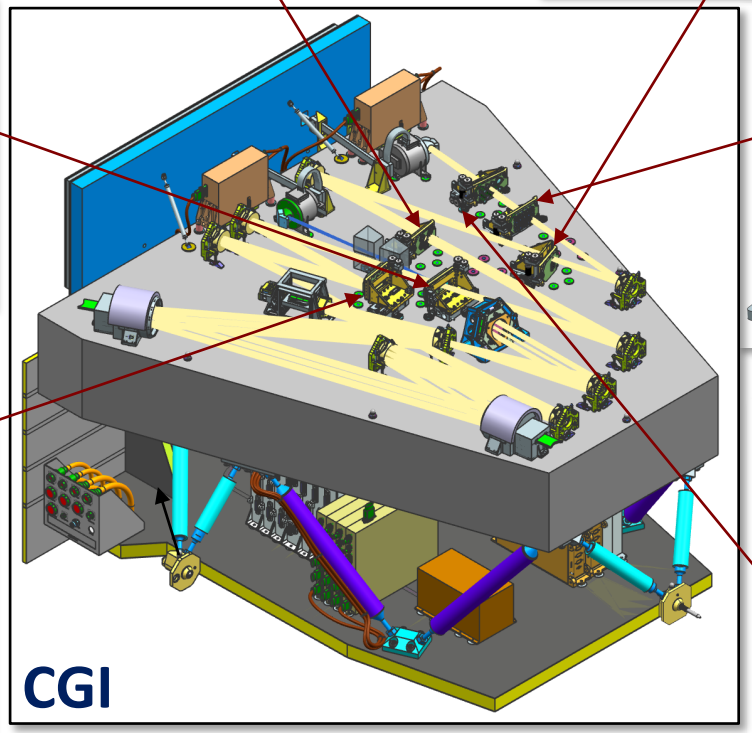
CGI

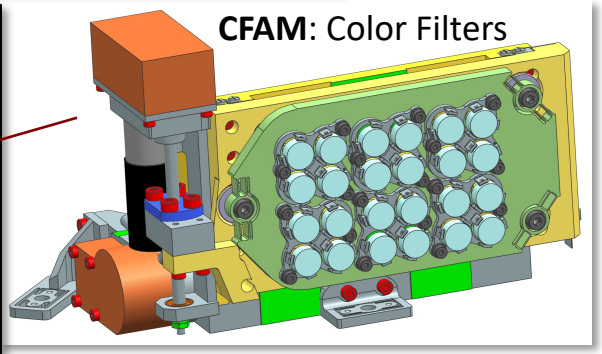
CFAM: Color Filters

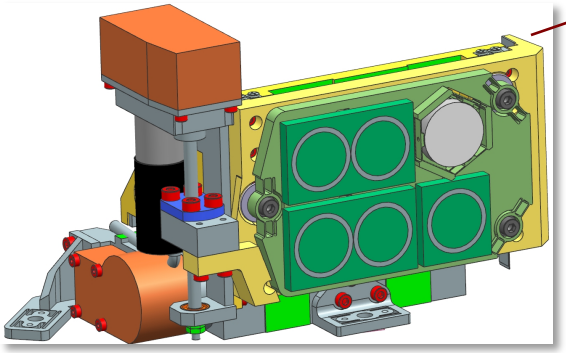
SPAM: Shaped Pupil Masks

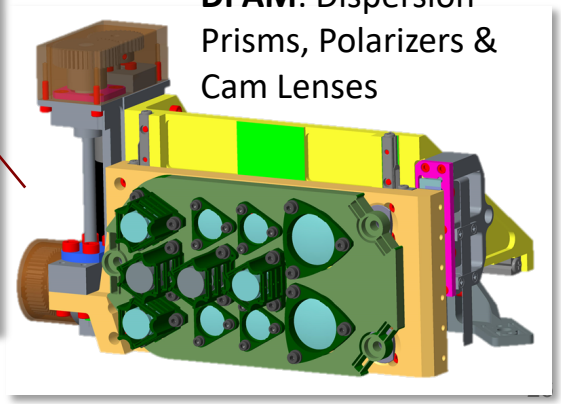
DPAM: Dispersion Prisms, Polarizers & Cam Lenses

Flight vs. Testbed

Parameter	Flight	Testbed	unit	Note
DM Influence function file location	??	(hcim git) hcim/efc/Support/influence_dm5v2.fits'		
Spacing of actuators on each DM	??	0.99 (TBR)	mm	
AOI at FPAM	5.5	6.69	degree	designed
AOI at DM1	9.65	10	degree	designed
AOI at DM2	9.65	8	degree	designed
AOI at SPAM	7.5	8	degree	designed
AOI at LSAM	7.5996	12	degree	designed
Pupil D in DM1	46.30 x 46.54 (full width geometric)	46.3	mm	designed
DM1 obscuration size	?? can down scale from OD	No obscuration	mm	
DM2 obscuration size	??	No obscuration	mm	
Pupil D in SPAM	17.00x16.99 (full width geometric)	19.602	mm	Source unknown
Pupil D in lyotstop	17.00x17.00 (full width geometric)	19.393	mm	HLC design
Exit Pupil	5.08 x 4.97 (full width geometric)		mm	
Beam print on CFAM	5.07 x 5.04 (full width geometric)		mm	
F/# at FPAM	F/32.25 x F/32.69 [X x Y]	31.681		measured
F/# at DICam	F/51.21 x F/51.69 [X x Y]	102.582		measured
F/# at FSAM	F/41.66 x F/42.20 [X x Y]	31.681		measured
Magnification, FSAM/DICam	1.23	3.238		measured
Magnification, DM1/SPC [SPAM]	0.42	2.362		
Magnification, DM1/Lyotstop		2.388		
Pixel Per L/D on DICam	2 @500 nm	8.680	pixel/ l/d@550nm	measured
um per L/D on DICam	26	56.420	um/ l/d@550nm	measured
um per L/D on FPAM		17.424	um/ l/d@550nm	measured
FPM Substrate Thickness	6.35	6.350	mm	designed
Ti layer thickness	??	3.000	nm	
Ni layer thickness	??	109.000	nm	
DI Lens (air-spaced doublet), f	260		mm	
DICam pixel size	13	6.500	um	designed

blue: designed value
red: measured value
orange:guessed