Cold Survivable Current Sense Multi-Chip Module

Malcolm Lias, Gary Bolotin, Donald Hunter, Ben Cheng
Jet Propulsion Laboratory, California Institute of Technology
4800 Oak Grove Dr.
Pasadena, CA 91109
Malcolm.Lias@jpl.nasa.gov, Gary.Bolotin@jpl.nasa.gov, Don.Hunter@jpl.nasa.gov,
Ben.Cheng@jpl.nasa.gov

***Abstract* — This paper will present the design of a Current Sense Module (CSM) used to measure motor phase currents that is capable of surviving the harsh ambient environment of ocean worlds, such as Europa and Enceladus. The CSM module is fabricated by i3 Electronics using their Multi-Chip Module (MCM) technology with techniques developed by JPL to allow this module to survive temperatures down to -184°C. This module greatly improves the ability to measure phase and bridge current which can be problematic in extreme environments. In addition, by packaging these electronics at the die level, we achieve significant weight and size savings. This module is one of several modules that employ similar techniques that are integrated into a distributed or centralized motor controller. This paper will discuss the module's design along with a summary of our test results.**

TABLE OF CONTENTS

1. INTRODUCTION 1
2. EUROPA LANDER MOTOR CONTROLLER 1
4. THREE PHASE MOTOR CURRENT SENSING 2
5. CURRENT SENSE MODULE REQUIREMENTS 3
6. CURRENT SENSE MODULE OVERVIEW 3
7. CURRENT SENSE MODULE DEVELOPMENT FLOW 3
8. CURRENT SENSE MODULE BREADBOARD 3
9. CURRENT SENSE MODULE 4
10. AS NEEDED RADIATION SHIELDING 5
11. THERMAL/MECHANICAL ANALYSIS 5
12. CURRENT SENSE MODULE TESTING 5
13. ISSUES FOUND DURING MODULE TESTING 6
14. COLD TEMPERATURE TESTING 6
15. SUMMARY 7
16. ACKNOWLEDGEMENT 7
17. REFERENCES 7
17. BIOGRAPHY 7

1. INTRODUCTION

This work is part of the Europa Lander's Technology Maturation Effort. The effort's goal is to allow a potential Europa Lander to last longer on the surface or allow more room for additional science by reducing the volume, mass and power of its avionics and the amount of energy required to keep the avionics warm.

Landed payload mass of ocean world missions typically require a spacecraft launch mass of 7-10x the landed mass due to the required propellant to get payload to the surface. We address the mass requirement by developing modular standardized Multi-Chip Modules (MCMs), utilizing advanced substrate and System-in-Package (SiP) technologies that can be configured into a compact yet versatile avionics topology that significantly reduces Size, Weight, and Power (SWaP) over previously flown avionics assemblies.

2. EUROPA LANDER MOTOR CONTROLLER

The Current Sense Module (CSM) is part of the Europa Lander Motor Controller. The Europa Lander Motor controller consists of a computer card, a power supply card and enough motor control cards to control 24 motors.

The block diagram of the motor control card is shown in Figure 1. Each motor card can control up to three motors. Only one motor can run at a time per card. Each motor channel uses a current sense module to collect motor current, bridge current, and brake current in addition to telemetry data which includes motor and board temperatures along with four local voltages.

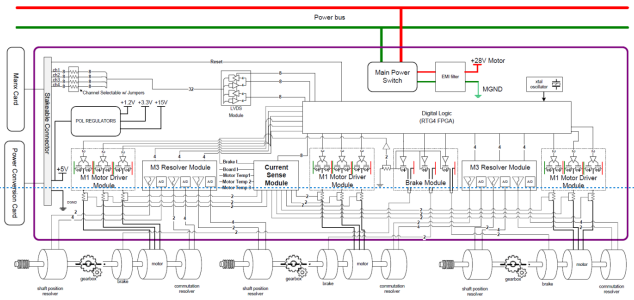

Figure 1: Europa Lander Technology Maturation Motor Control Card Block Diagram

As shown in figure 2, the Motor Control Card is packaged into a single 0.4 kg card with dimensions: 160mm x 100mm x 18mm. Each channel is capable of continuously delivering

California Institute of Technology. Government sponsorship acknowledged.
Predecisional information for planning and discussion only

3 Amps to a motor.

Many functions common to our previous motor controller designs implemented on Mars 2020 and Mars Science Laboratory (MSL) have been packaged into Multi-chip Modules. These functions include: motor drive electronics, resolver electronics, point of load regulation, and current sense and telemetry electronics. These modules allow for considerable miniaturization of the electronics without losing functionality.

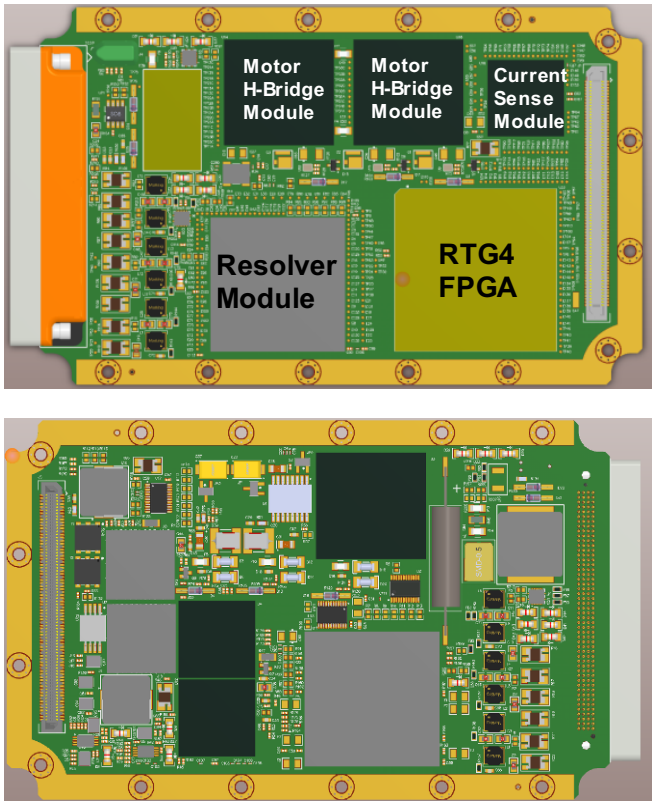

Figure 2: Front & Back Side of Europa Lander Technology Maturation Motor Control Card

The substrate technology selected for the current sense module is the key enabler towards board density reduction. CoreEZ® [4] a high-density substrate fabricated from thin particles containing organic laminates was the alternative to standard PWBs that contain glass cloth reinforced dielectrics.

Figure 3 shows a cross-section comparison of i3's silica particle filled epoxy-based CoreEZ® thin laminate compared to a standard build up PWB. The absence of glass cloth in the dielectric provides several distinct key advantages including; reduction in thickness, tighter core via pitch, and improvements in assembly yields and reliability. It also results in a smoother surface finish on the particle-filled dielectric, enabling higher resolution photolithography for finer line widths and spaces, and improved electrical performance, especially for speed applications.

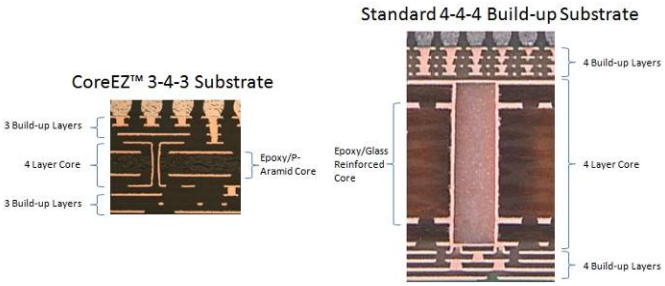

Figure 3: Photographs comparing i3 CoreEZ® MCM technology and standard PWB technologies.

4. Three Phase Motor Current Sensing

In prior missions, such as M2020/MSL, JPL measured only bridge current to determine motor current. The problem with this measurement technique is that it does not accurately track motor current 100% of the time. The motor current circulates in the power MOSFET of the drive circuitry during the unpowered portion of a commanded PWM duty cycle. Current doesn't pass through the current sense resistor during this time period. This makes accurately measuring motor current difficult when the PWM duty cycle is small. The current sense module addresses this problem by accurately measuring the motor phase currents.

As illustrated in figure 4, the current sense module determines motor current by measuring current of two phases of a 3-phase Motor. We are able to determine the current in the third phase by doing nodal analysis at the motor and applying Kirchhoff's law:

$$\text{Phase A} + \text{Phase B} + \text{Phase C} = 0$$

Accurate motor current measurement enabled by our current sense module are useful in torque control because motor current is proportional to motor torque:

$$I_{Motor} = \alpha * \tau$$

These current measurements enable current control techniques not possible in the M2020/MSL design. Current control is generally preferred over voltage control because voltage is out of phase with current when driving an inductive load such as a motor. The ability to control current puts you in phase with the actual mechanism that drives the motor. The current measurement is also important in fault protection. It's not uncommon for a motor to have a phase-to-phase resistance of less than 1Ω. On a 28 volt bus, it is possible to see currents in excess of 20A which are capable of burning out a motor. Current limiting enabled by our current sense modules is necessary to prevent this from happening.

.

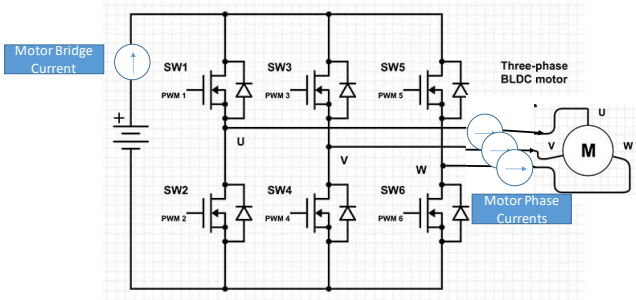

Figure 4: Motor Current Measurements

5. Current Sense Module Requirements

The following table shows the requirements for the current sense module. The table list environmental, voltage, current and sensing requirements.

1	300KRad Tolerant
2	-184°C Storage temperature
3	Capable of continuously monitoring motor phase current, brake current, and heater current
4	4 Voltage Sensors
5	2 PRT Temperature sensor channels
6	1 Spare ADC input
7	2 Spare current sources
8	Compact 1.8 cm x 1.8 cm module
9	Mass < 2gram

Table 1: Key Current Sense Module Requirements

6. Current Sense Module Overview

The current sense module's function is to digitize the motor phase currents along with collecting telemetry for the Motor Control Card. As illustrated in figure 5, the current sense module contains two Analog to Digital Converters (ADC) and associated signal conditioning circuitry. This circuitry handles the current monitoring and housekeeping needs of one motor channel. This is accomplished with two high side bi-directional current sensors for motor phase current and two low side current sensors for brake current and motor bridge or heater current.

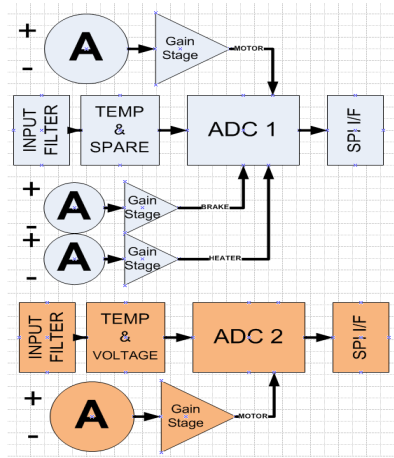

Figure 5: Current Sense Module Block Diagram.

7. Current Sense Module Development Flow

Figure 6, illustrates our development approach. We first developed the design and ran simulations to finalize the design. We then constructed a breadboard to validate the design prior to beginning the module development. The module was tested using a socketed test board utilizing a zero insertion force socket so that the module is not physically damaged during testing. The module was then run through system testing before integration into the Motor Control Card.

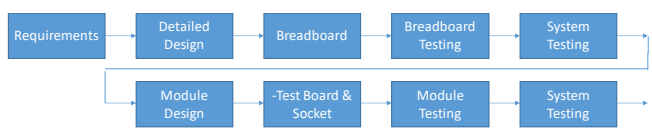

Figure 6: Development Flow

8. Current Sense Module Breadboard

As illustrated in figure 7, we initially constructed a breadboard of the module design utilizing conventionally packaged surface mount components to validate the design and mitigate risk. To facilitate testing the breadboard, we included our motor driver design. This provided a means to test the current sense module's ability to sense current in a realistic switching motor drive environment.

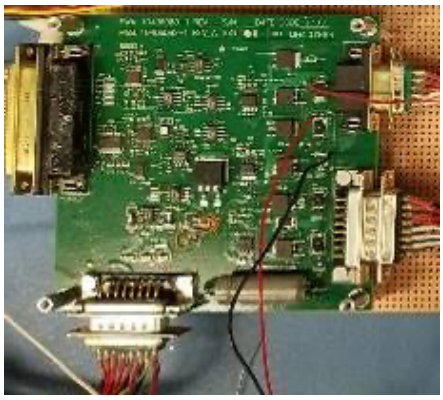

Figure 7: Current Sense Module Breadboard

The initial current sense module breadboard testing included calibrating the motor phase, bridge current, brake current, voltage sensors, and temperature sensor circuits. This testing focused on measuring the calibration constants along with the linearity of the circuitry. The following figures illustrate the calibration curves for the motor phase currents and the bridge current measurements.

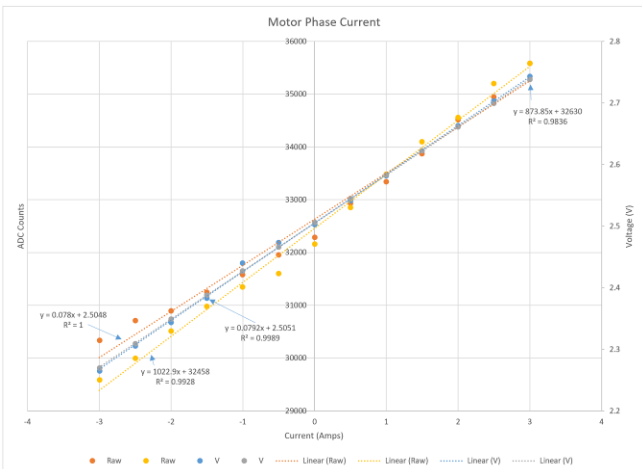

Figure 8: Measured vs Actual - Motor Phase Currents

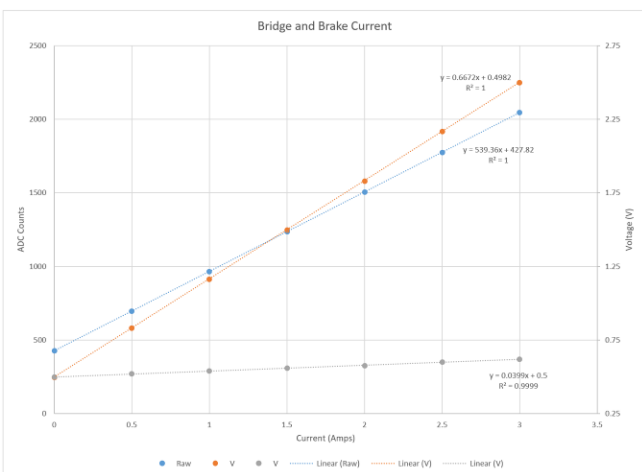

Figure 9: Vout vs Iin for Bridge and Heater Currents

As illustrated in figure 10, our current sense breadboard was then tested with the other motor control modules that make up our motor control card. This motor system testbed included:

- Motor with Resolver for Commutation
- Smart Fusion2 Evaluation Board
- Resolver Module Breadboard
- Arduino Microcontroller

The Arduino Microcontroller simulated the flight control processor and provided the user interface to the Smart Fusion2 FPGA that contained the various algorithms which included the angle tracker, commutation, motor current control algorithms and current limit protection.

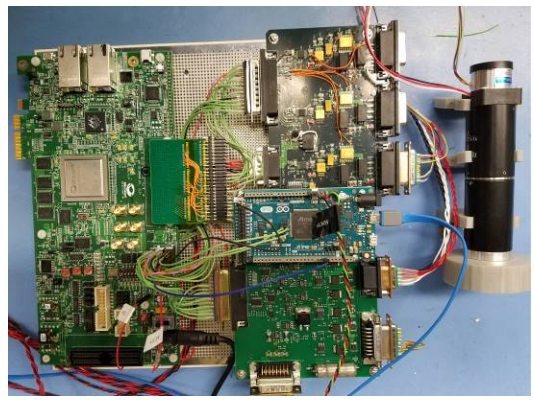

Figure 10: CSM Breadboard under System Test

This breadboard testing allowed us to verify that the operational amplifiers in the design were able to settle fast enough so that we could sample motor current within the PWM period and do so without residual common mode voltage distortion.

9. Current Sense Module

The Current Sense Module consist of 2 12-bit ADCs, 5 rail to rail Op Amps, 1 Analog Switch, 1 5V reference, and a host of 0201 resistors. We confirmed that 0201 resistors are qualified for space and utilized them wherever possible to miniaturize this module's footprint.

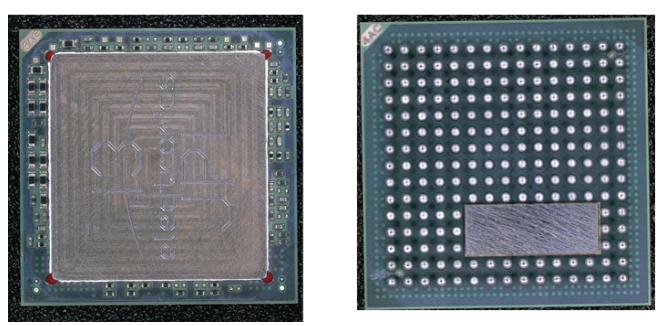

Figure 10: Current Sense Module.

10. As Needed Radiation Shielding

One of the key challenges for our CSM is procuring parts that meet the 300Krad radiation requirement. The voltage reference and the ADC selected for the current sense module have a radiation tolerance of less than 300Krad, requiring additional radiation shielding beyond what is provided by the landed system. As illustrated in figure 11, we developed a means of providing a 360 degree shield for our multichip modules. This technique was originally developed for our Point of Load (POL) regulator module. For the POL, we performed a radiation analysis to show that our three layer shielding design met the total dose radiation mission requirements. This approach consists of three tantalum elements: a BGA shield, a die shield and a top cover shield, which also serves as a protective cover for the wirebonds during testing and handling. Tantalum was chosen over traditional Aluminum because of its radiation shielding properties.[6] The additional weight of the shield was mitigated by keeping the shields as small as possible, shielding only the die that required additional shielding. Even with the shielding, we were still able to meet our mass requirement.

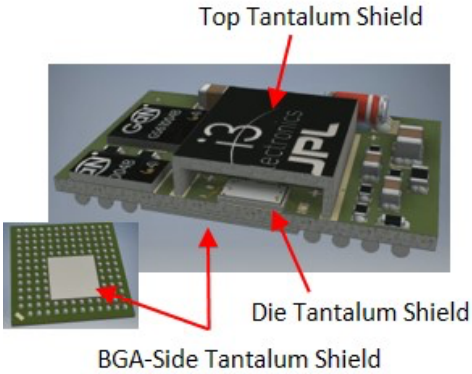

Figure 11. Cross Section of CSM Illustrating Shielding Approach

11. Thermal/Mechanical Analysis

An electrical, thermal and mechanical analysis was performed by i3 Electronics. The thermal evaluation considered substrate affects over temperature and component junction temperatures based on steady state power of 0.324 W for active components. As shown in table 1, all component junction temperatures were well within the mil-spec temperature range.

Power Input (W)	10% I^2R	BGA's @ 50°C	Ambient (°C)	Max T_j (°C)	Component w/ $T_{j\,max}$	Θjb (°C/W)	Comments
0.324	No	All	50.00	51.20	U2	3.69	T_{max}=51.802°C @ R99
0.3564	Yes	All	50.00	51.25	U2	3.51	T_{max}=51.873°C @ R99
0.324	No	TGND Only	50.00	51.47	U2	4.54	T_{max}=52.128°C @ R99
0.3564	Yes	TGND Only	50.00	51.55	SW1	4.35	T_{max}=52.225°C @ R99
0.324	No	All	80.00	81.20	U2	3.69	T_{max}=81.799°C @ R99
0.324	No	All	20.00	21.20	U2	3.70	T_{max}=21.805°C @ R99
Results Plots Included							

Table 1 Current Sense Module Thermal Analysis Results

In addition to the thermal analysis, a mechanical analysis was completed. This analysis showed the mechanical affects related to manufacturing assembly, component attach stresses, wirebonding, radiation shielding attach effect, including test socket related loads. An example of the results of the mechanical analysis for substrate warping is shown in figure 12.

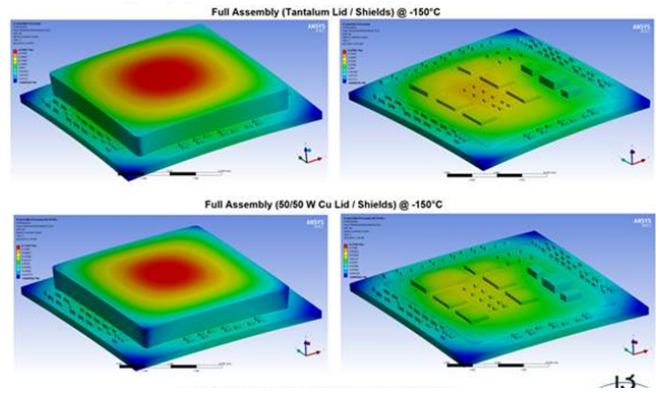

Figure 12. Mechanical Substrate Warping Analysis

12. Current Sense Module Testing

As illustrated in figure 13, we developed a current sense module testboard with a custom Ironwood socket for the module. This allowed us to perform functional tests on the current sense modules prior to being installed into the next assembly. The testboard allows us to conduct safe-to-mate, linearity tests, calibration, and system tests. It has the motor drive design implemented using discrete components in order to facilitate system-level testing.

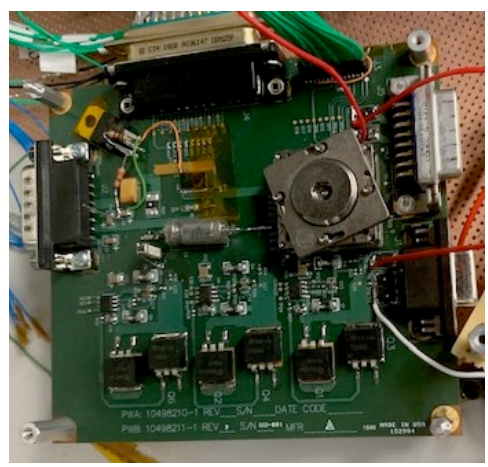

Figure 13: Current Sense Module Test Board

As illustrated in figure 14 and 15, the board test equipment is comprised of a suite of National Instrument cards, a GPIB multi-channel Agilent multi-meter, and power supplies coupled with the current sense module test board. This

setup allows us to automate functional testing. In addition to reducing test time, it yields more consistent and repeatable results compared to performing manual measurements.

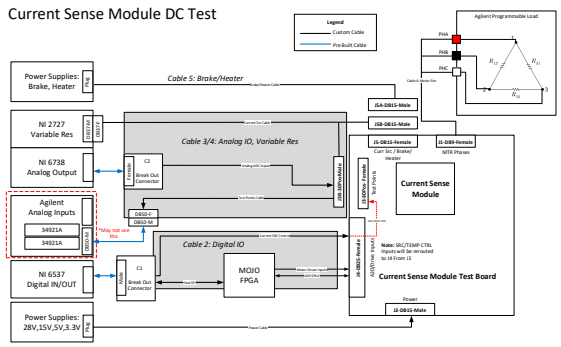

Figure 14. CSM Bench Test Equipment Block Diagram

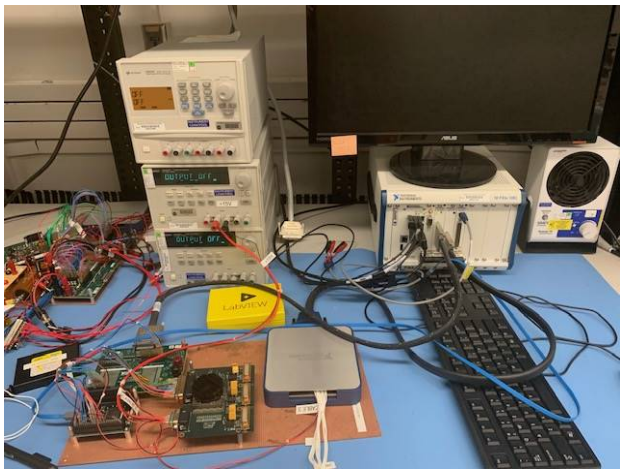

Figure 15: CSM Bench Test Equipment

As illustrated in figure 16 and 17, the current sense circuit shows excellent linearity. We also verified that the module met our accuracy requirement.

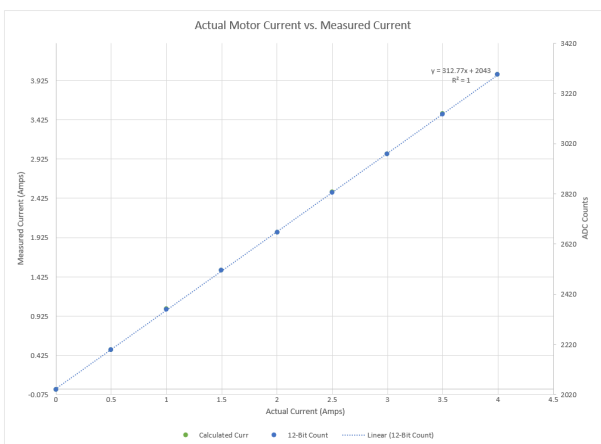

Figure 16: Vout vs Iin for Module Phase Currents

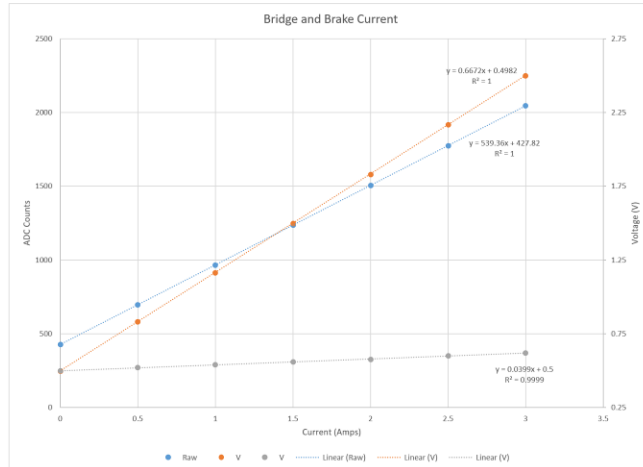

Figure 17: Vout vs Iin for Module Bridge and Heater Currents

13. Issues Found During Module Testing

Initial testing revealed two issues: one quality issue and one design issue. The quality issue was manifested as an inaccurate voltage reference. The failures were traced down to scratches in the op-amp die. Further investigation concluded that these die were likely scratched before installation. Our corrective action was we ordered additional lot inspection at the manufacturer.

The design issue was traced to an internal analog switch. We found that unlike the commercial equivalent part, the space grade analog switch requires -15V. This voltage was not available on the motor control card and we did not want to require another voltage source. The team figured out a work around that eliminated the need for the analog switch. This work around saved the design and eliminated the need to re-layout the substrate.

14. Cold Temperature Testing

Our current sense module is constructed with similar techniques as the motor driver, point of load, isolated converter, and resolver modules. Of all the modules for the motor control card the current sense module is the only module that hasn't gone through the cold survivable testing (100 temperature cycles of -184 to 85°C). We will be testing the current sense module in the future. As mentioned in the previous section, testing of the current sense module has revealed some minor modifications to the design that we will be implementing in future builds. We will conduct the cold survivable test on one of these modules when they become available. We think that there is low risk of failure due to the successful testing of the other modules over the temperature range.

15. SUMMARY

We designed, built, and tested a Current Sense Module that met our goals of improved functionality over present state of practice. The module is capable of surviving the harsh ambient environment of ocean worlds, such as Europa and Enceladus that see temperatures down to -184°C. This module allows us to measure phase and bridge current. Accurately measuring phase current will greatly enhance our motor control designs. In addition, packaging these electronics at the die level achieves significant weight and size saving.

Our exhaustive testing at both the breadboard and module level gives us confidence that the CSM module is ready to be incorporated into future designs. Our target is to have Europa Lander baseline our next-generation motor controller card.

16. ACKNOWLEDGEMENT

The research was carried out at the Jet Propulsion Laboratory, California Institute of Technology, under a contract with the National Aeronautics and Space Administration.

The authors would like to thank the Europa Lander Technology Maturation effort for their continued support along with our past Game Changing and COLDTech sponsors. We would also like to thank Dr. Joe Riendeau for his material consultation and support. Tom Restis, DDI for his support with test PWB design and general PWB knowledge. The i3 Electronics Team: Amanda Schwartz-Bowling, Neil Driver, Dave Caletka, John Barina, Paul Hart and the i3 support staff for their efforts and partnership in this COTS technology infusion, for their invaluable contributions during this project.

17. REFERENCES

[1] D. Hunter, Dr. D. Sheldon, M. Lias, Dr. E. Suh, "Compact Low Power Avionics for the Europa Lander Concept and Other Missions to Ocean Worlds, ECTC 2018 San Diego CA

[2] Gary Bolotin, Malcolm Lias, Donald Hunter, Ben Cheng, "Cold Survivable Distributed Motor Controller (CSDMC)", IEEE Aerospace Conference, March 2019

[3] G. Bolotin, D. Hunter, D. Sheldon, Dr. Yutao He, D. Foor, "Compact Low Power Avionics for the Europa Lander Concept and Other Missions to Ocean Worlds", IEEE Aerospace Conference, March 2018

[4] Neil Driver, Conceive, Believe and Achieve; A Path To Miniaturization, COTS Infusion, and Size Weight and Power Realization for Flight, AAS GN&C Conference: Feb 5 – Feb 10, 2016

[5] Dr. D. Sheldon, "DRD 5X Strategic R&TD Initiative Review – Heterogeneous Device/Packaging Integration Architecture," presented to JPL, Pasadena, CA, August 25, 2014

[6] G. Bolotin, D. Hunter, Martin Ratliff, Dr. Jong-ook Suh, "As Needed Radiation Shielding - System In Package Radiation Shielding", JPL Center Innovation Fund Final Report, July 2018.

17. BIOGRAPHY

Malcolm Lias received his B.S. in Electrical Engineering from Rochester Institute of Technology. He has twenty years of experience developing motor control systems for high reliability applications. Malcolm has been with JPL since 2016. He has experience in all aspects of actuator and servo system control, from actuators, to sensors, commutation techniques, and control. Malcolm is currently responsible for the design and testing of Europa Lander motor control electronics that control the robotic arm and other actuators of the spacecraft.

Gary Bolotin received a M.S. in Engineering from University of Illinois at Urban Champaign in 1985 and a B.S. in Engineering from Illinois Institute of Technology in 1984. He has been with JPL for more than 32 years. He is currently the lead for the Europa Lander Motor Controller. He has also managed engineering teams as both team lead and line manager at the section and group level.

Don Hunter has been with the Jet Propulsion Laboratory and member of the Advanced Electronic Packaging Engineering section since 1993. Major contributions include; development of ruggedized 6U-VME fight system design for the Mars Pathfinder Mission, holds several Cal Tech and US Patents for work in advanced packaging systems architectures. He holds a B.S. in mechanical engineering/Industrial Design from California State University Los Angeles and has been involved in the electro-mechanical packaging environment for over 28 years. He possesses experience ranging from commercial applications of deck top test equipment to military (DOD) cold temperature and high-G integrated packaging applications.

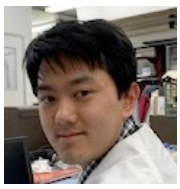

Ben Cheng holds a B.S. in Electrical Engineering from California Polytechnic University, Pomona. He is currently working at NASA Jet Propulsion Laboratory as a member of the Motor Control Card Development Team since 2018. Ben is supporting the test and development of the Europa Lander motor control modules and board designs. Prior to joining JPL, he was the Vice President and a Board of Director for MAG Laboratory (a makerspace) and the head of multiple Robotics-centered student organizations and projects.