Overview of the Compact Integrated Raman Spectrometer (CIRS) for a Europa Lander Mission (415-4)

James Lambert
Jet Propulsion Laboratory
Pasadena, CA

June 27, 2019

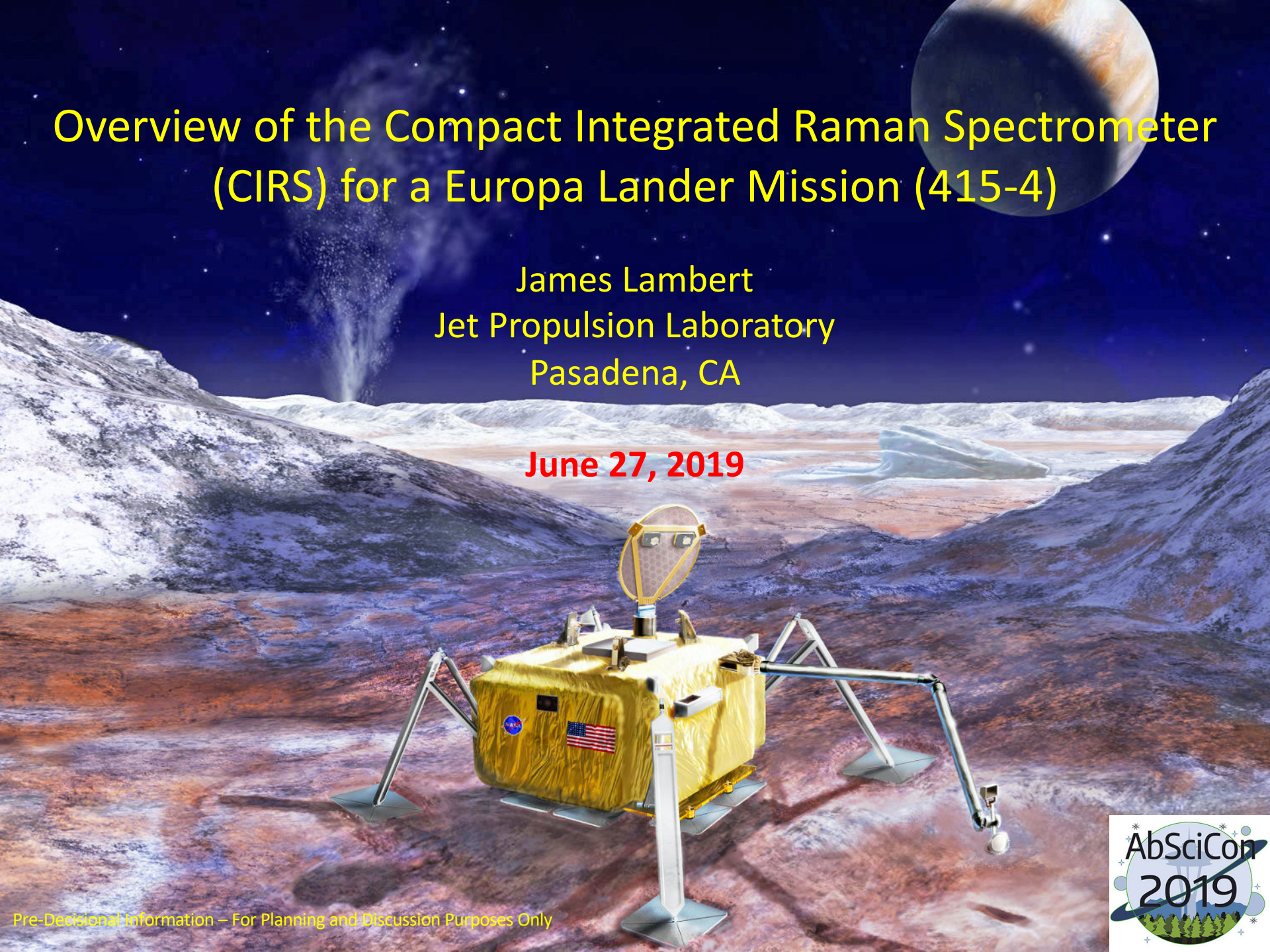

Pre-Decisional Information – For Planning and Discussion Purposes Only

AbSciCon 2019

CIRS Team Members

Science (Washington University in St. Louis)

Alian Wang, Science Lead

Alexander Bradley, Biomarkers and Simulants

CIRS Engineering (JPL)

Jim Lambert (PI), System Engineering

Steve Monacos, Electronics and Software

Michael Pauken, Thermal Engineering

Nicholas Tallarida, Integration and Test

Michael Hoenk, Detector Technology

Steve McClure, Radiation Effects

James Wu, Optical Engineering

Peter Edwards, Data Analysis & Detector Characterization

Sample Handling System (Honeybee Robotics)

Justin Spring, Sample Handling Engineering

Detector and Detector Electronics (University of Leicester)

Ian Hutchinson, Postdocs: Melissa McHugh, Hannah Lerman

Ph.D. Student: Lauren Doherty

CIRS SCIENCE TRACEABILITY

Goals	Objectives	Investigation	Measurement
1 Search for Evidence of Life (past or present)	**1A** Identify & characterize organic molecules	**1A1** Determine abundance levels of organic compounds. ID any biogenic patterns	Using scanning, collect spectra across the field. ID organic compounds via Raman peaks and estimate local and bulk abundances.
		1A2 Determine abundance and enantiomeric rations of amino acids	Using point counting collect Spectra. ID amino acids via Raman peaks and estimate local and bulk abundances
	1B Identify & characterize structural, compositional, morphological or textural indicators biogenic activity	**1B3** Determine structural, compositional, or functional indicator of life	Using UV and Blue LED excitation, collect context images or sample. ID textural and/or fluorescent features that may be of biological origin. Collect spectra at regions of interest using Raman spectrometer
	1C Identity & characterize inorganic indicators	**1C1** Detect and characterize any putative biominerals	Identify putative biomineals (e.g. SiO_2, carbonate filaments, magnetite, and iron sulfides
	1D Determine the provenance of sampled material	**1D2** Characterize the chemistry of the near subsurface to determine endogenous vs exogenous origin of sample, and any surface processing of putative biosignatures observed.	Identify salts, radiation products (e.g. H_2O_2, CO_2, O_2, SO_2, S_n), silicates (anhydrous and hydrous), metals, metal hydroxides.

GREEN RAMAN CO-DEVELOPMENT EFFORTS
MARS MICROBEAM RAMAN SPECTROMETER

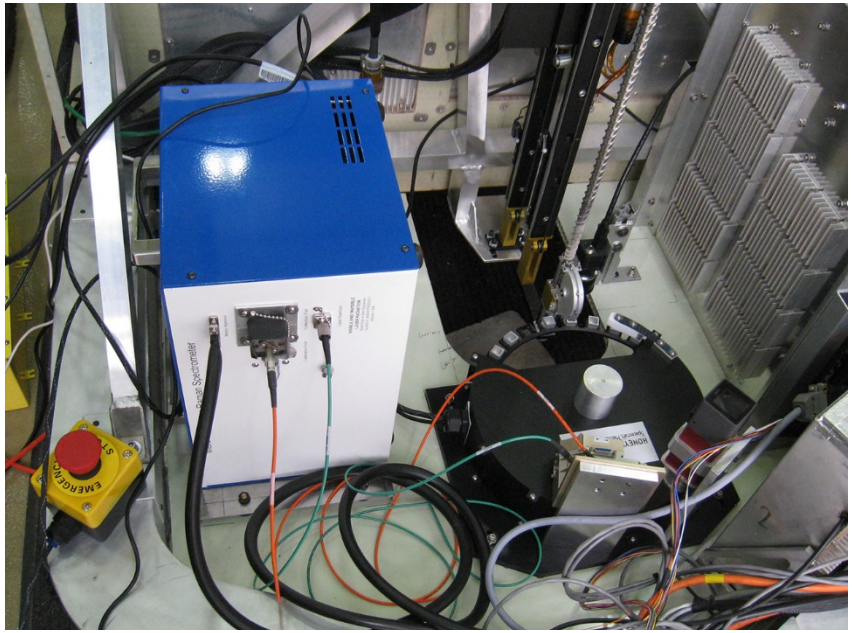

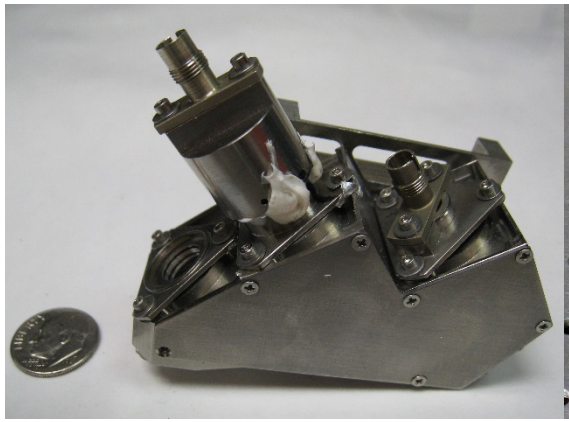

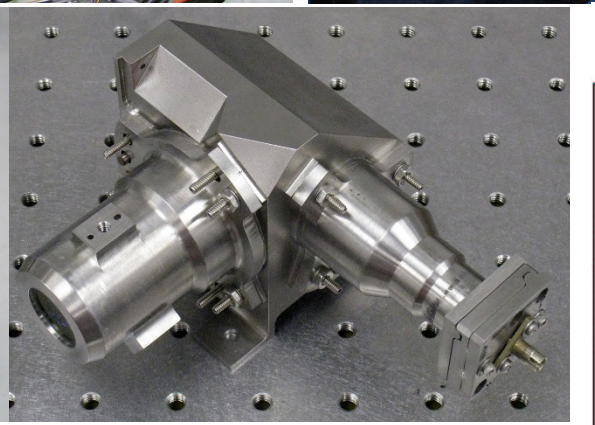

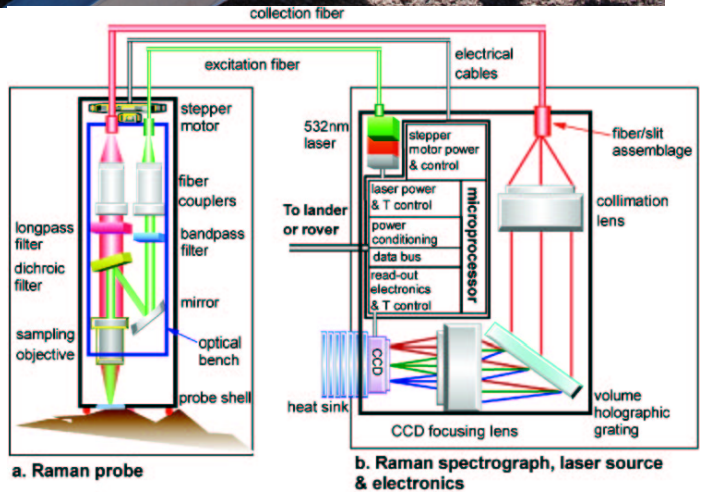

COMPACT INTEGRATED RAMAN SPECTROMETER

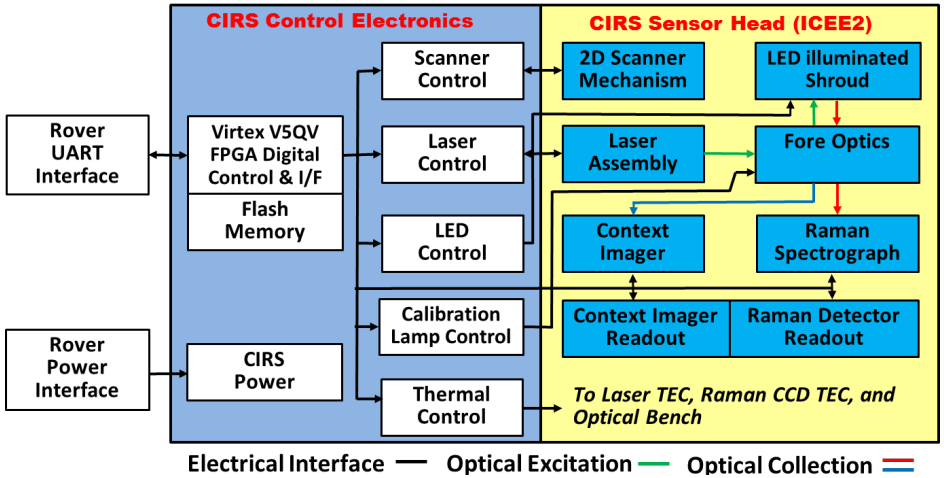

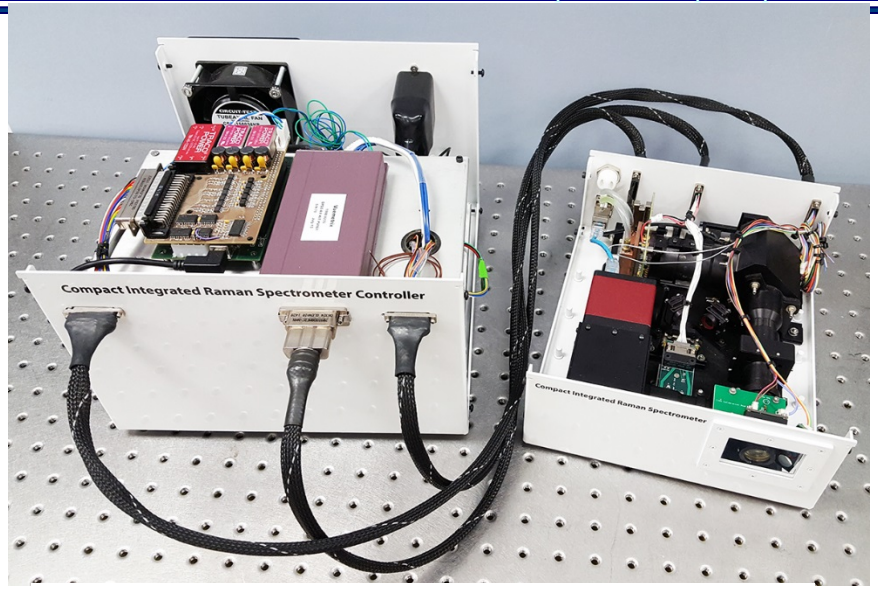

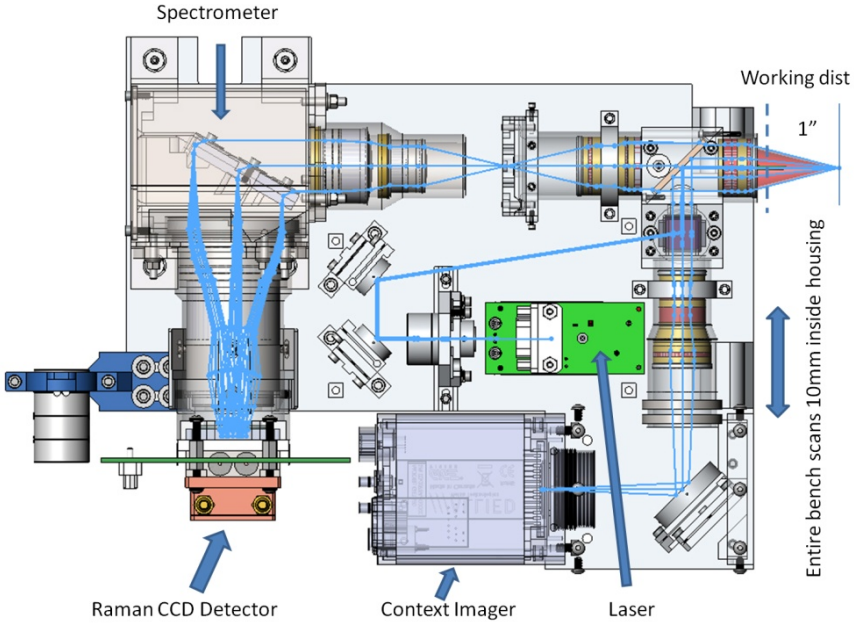

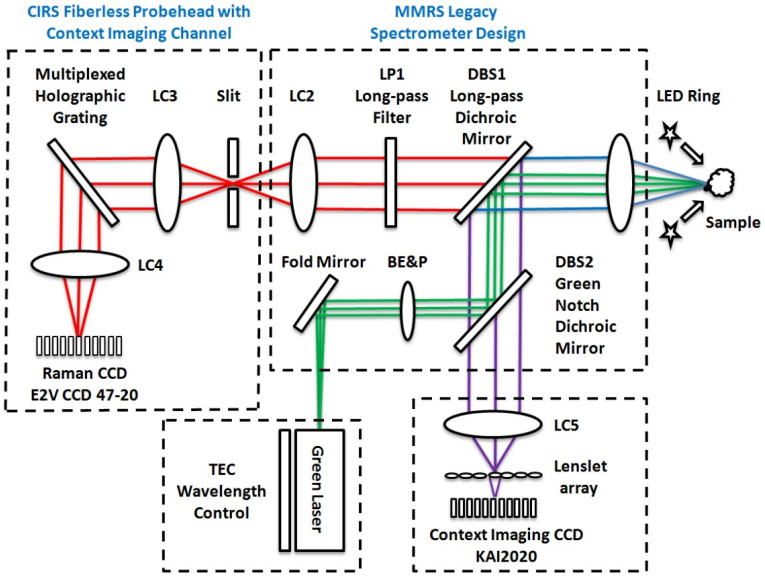

Pre-Decisional Information – For Planning and Discussion Purposes Only

CIRS CURRENT SPECIFICATIONS

Parameter	Value
Laser Excitation Wavelength	532nm
Spectral performance	Single frequency
Spatial mode quality (M^2)	<1.2
Focal spot diameter	~20μm
Optical Output Power	3-50mW
f-number (excitation)	15
f-number collection	2
Working Distance	25mm
Spectral Coverage	150-4000 cm^{-1}
Spectral Resolution	~6cm^{-1}
SNR (dark pyroxene, 1cm from best focus)	≥5
Spatial Coverage	1cm
Context Imager Pixel Resolution	1504x2000 (7μm pixels)

LIGHTFIELD IMAGING

Normal Camera

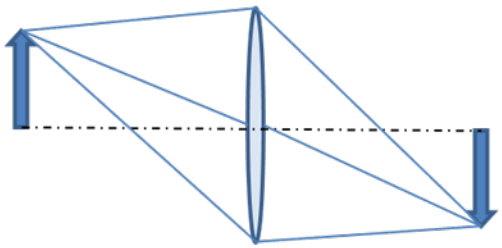

Light field 2.0 Camera

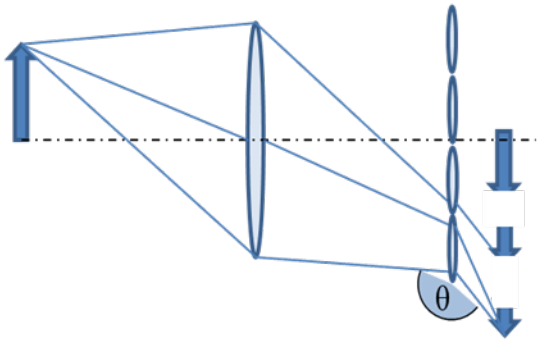

The microlens breaks up the normal image and adds (radiance) angular information

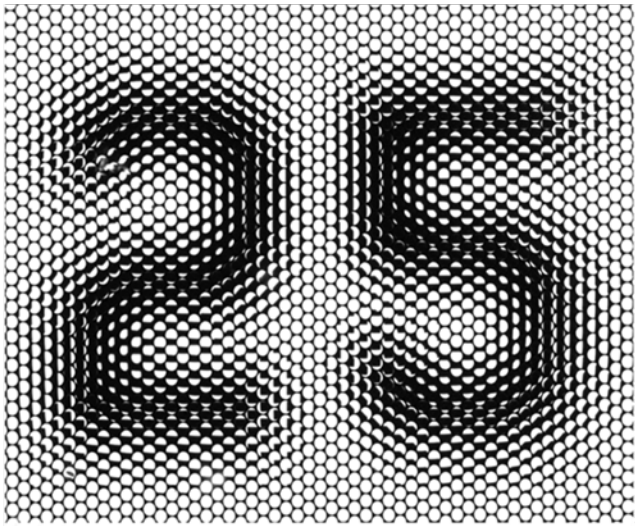

Input: -0.20" Raw Out of Focus Image

Output: Synthetically Refocused Image

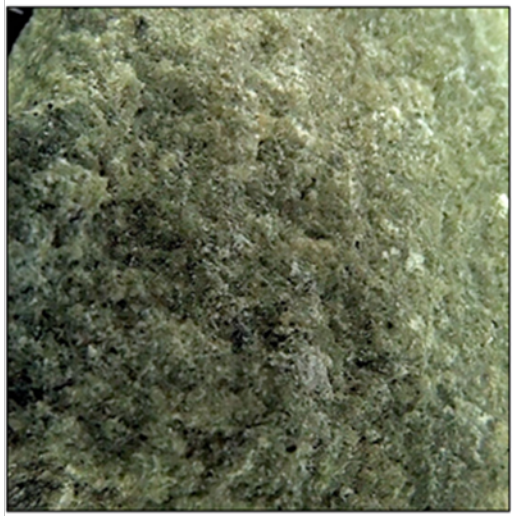

MITIGATING FLUORESCENCE USING SERIALLY SHIFTED EXCIATION

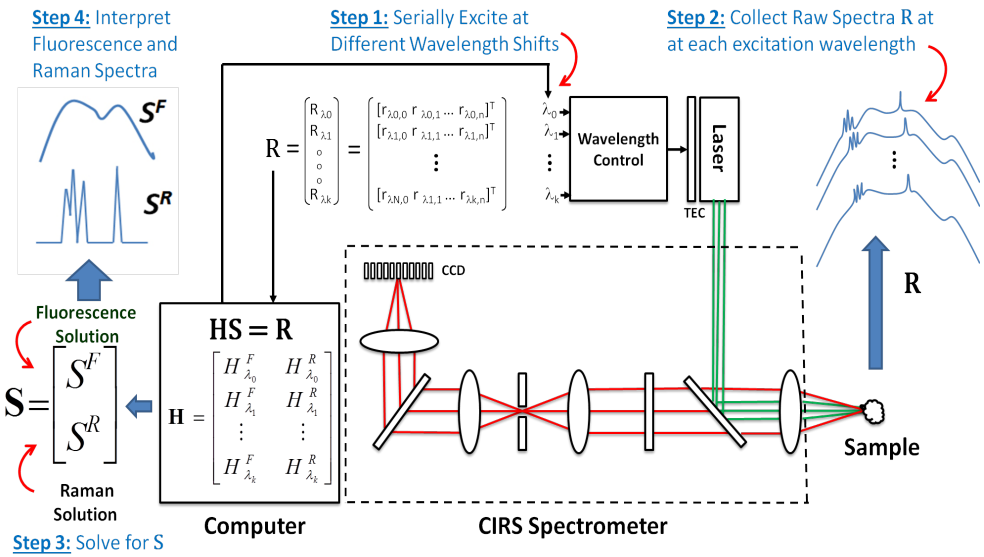

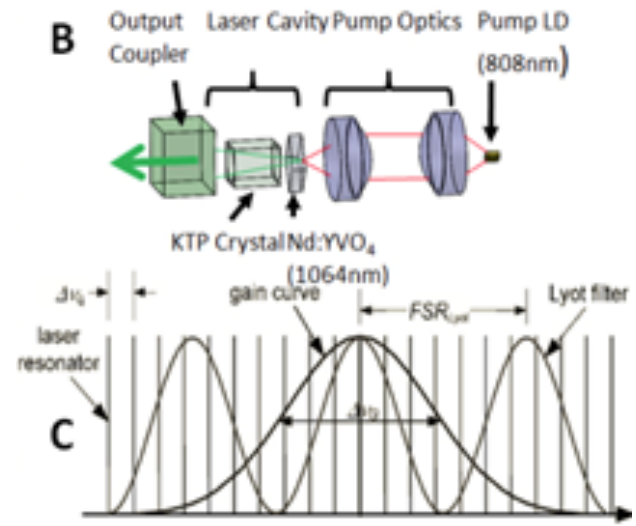

Enstatite SSE Processed Spectra

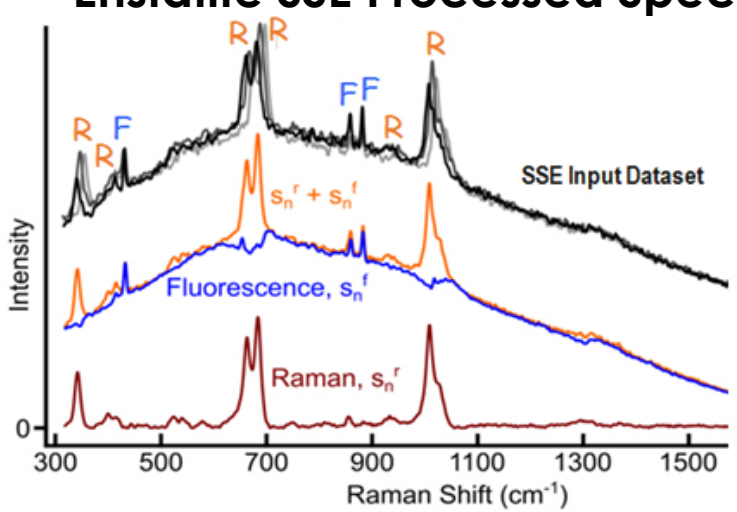

Deinococcus radiodurans SSE Processed Spectra

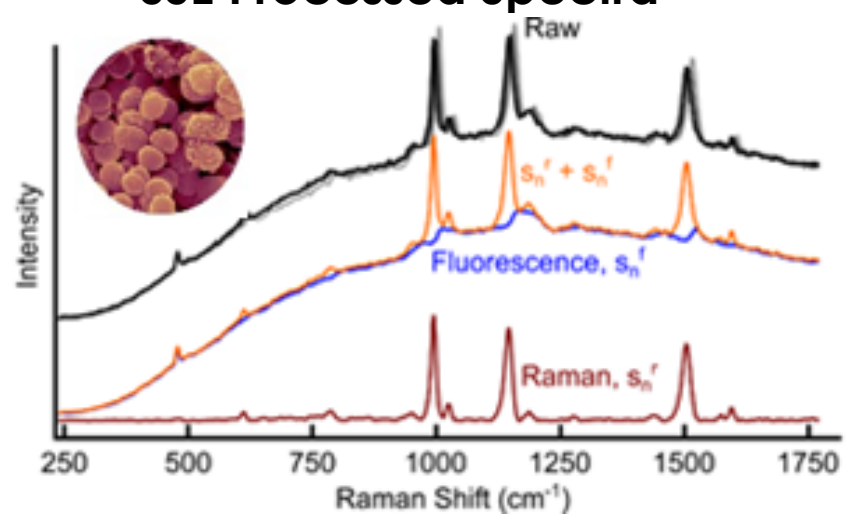

CIRS ICEE-2 RAMAN SPECTROMETER

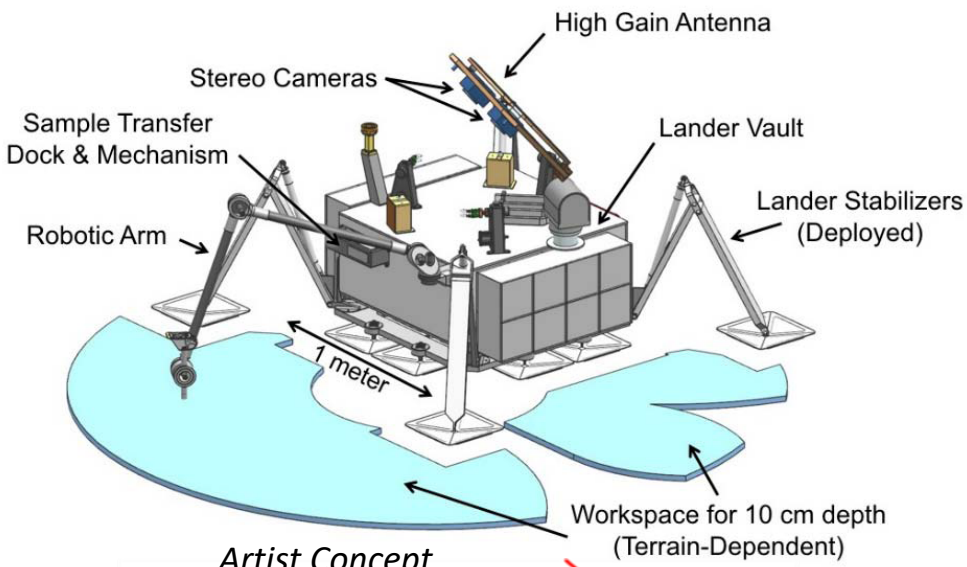

Artist Concept

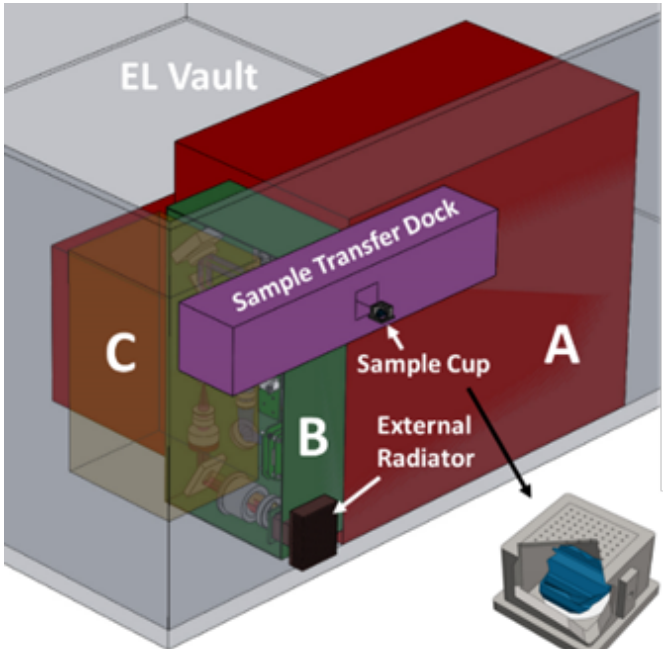

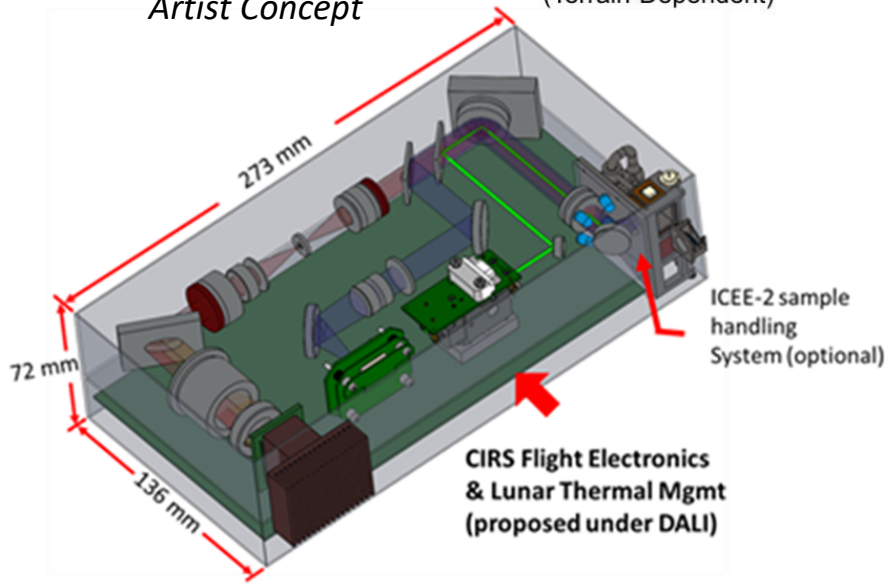

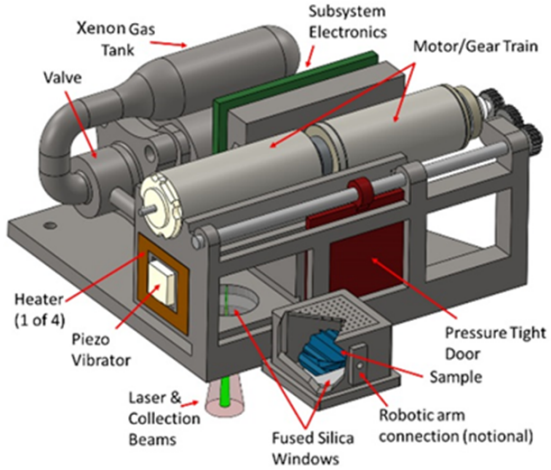

ANALYIS OF ICY SAMPLES IN 3 STATES

Solid Phase

- Potentially allows analysis of phase of ice
- Allows direct analysis of inclusions
- Small particles often concentrated in ice veins

Liquid Phase

- Chemometric Analysis of soluble constituents

Desiccated State

- Higher SNR – solids hopefully collect at bottom surface that is position CIRS best focus.
- Potential for use of Surface Enhanced Raman (SERS)

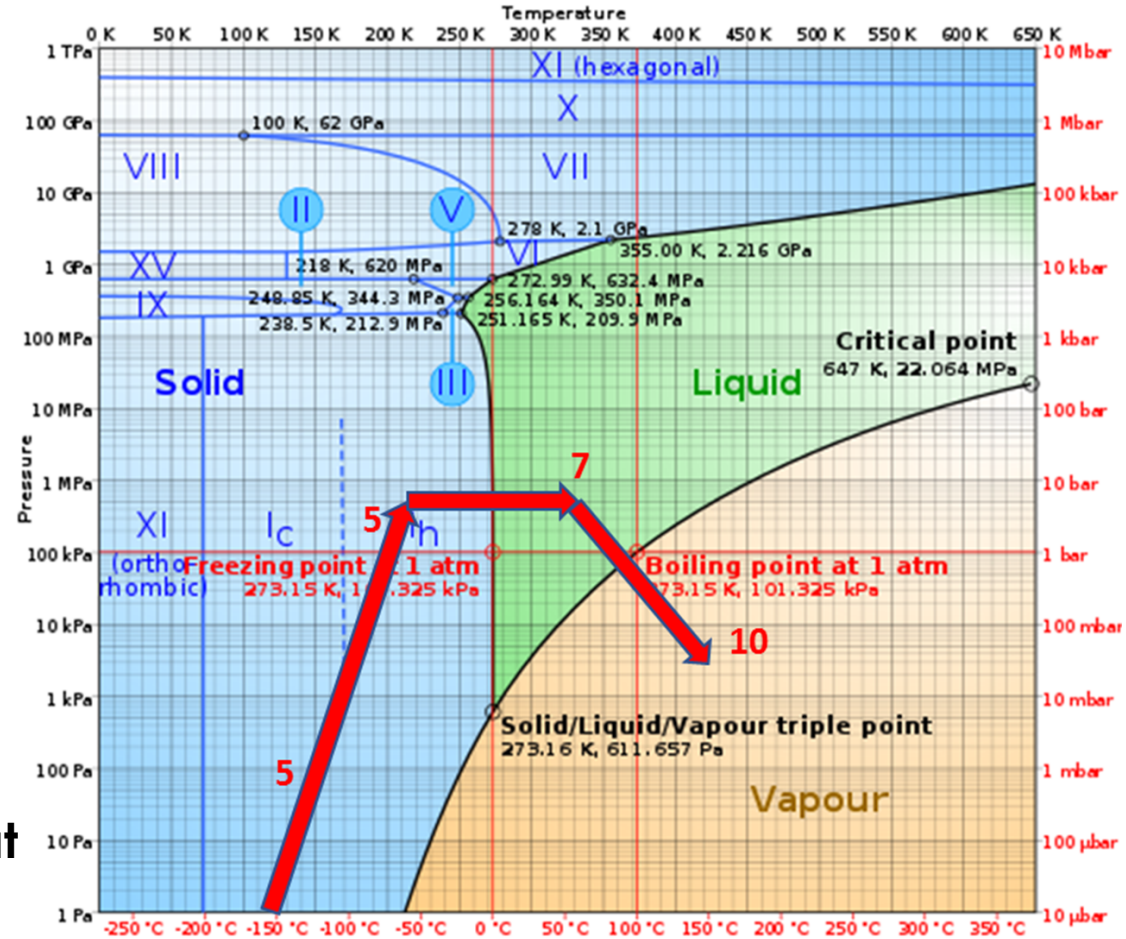

Mitigating Radiation Effects on Europa

		Mitigation
Raman FPA (CCD47-20)	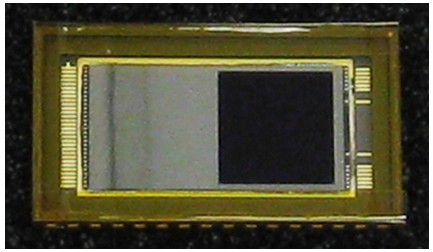	**MegaRad Hard CCD (CCD347-20)**
Context Imager (KAI2020)	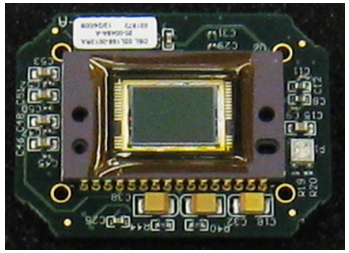	**MegaRad Hardened CMOS (CIS115)**
Transmissive Optics	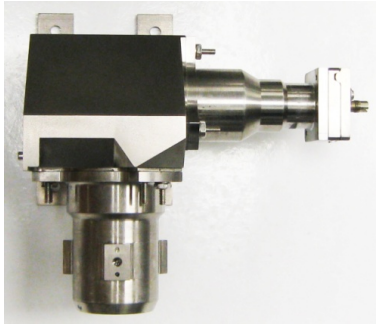	**Cerium Doped & Radiation Resistant Glasses & Shielding**
Laser	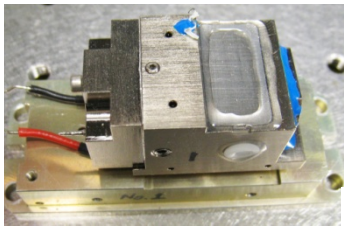	**Laser Alternatives: Frequency Doubled VECSEL Direct Diode**

Summary

- Leverages on >25 years of development by WUSTL and JPL
- Design will allow autonomous operation without Earth in the Loop
- Will be capable of analyzing samples in frozen, melted, and desiccated states
- Uses Lightfield Imaging and Microbeam Laser to avoid the need for mechanical autofocus
- Incorporates a 2D scan capability with blue and UV LED excitation
- Uses Serially-Shifted Excitation (SSE) to separate fluorescence and Raman components
- Can induce resonant Raman in large conjugated or aromatic molecules (carotenoids, etc)
- Uses a highly radiation resistant components: laser, optics, detectors, and electronics

Acknowledgement: This work is being carried out at the Jet Propulsion Laboratory, California Institute of Technology under a contract with the National Aeronautics and Space Administration.