ICEE-2 Overview

Joel Krajewski, Payload Manager, Europa Lander PreProject

26 June 2019

Jet Propulsion Laboratory
California Institute of Technology

Pre-Decisional Information – For Planning and Discussion Purposes Only

ICEE-2 Program

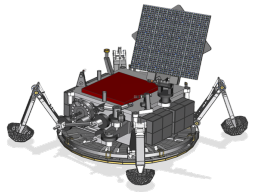

- Award Date: 8 Feb 2019 to 14 awardees
- Planned execution duration: 2 years
- Deliverables
  - Biannual: Briefings via telecon with NASA program managers
  - End of Year 1: Report on detailed spacecraft accommodation
  - End of ICEE-2 Task: Final Report (< 10 pages); Final Briefing at NASA HQ

ICEE-2 Goals from ROSES Call

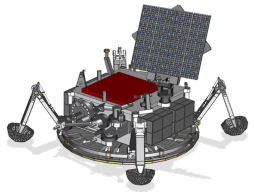

- "The goal of the program is to advance both the technical readiness and spacecraft accommodation of instruments and the sampling system for a potential future Europa lander mission … to TRL 6 in the 2021/2022 timeframe."
- Expected Instrument Technology Advancement Activities:
  - "Evolve this path [to TRL6] into a detailed technology development plan and begin executing it."
  - "Developing requirements and flowing them down to the subsystem level and across to the spacecraft"
  - "Developing the instrument architecture; conducting acquisition planning"
  - "Completing heritage assessment; conducting performance, cost, and risk trades"
  - "Identifying and mitigating development and programmatic risks"
  - "Initiating engineering development activities; creating preliminary system-level designs"
  - "Developing time-phased cost and schedule estimates"
- Expected Spacecraft Accommodation Activities:
  - "close interaction (including face to face) between the NASA-JPL pre-project lander study team and ICEE 2 selectees. "
  - "collaborative discussions of issues and solutions regarding instruments, the sample acquisition and delivery system, and the landed element"

Pre-Project Gains from ICEE-2

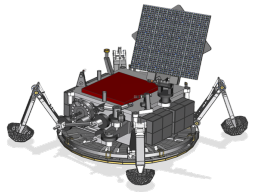

ICEE-2 Task Area Priority order	Pre-Project interest
Sample Analysis Instrument Accommodation	1) Refine driving requirements on delivered sample, e.g., minimum volume, thermal constraints, etc. 2) Develop viable sample transfer concepts and address associated Lander accommodation (e.g., thermal) 3) Assess range of desired sample processing and associated TRL level; Identify possible commonality across instrument types; Reassess plan for implementation responsibility
Autonomy	Develop instrument capabilities driven buy short mission duration, especially autonomous sampling instrument checkouts/calibrations
Geophone Accommodation	Develop requirements for minimization of both Europan seismic signal attenuation and self-generated Lander noise
Camera Accommodation	Evaluate pros/cons of current baseline, which levies engineering requirements/constraints on Science cameras (i.e., cameras mounted to HGA, imaging of sampling hardware, etc)
Planning	Refine assumptions regarding development schedule

ICEE-2 Awardees

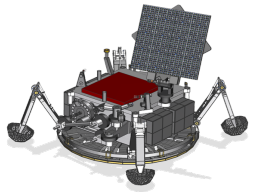

Principal Investigator, *Institution*	**Instrument**
Byrne, Shane, *Univ. Of Arizona*	**C-LIFE**: Cold-Lightweight Imagers for Europa
Murchie, Scott L, *JHU/APL*	**ELSSIE**: Europa Lander Stereo Spectral Imaging Experiment
Arevalo, Ricardo D, *U. Maryland, College Park*	**CORALS**: Characterization of Ocean Residues and Life Signatures
Glein, Christopher R, *Southwest Research Institute*	**MASPEX-ORCA**: MAss Spectrometer for Planetary EXploration-ORganic Composition Analyzer for Europa Lander
Mathies, Richard A, *UC Berkeley*	**MOAB**: Microfluidic Organic Analyzer for Biosignatures
Brinckerhoff, W. B., *Goddard Space Flight Center*	**EMILI**: Europan Molecular Indicators of Life Investigation
Lambert, James L., *Jet Propulsion Laboratory*	**CIRS**: Compact Integrated Raman Spectrometer
Quinn, Richard, *Ames Research Center*	**ELM**: Europa Luminescence Microscope
Bailey, Samuel Hop, *University Of Arizona*	**SIIOS**: Seismometer to Investigate Ice and Ocean Structure
Panning, Mark P, *Jet Propulsion Laboratory*	**ESP**: Europa Seismic Package
Ricco, Antonio J, *Ames Research Center*	**MICA**: Microfluidic Icy-World Chemistry Analyzer
Moldwin, Mark B, *U. Michigan, Ann Arbor*	**MAGNET:** Radiation Tolerant Magnetometer for Europa Lander
Grimm, Robert E., *Southwest Research Institute*	**EMS**: Europa Magnetotelluric Sounder
Malespin, Charles A, *Goddard Space Flight Center*	**CADMES**: Collaborative Acceptance and Distribution for Measuring Europan Samples System

ICEE-2 – PreProject Rules of Engagement

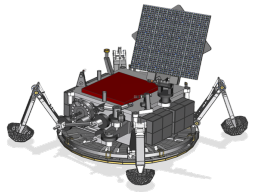

- HQ encourages open exchange with the PreProject, and the process will be a mix of
  - Awardee-wide discussions
  - Periodic Telecons between Individual Awardees and Pre-Project
  - Site-visits at Individual Awardees if specifically useful
  - Internal Pre-Project Analyses
  - Fully public workshops
- NASA HQ Rep (Schulte, Salute) is CC'd on email exchanges and invited to telecons
- JPL PreProject establishes Non-Disclosure Agreements with all PI's who desire one
- JPL ICEE-2 teams are treated with the same constraints as non-JPL ICEE-2 teams
- Any additional Pre-Project technical material will be posted to a PreProject public website
  - Motivation: maintain level playing field for possible future AO

Payload Accommodation Resources
No changes to relative to the Draft PIP

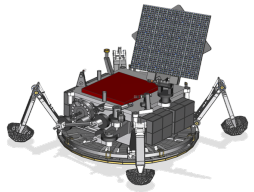

Table 3-5. Sampling System Requirements and Sample Characteristics

Requirement on Delivered Sample	Baseline	Change since draft PIP
Number of sampling locations within the workspace (i.e., number of trenches)	1	None
Number of samples delivered to each instrument	3	None
Minimum volume of each sample for each instrument	Proposers should specify requirement. Baseline assumption from SDT Report Model Payload is: 1. 1 cc for the Organic Compositional Analyzer 2. 1 cc for the Vibrational Spectrometer 3. 5 cc for the Microscope	None
Minimum target depth for delivered sample	>/= 10 cm (below horizontal surface)	None
Minimum fraction of delivered sample from target depth	80% (by volume)	None
Maximum fraction of sample-to-sample cross-contamination	No requirement but will characterize and minimize by design and operations	None
Maximum temperature of sample prior to presentation or delivery to science instrument	150 K (or $T_{surface}$ + 10 K, whichever is greater)	None
Maximum Particle Diameter	3 mm	None

Expect ICEE-2 results may suggest refinements

Table 3-2. The entire proposed integrated payload should not exceed these resource envelopes.

Resource	Payload Not-to-Exceed Value	
Mass (see Table 3-1)	32.7 Kg at selection (CBE+Uncertainty) (1)	None
Volume (See Figure 3-1)	34.5 L (internal and external to the vault)	None – see later chart
Energy	1600 W-Hr total for all payloads; See Table 5-2	None – see later chart
Science Data	600 Mbits total; See Table 5-2	None
Note (1): The Project holds payload mass reserves for use post-selection to solve accommodation and other issues in order to achieve a not-to-exceed total payload mass of 42.5kg at hardware delivery		

Instrument Technical Resource allocations and Interfaces

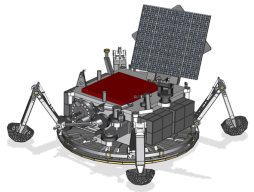

- Draft PIP posted with ICEE-2 call remains the project's baseline
- Default policy is to retain the original allocations and interfaces described in draft PIP.
  - i.e., Treat any deviation needed by a given ICEE-2 team's as an instrument-unique accommodation "cost"
- Specific draft PIP clarifications / refinements include:
  - Augmentation to Power interface requirements
  - Maximum Instrument length in Vault
  - Camera Heads on HGA:
    - Max length and stowed orientation
    - radiation-shielding from HGA
    - flexibility in camera head housing
  - Assessment of 2-meter external cable length assumption
  - Vault Temperature during Cruise and Surface Phases

Power Interface Requirements – Augmentation in *BLUE ITALICS*

- Information regarding Power Interface (Draft PIP Section 3.8.1):
  - 28V bus with a nominal range of 24-36V (operational range) *at the connector interface*
  - All instruments need to tolerate any voltage 0-40V (survival range)
  - Lander provides 2A channels and a limited number of 5A channels
    - ***Instrument can draw 100% of channel rated current during nominal operations (peak and average)***
    - ***Instrument can draw 200% of rated current for up to 80ms at turn on (INRUSH)***
    - *No spec available on ripple at this time*
  - *A 10A channel can be provided by ganging 2x 5A switches*
  - Single-point ground (SPG) system; primary power is kept isolated (typically > 1 MOhm, for both the active and return)
  - Instrument provides all its own secondary voltage conversion with the secondary returns tied to chassis

Payload Volume Allocation

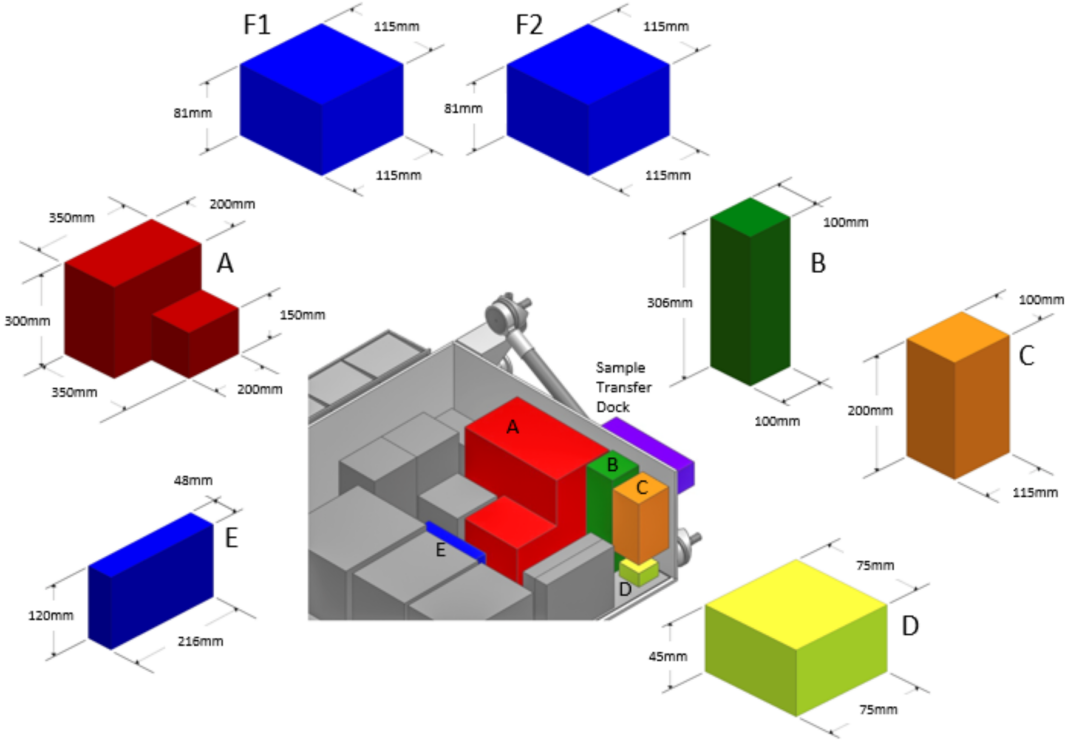

Overall volume allocation remains the same

<u>Suballocation per instrument is notional only</u>

<u>Shapes of notional suballocation are not strict</u>

ICEE-2 teams should propose volume shapes that are most natural to instrument design, improve ease of assembly/disassembly, etc.;

PreProject will identify if/when a proposed shape is inherently un-accommodatable

Maximum Instrument Length in Vault

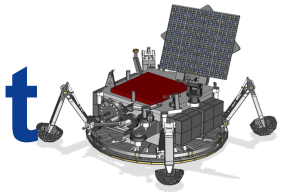

- As noted in ICEE-2 Kickoff, the individual instrument volumes shown in draft PIP Figure 3-1 are notional only - The overall collective instrument volume is a constraint
- Configuration of Flight System components and instruments within the Lander Vault can be rearranged to adapt to individual instrument form-factors
- The maximum length for a “long-skinny” instrument that can be accommodated in the Lander Vault without incurring Vault growth is 85 cm.
  - External Lander Vault dimension is 1 meter; 15cm allows for vault wall thickness, mounting brackets, cabling access, etc.

Camera Head on HGA: Max Length and stowed orientation

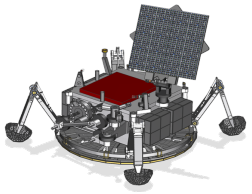

Baseline: Camera Head Face Up for Landing

Lens-mounted deployable covers advisable

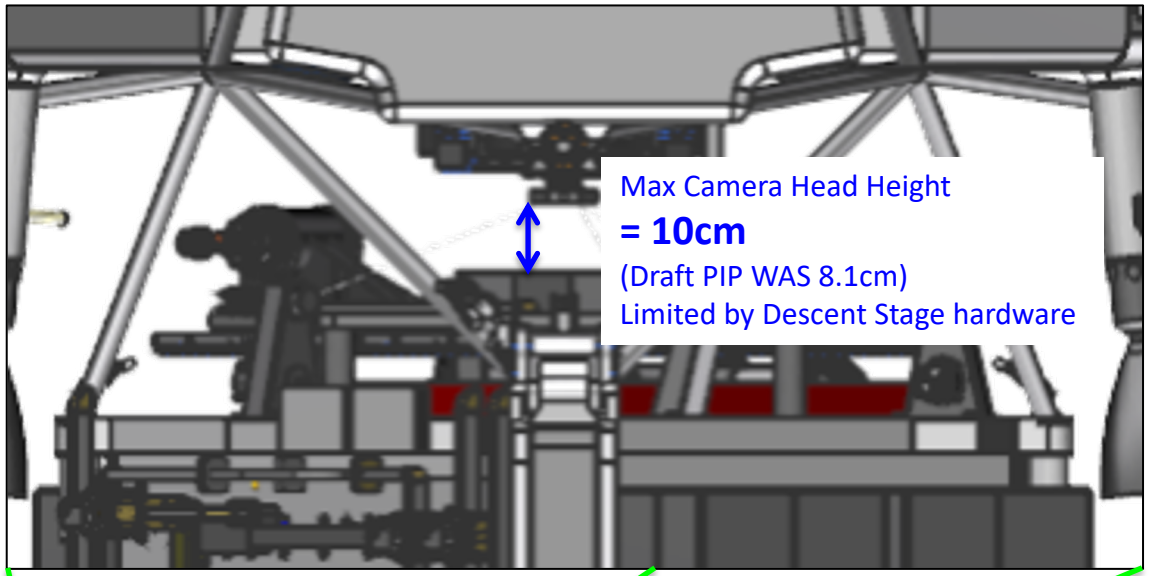

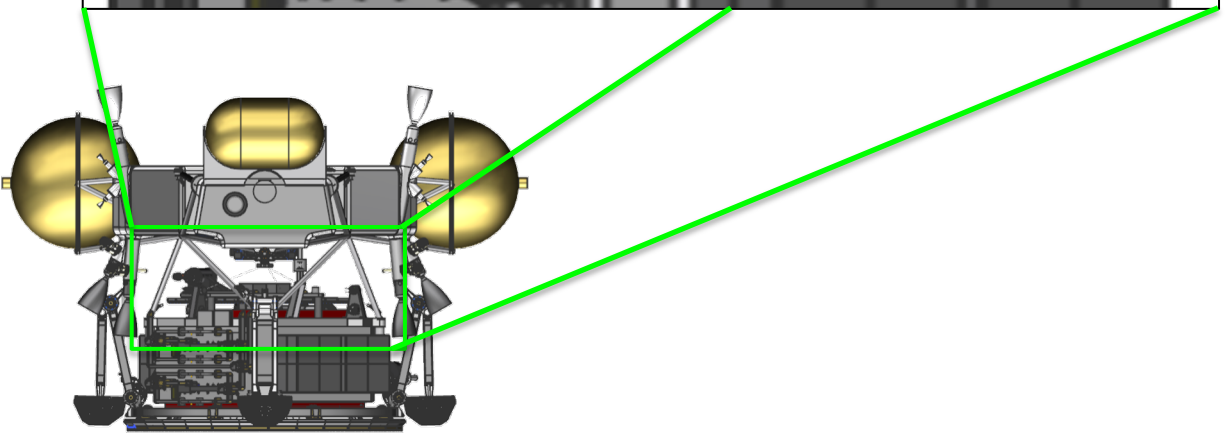

Alternative: Camera Head Faces Down for Landing

Enables deck-mounted lens covers that disengage with HGA elevation actuation

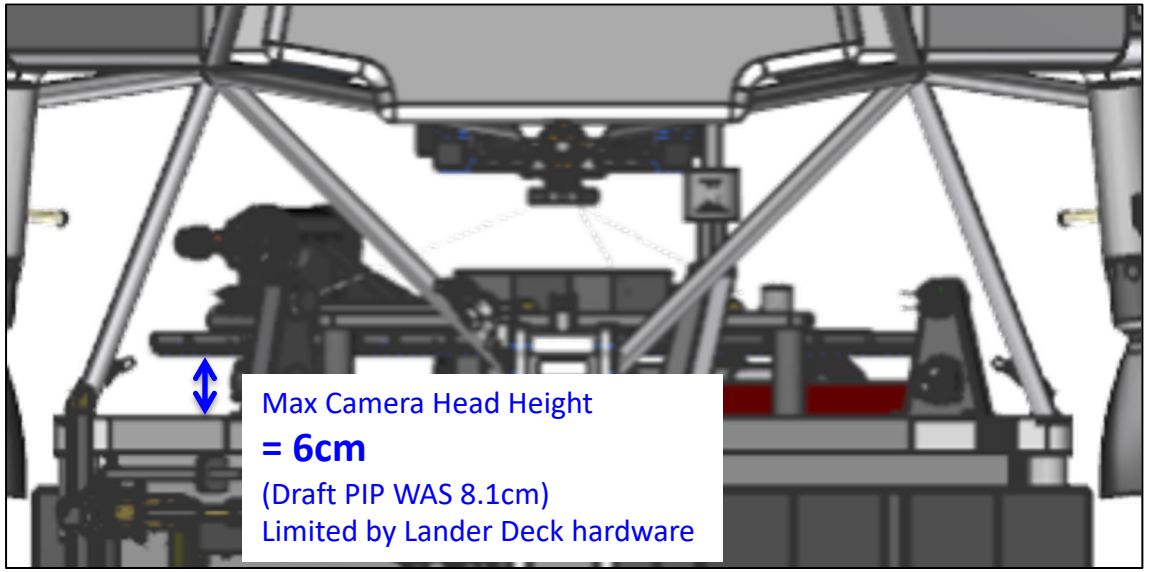

Rationale for Cable Length assumption for externally-mounted hardware

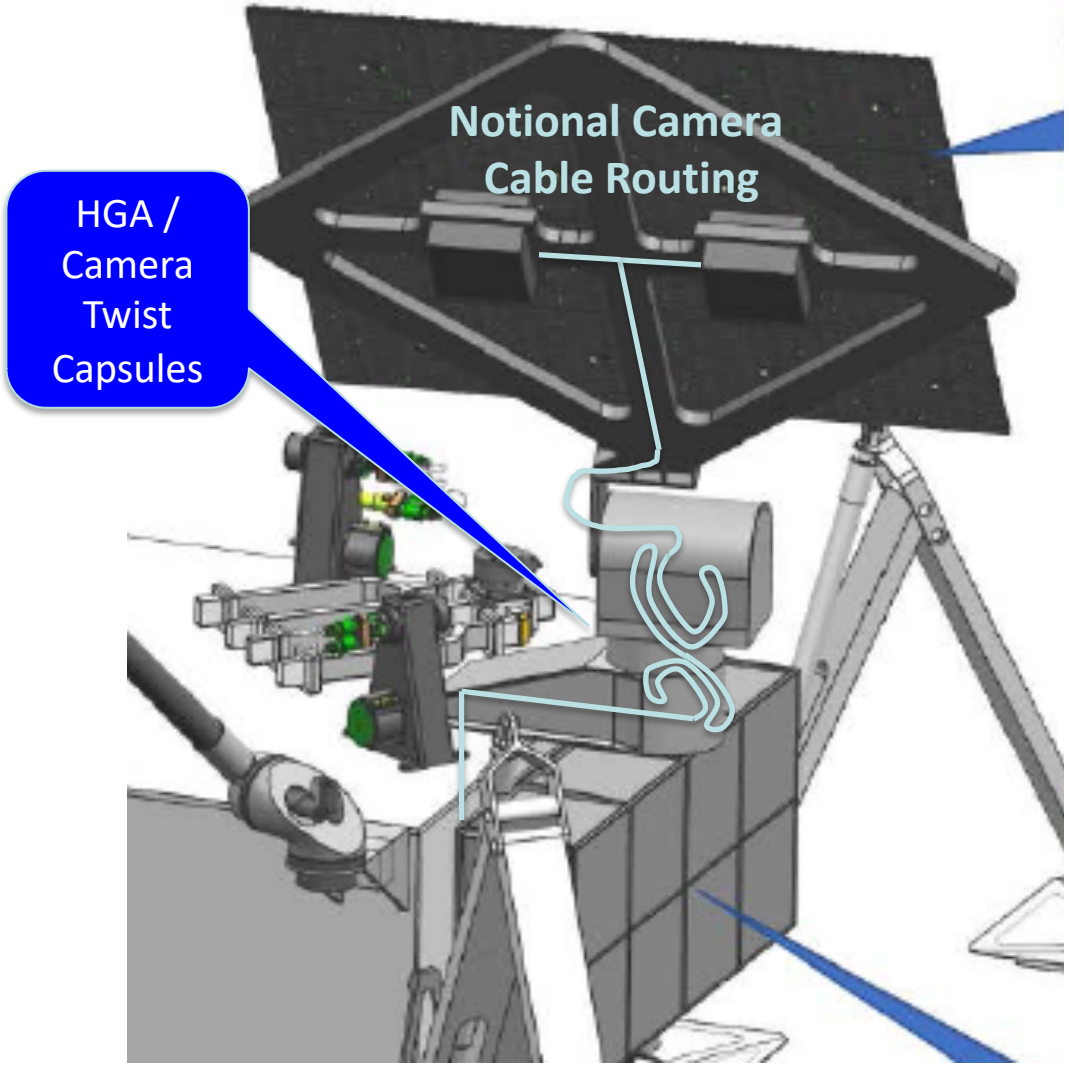

Camera Heads mounted ~ 0.7m above Lander deck
Require cables at least 1.5m length to reach vault interior Including service loops and Az and EL joint twist capsules.

Draft PIP paragraph 3.3.1 specified 2.0 meter length
To enable flexibility in Camera electronics Placement

By comparison MSL Cameras on mast ~ 1 meter above deck required 3.7m flex cable to reach Camera electronics

Additional Information on draft PIP Figure 2-10 relevant to Camera Heads

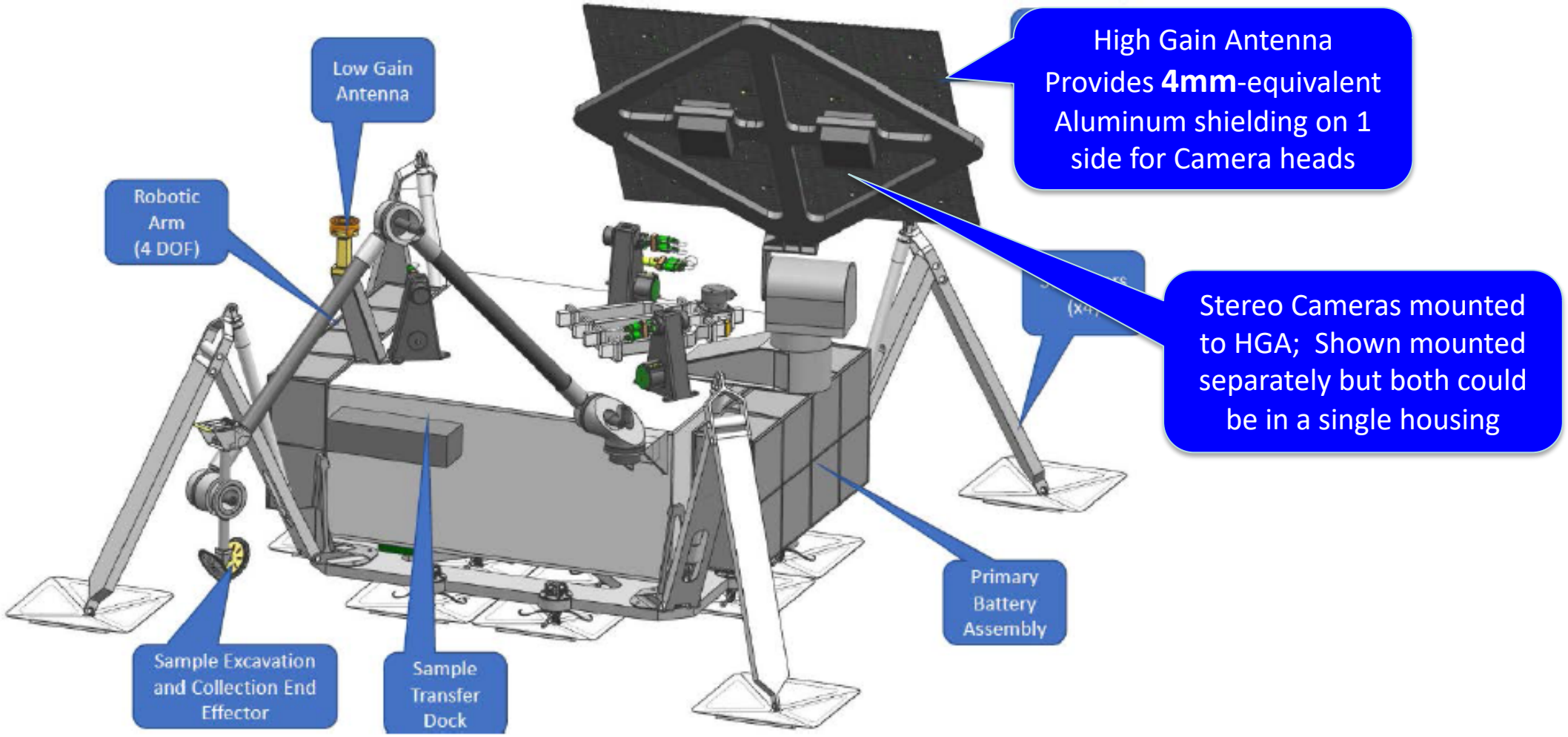

Figure 2-10. Lander Configuration

Vault Temperature During Cruise

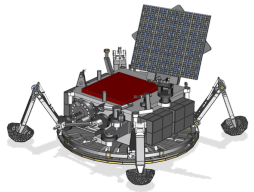

- Expect Vault to transition to steady state of ~ - 10 C within a couple days after launch
- ~ -10C vault temperature is expected to be maintained until < 1 day prior to Landing.
- Landing Day temperature transient up to max operating range of +50 C
  - Hardware required for DDL will be powered on and dumping heat into vault

Lander Thermal Balance

Need to account for Instrument heat loss to Environment

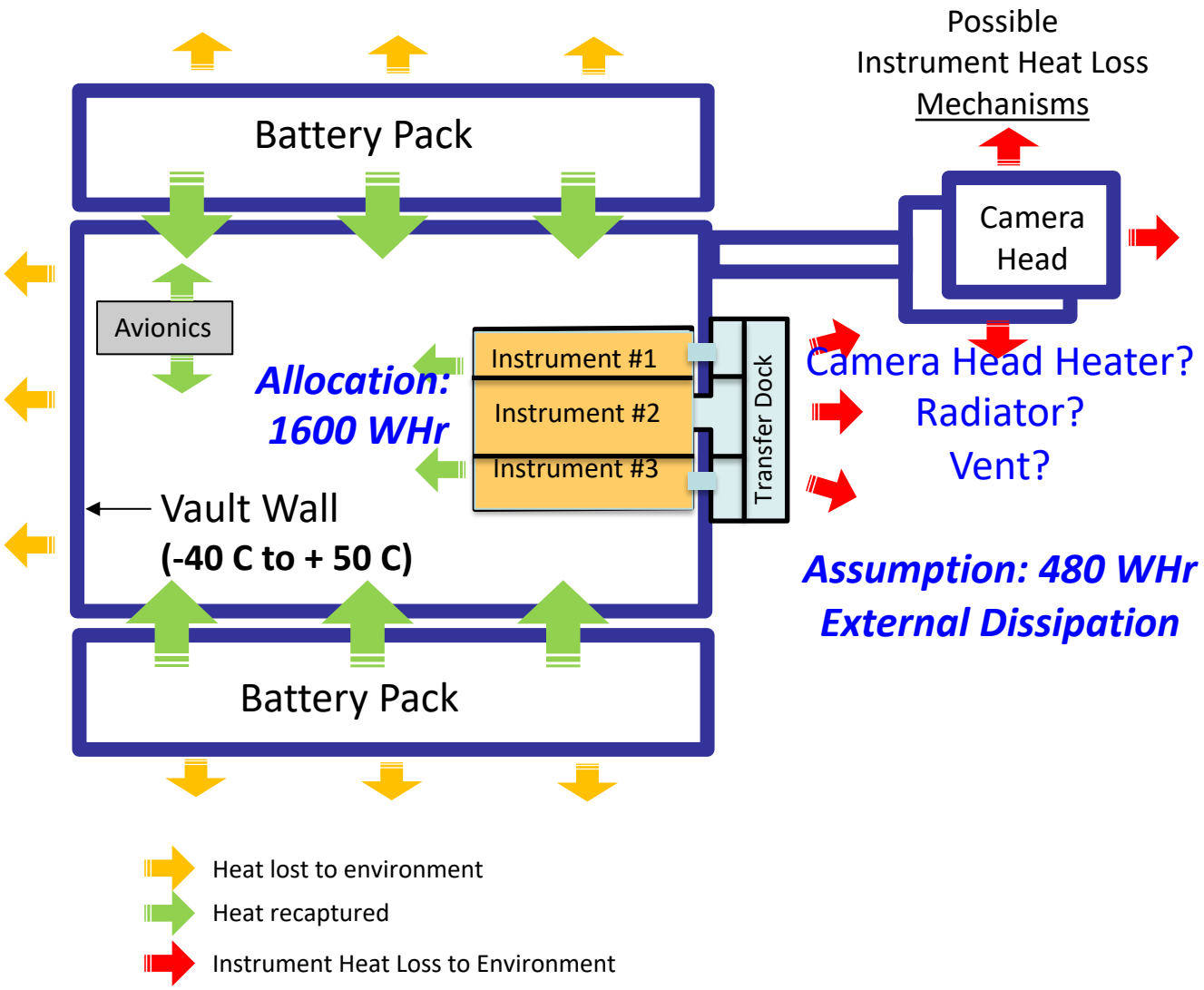

- Europa Lander makes use of battery, instrument, and avionics waste heat to maintain thermal balance
- To date, all instrument power allocations are assumed to be recaptured as waste heat into vault
- **For Instruments with external heat loss:**
  - **Needs to be accounted for within Instrument power/energy usage estimates**
  - **Applies both during operation and non-operating conditions**

Vault Temperature bounds during Surface Phase

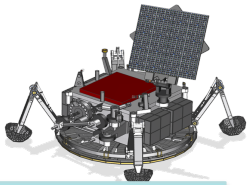

Warm/Cold bounds could expand as design evolves, e.g.,

1) If vault becomes thermally leakier than currently planned, cool-down could happen faster than "Cold Case"
2) If Ops scenario biases more Comm time early (e.g., expedite imaging return, improve anomaly response time) then cooldown would happen slower than "Warm Case"

Vault temperate at Landing could be as high as 25C

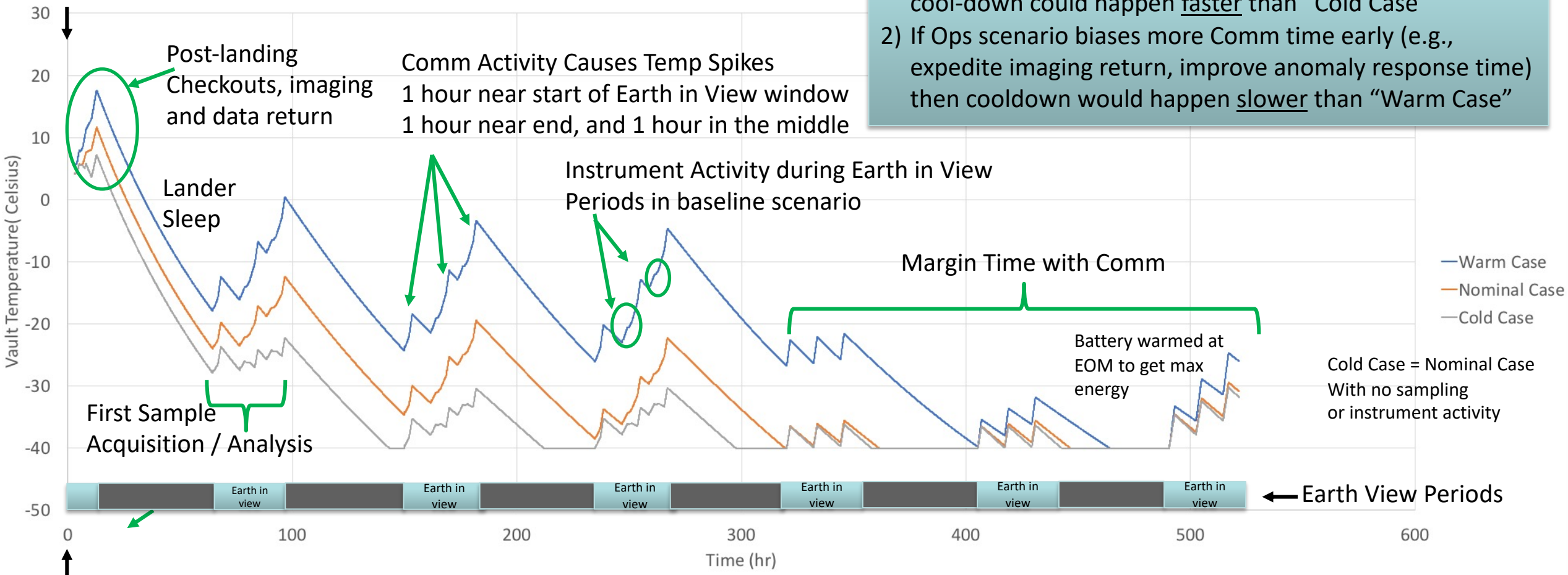

Landing

Wrap Up; PreProject Points of Contact

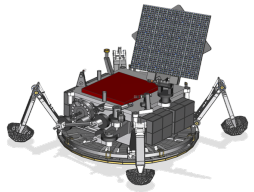

- JPL PreProject is excited to make progress on the unique challenges of instruments suitable for Europa Lander

- Joel Krajewski, Payload Manager ←primary point of contact
  - Joel.a.krajewski@jpl.nasa.gov
  - 818-354-5808 (office); 818-687-9829 (cell)

- Roger Gibbs, Project Manager
  - roger.g.gibbs@jpl.nasa.gov
  - 818-354-6826 (office)

- Kevin Hand, Project Scientist
  - Kevin.P.Hand@jpl.nasa.gov
  - 818-354-9547 (office)

- Steve Lee, Flight System Manager
  - steven.w.lee@jpl.nasa.gov
  - 818-393-6685 (office)