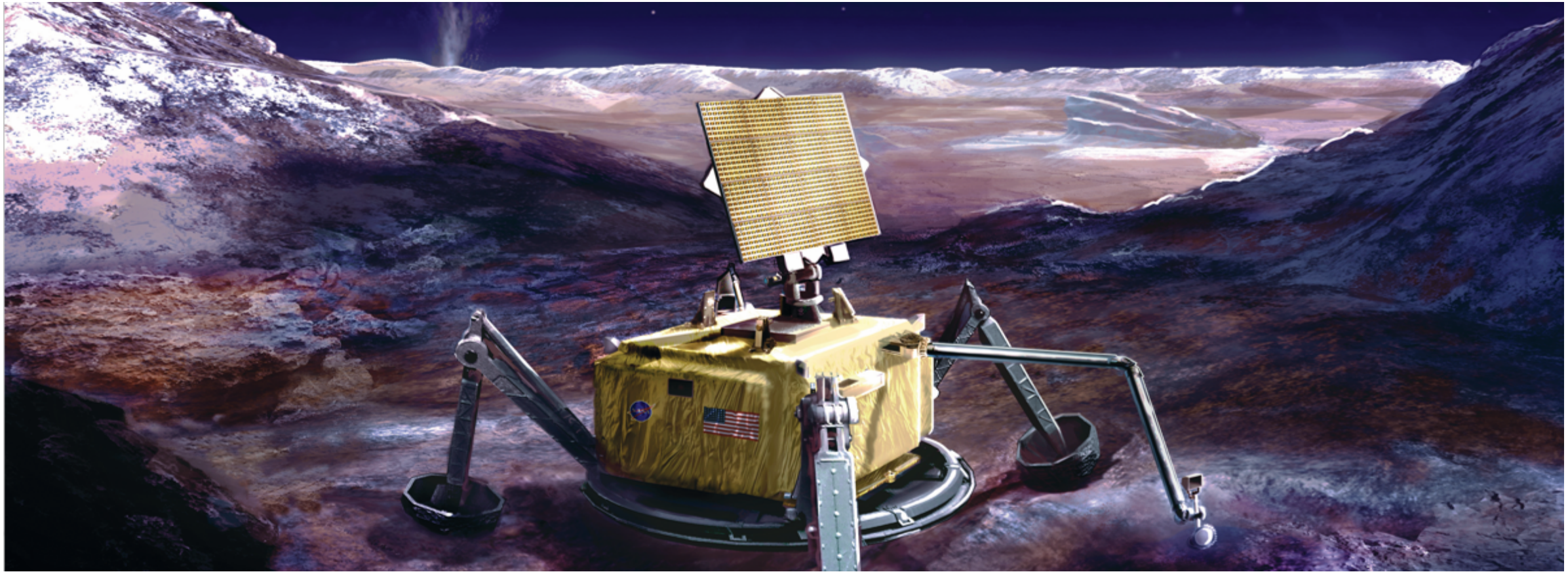

Europa Lander Mission Concept Overview

Grace Tan-Wang, Steve Sell

AbSciCon 2019, Bellevue, WA - June 26, 2019

Jet Propulsion Laboratory
California Institute of Technology

Europa Lander Mission Concept as of delta-MCR (Nov. 2018)

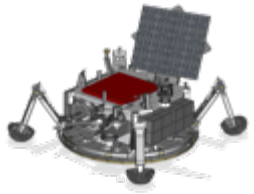

Launch
- SLS Block 1B

Cruise/Jovian Tour
- Jupiter Orbit Insertion: L+4.7 hrs
- Europa Landing: JOI+2 yrs

Carrier Stage
- 1.5 Mrad radiation exposure
- Elliptical disposal orbit

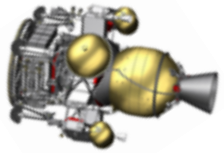

Deorbit, Descent, Landing
- Guided deorbit burn w/ Star-48-class solid rocket motor
- Sky Crane landing system
- 800N throttleable MR-104 engines
- 100-m accuracy
- 0.1 m/s velocity knowledge
- Terrain-conforming landing system

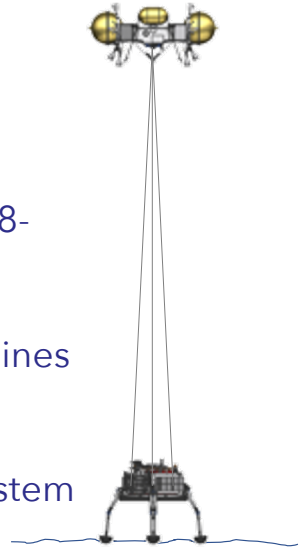

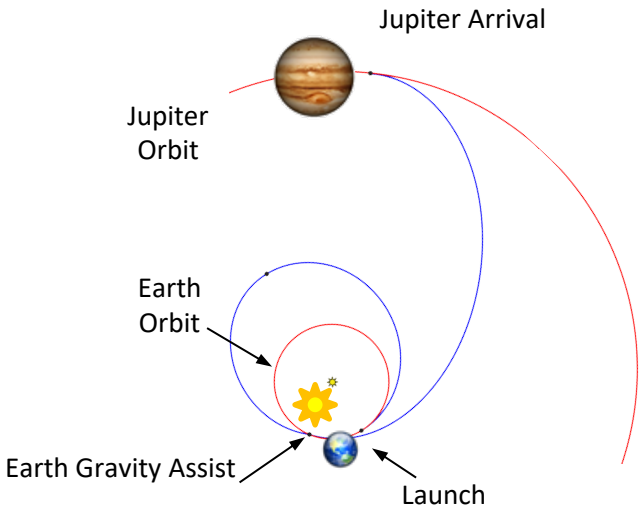

Surface Mission
- Biosignature Science
- Excavate to 10cm, sample, and analyze cryogenic ice
- 22 days surface mission duration
- High degree of Autonomy
- Direct to Earth Comm or Clipper (contingency)
- 1.5 Gbit data return
- 2.0 Mrad radiation exposure
- Terminal Sterilization for PP

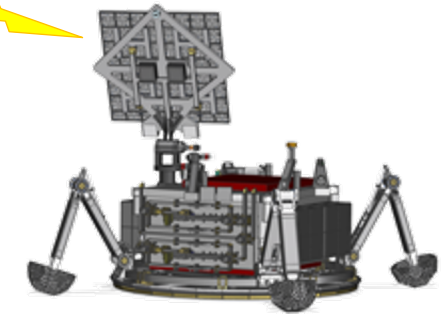

Baseline Flight System Vehicles

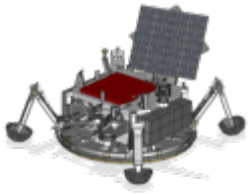

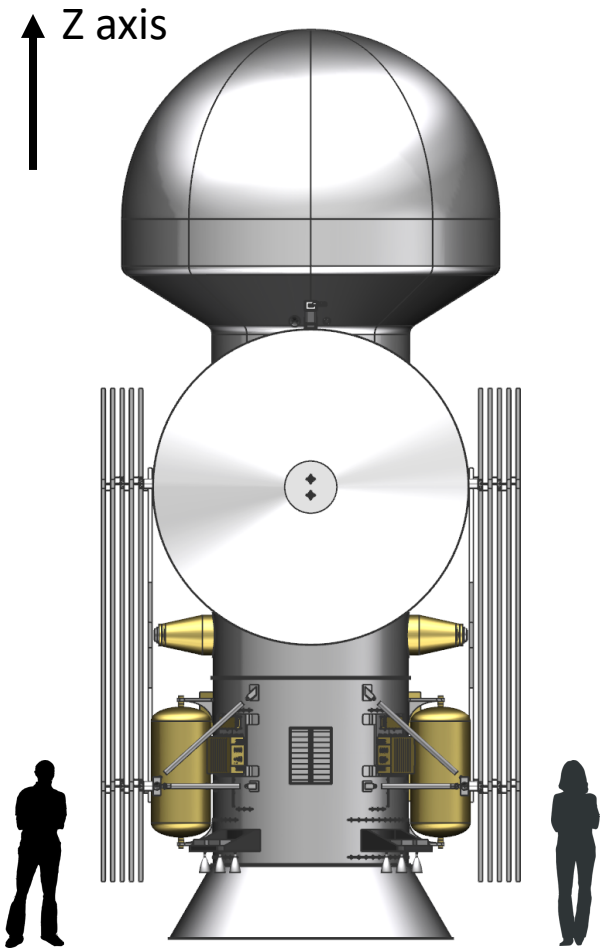

Launch Mass: ~15-16 mt

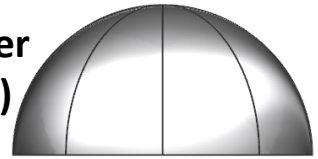

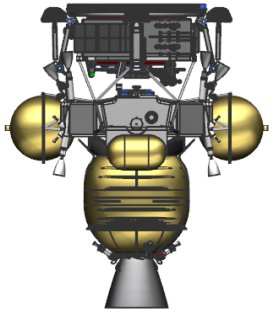

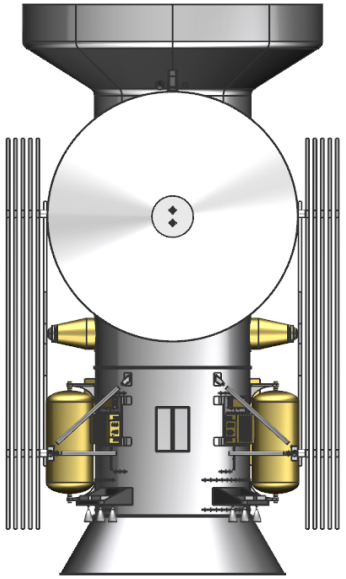

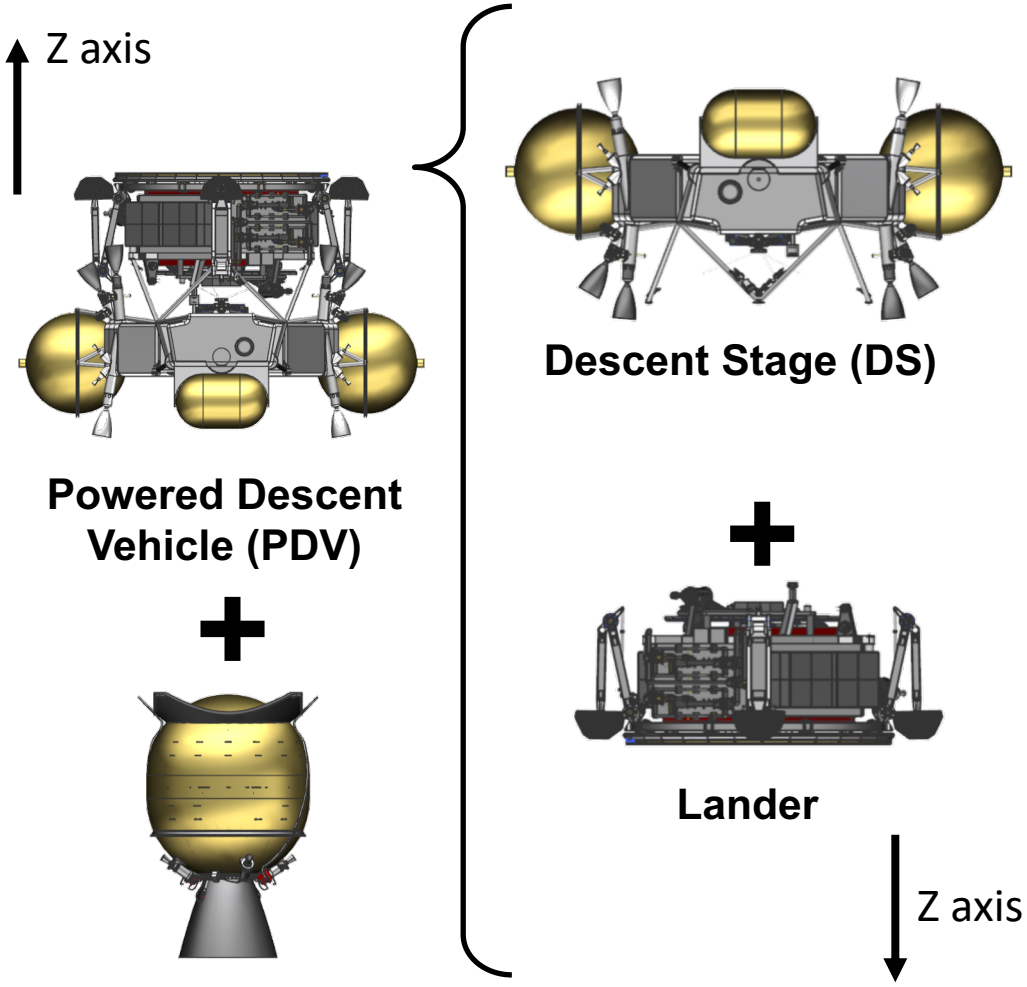

NOT TO SCALE

Baseline Deorbit Vehicle Configuration and Events

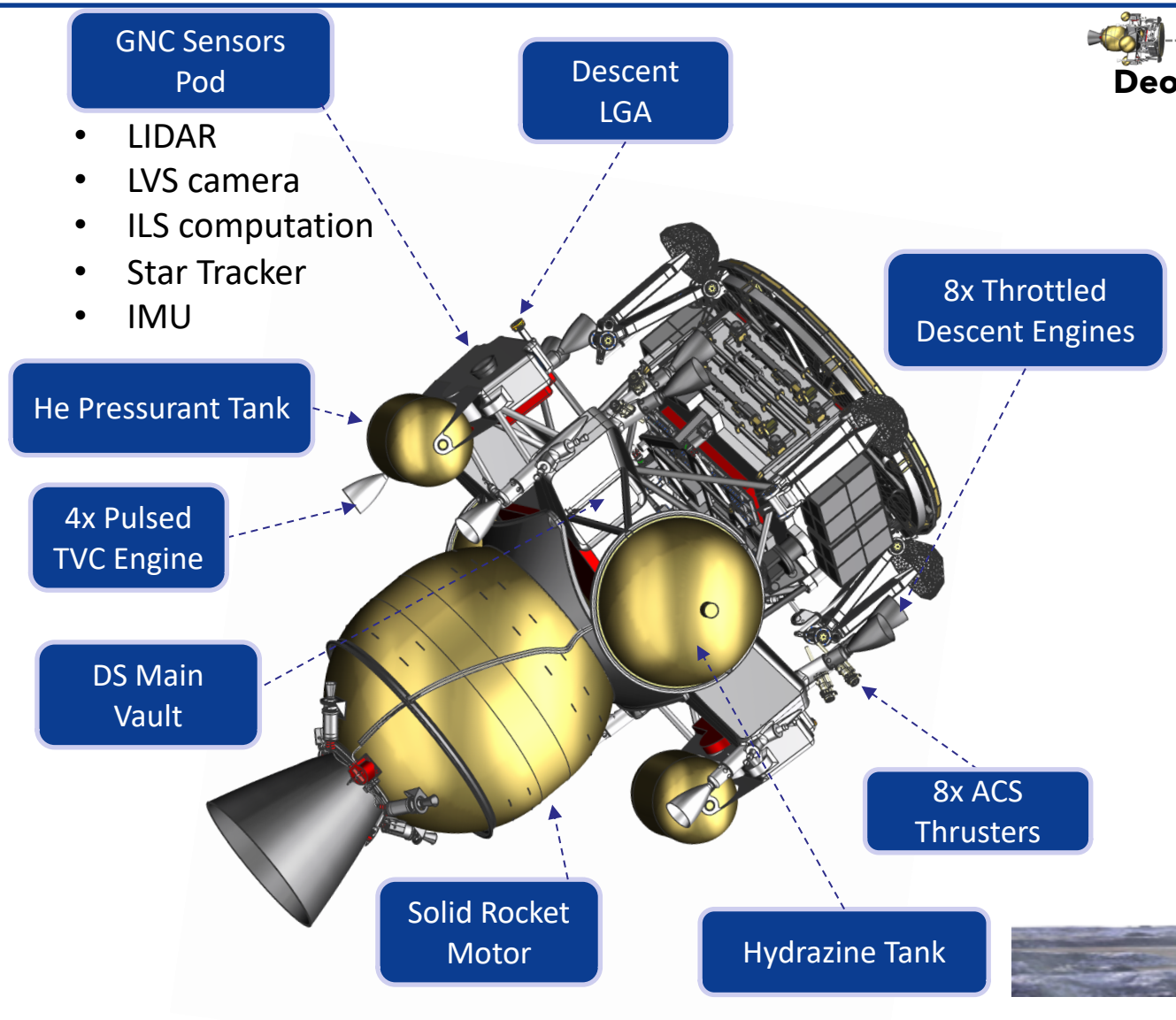

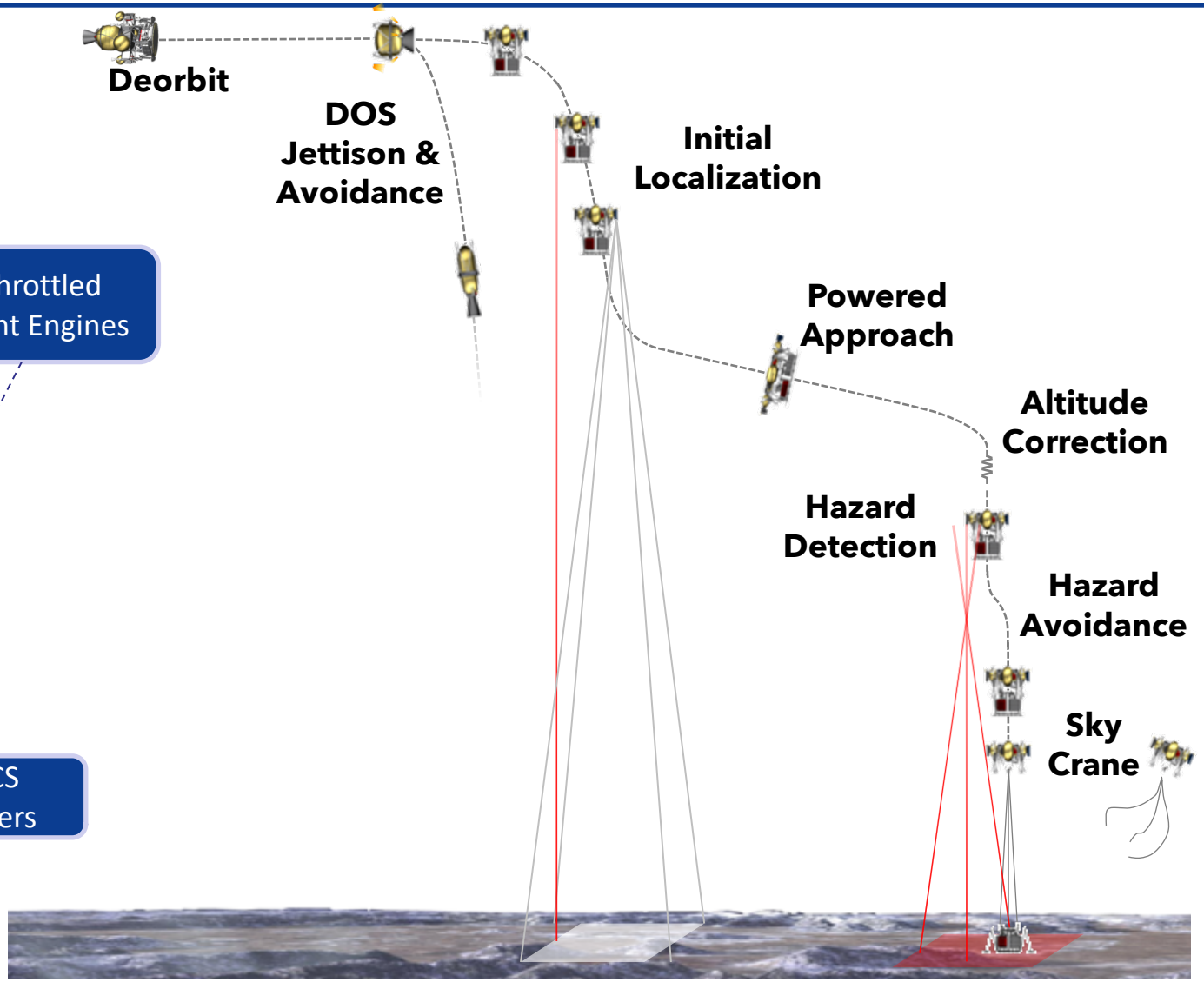

Baseline Lander Stage Configuration

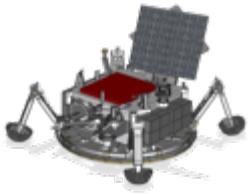

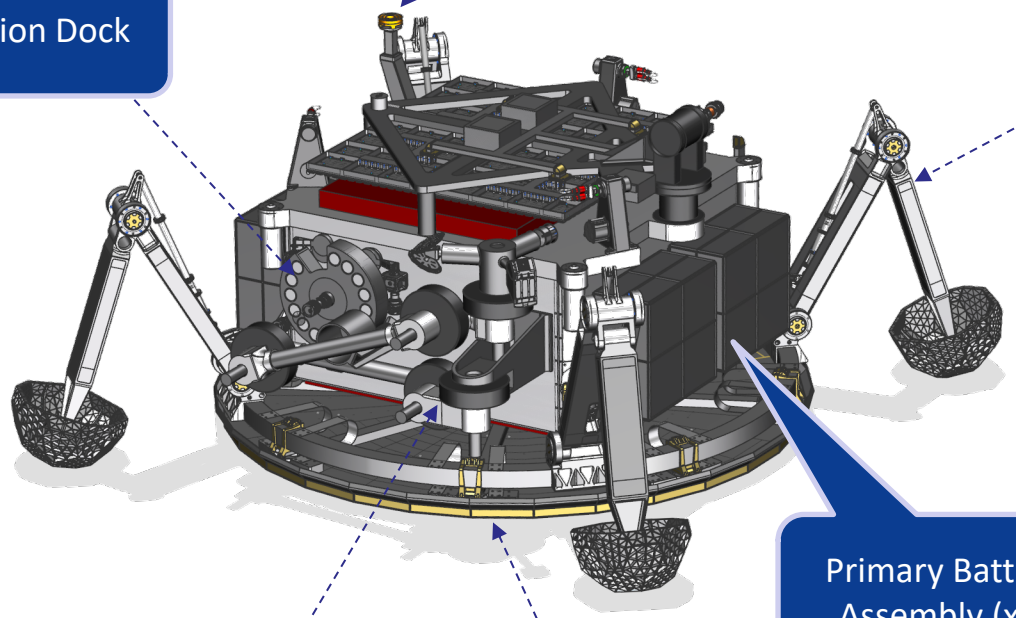

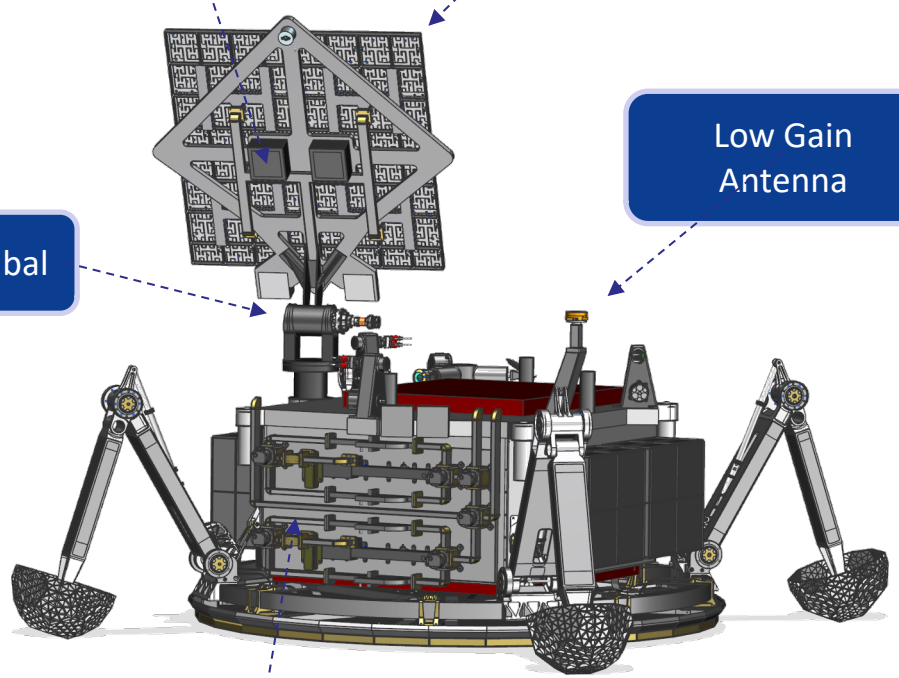

Surface Mission Concept Challenges

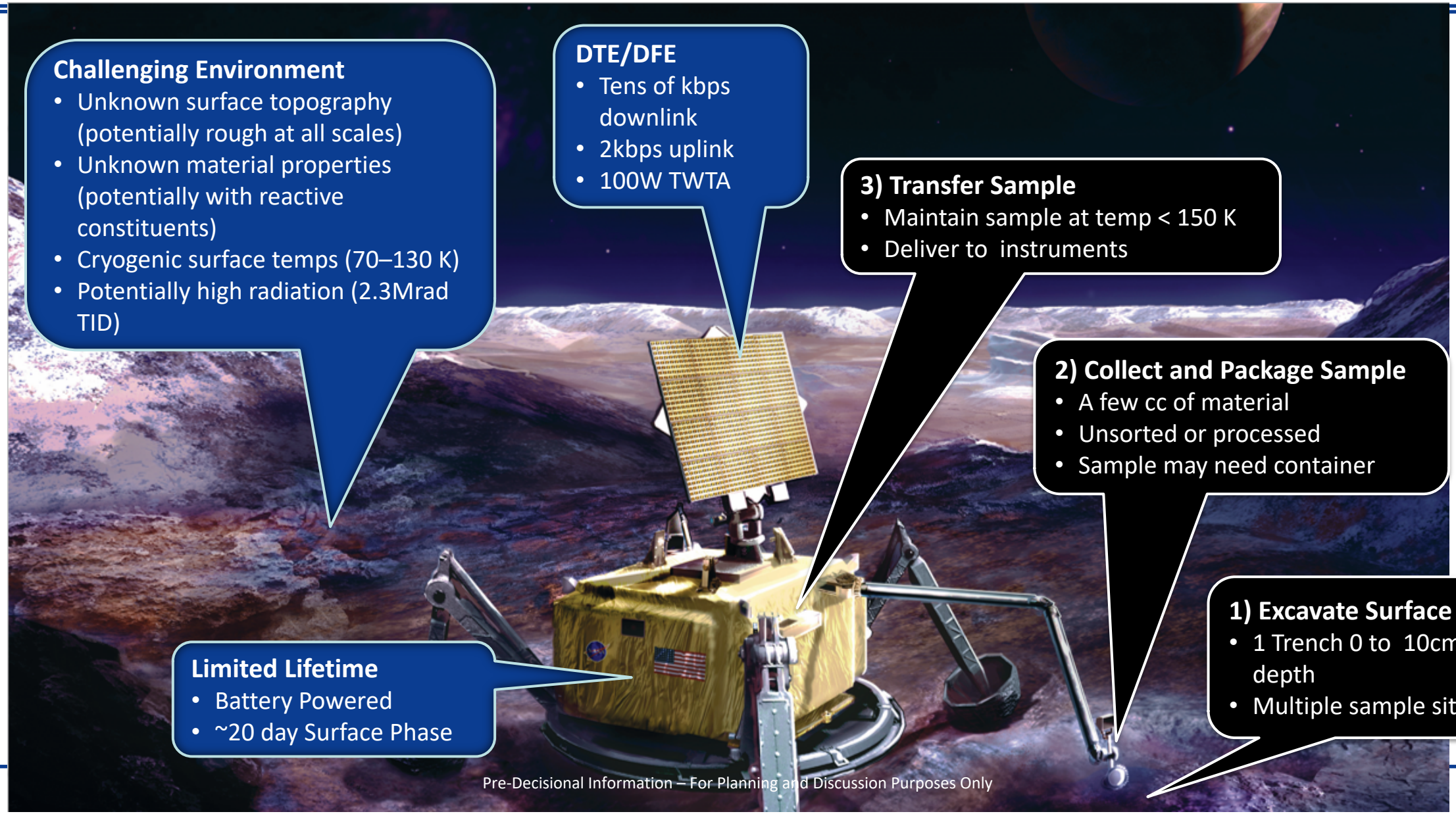

Challenging Environment
- Unknown surface topography (potentially rough at all scales)
- Unknown material properties (potentially with reactive constituents)
- Cryogenic surface temps (70–130 K)
- Potentially high radiation (2.3Mrad TID)

DTE/DFE
- Tens of kbps downlink
- 2kbps uplink
- 100W TWTA

3) Transfer Sample
- Maintain sample at temp < 150 K
- Deliver to instruments

2) Collect and Package Sample
- A few cc of material
- Unsorted or processed
- Sample may need container

1) Excavate Surface
- 1 Trench 0 to 10cm depth
- Multiple sample sites

Limited Lifetime
- Battery Powered
- ~20 day Surface Phase

Pre-Decisional Information – For Planning and Discussion Purposes Only

Not your Mars Experience

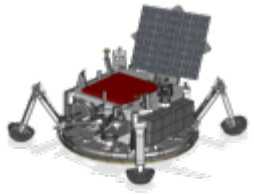

- Data pipe is much smaller – this ocean world is a lot farther away
- There may be no environmental advantage to day or night
- Lander scale knowledge of the surface will not be known until we arrive
- Very different contact frequency
  - Mars: UHF relay twice a day for short durations at high data rates (up to 1 Mbps)
  - Europa Lander: 36 hrs DTE while earth in view at very low data rates (~tens of kbps), 36 hours of no communications,
- Radiation effects may disrupt electronics
- Lifetime is always slipping away - No power generation, primary batteries only
  - Flexibility isn't as important as lifetime
- Cannot afford a ground directed operations strategy that isn't optimized for limited lifetime
  - GITL time to decide, deduce, plan, react, contemplate – all cost lifetime
  - Autonomy, self-reliance and efficiency enable success in the limited lifetime

Successful mission in 20+ days is beyond our Mars in-situ mission experiences: we have to be different

Basic Surface Reference Mission

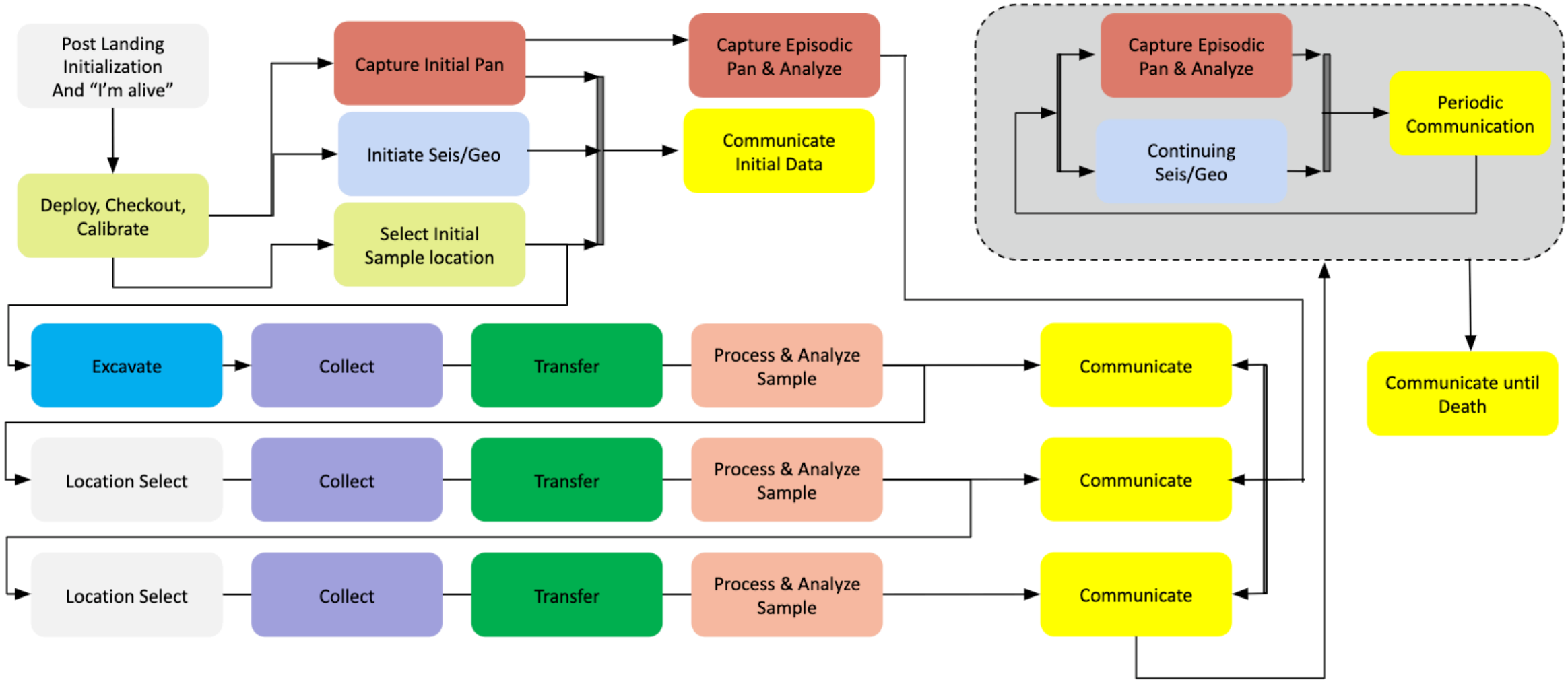

Energy & GITL Sizing Timeline

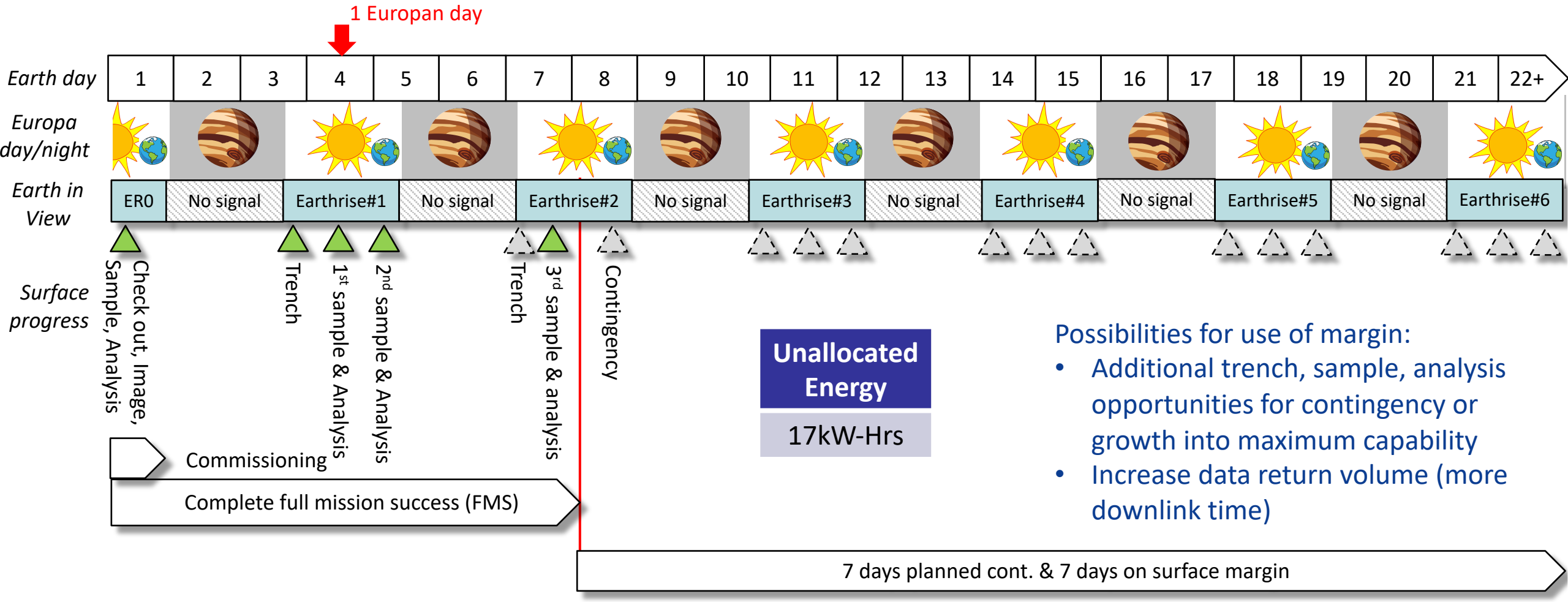

Unallocated Energy

17kW-Hrs

Possibilities for use of margin:

- Additional trench, sample, analysis opportunities for contingency or growth into maximum capability
- Increase data return volume (more downlink time)

Use Case for Ground-in-the-Loop Operations

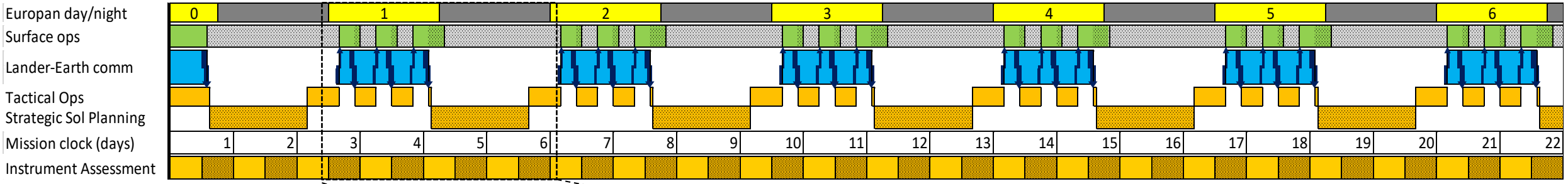

36 hours of communications available only when Earth in view

Example Use Case for design:

- Start each Earth-in-view (EIV) period with an uplink opportunity
- Downlink when critical data is ready for transmission
- Downlink vehicle and plan status before EIV period ends
- Additional opportunities for uplinks to adjust plan within EIV

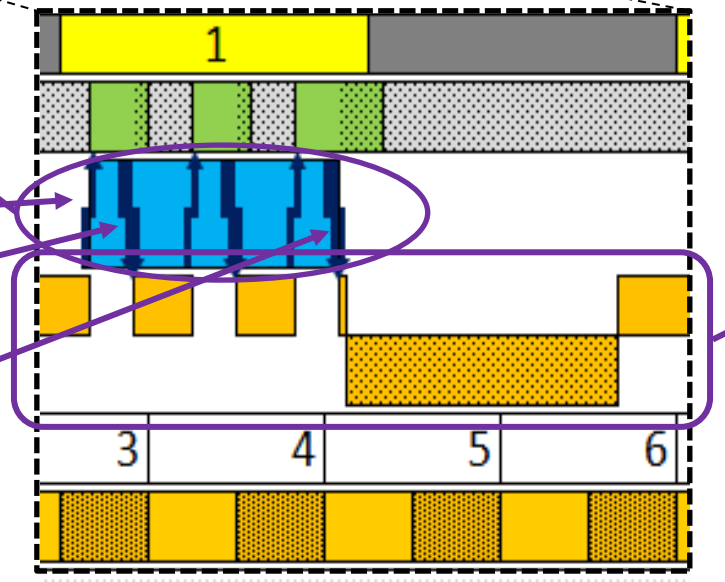

One Europan Sol Commanding Opportunities

Opportunities for Ground-in-the-Loop (GITL) supports long periods of strategic planning alternating with short bursts of tactical planning

Ground Ops durations envelop variations in surface scenarios

- 8 hours tactical
- 24 hours strategic

OWLT = ~45 min

Europa Lander Status

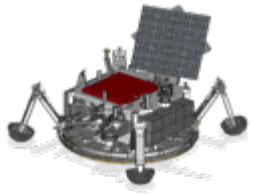

- Europa Lander pre-Project status
  - Held delta-Mission Concept Review (MCR) in Nov. 2018
    - "The review board (chaired by Bobby Braun) cannot recall a pre-phase A planetary science concept at this advanced level of fidelity"
  - FY19 budget signed, but near-term budgets unlikely to include funding levels required for new start
- NASA selected 14 potential instruments for maturation under Instrument Concepts for Europa Exploration 2 (ICEE-2) @ ~$2M each for 2 years
  - Funded out of FY18 budget
- High-priority Advanced Development maturation tasks have begun
  - Reduces flight development risk
  - Many tasks applicable to projects beyond Europa Lander

Advanced Development Activities

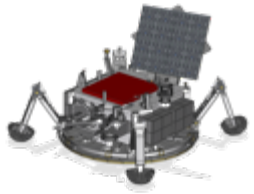

- Update launch opportunities and perform flight system impact assessment
  - Launch Period Survey and Interplanetary Trajectories
  - Navigating 3-body arrival with a short period
  - Support to Clipper Reconnaissance Focus Group
  - Assess DDL/Nav trade space

- De-orbit, Descent, and Landing (DDL)
  - DDL sensors
    - Reduce sensor hardware and algorithm development risk
  - Landing
    - Prototype and test landing system (legs, feet, bellypan) concepts for very rugged terrain
  - Propulsion
    - Prototype and test low-thrust throttleable engine
    - Environmentally test solid rocket motor propellant and ignition system

Advanced Development Activities

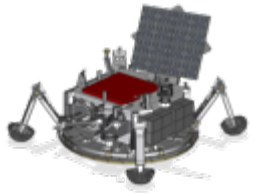

- Surface
  - Sampling
    - Prototype and environmentally test excavation, acquisition, and sample transfer techniques
      - Interact with ICEE-2 selectees to conduct rapid-prototype evaluation of interfaces
    - Develop approaches to maintain samples <150K
  - Autonomy: Develop and test concepts for highly autonomous operations
    - Develop software simulation and hardware testbed for development of autonomy designs
    - Mature autonomy sensing, closed-loop control, and computational requirements
  - Resources (size/weight/power/life/computation)
    - Develop and test lightweight, low-power motor controller
    - Continue radiation and life testing of primary batteries
    - Develop and test full-scale High-Gain Antenna
  - Planetary Protection/Contamination Control
    - Conduct planetary protection/bioburden analyses to mature payload and flight system requirements
    - Continue development of Terminal Sterilization System
    - Evaluate outgassing properties of radiation-exposed materials
    - Assess plume product interaction and alteration with cryogenic ices

Back up slides

Baseline Deorbit Vehicle Configuration and Events

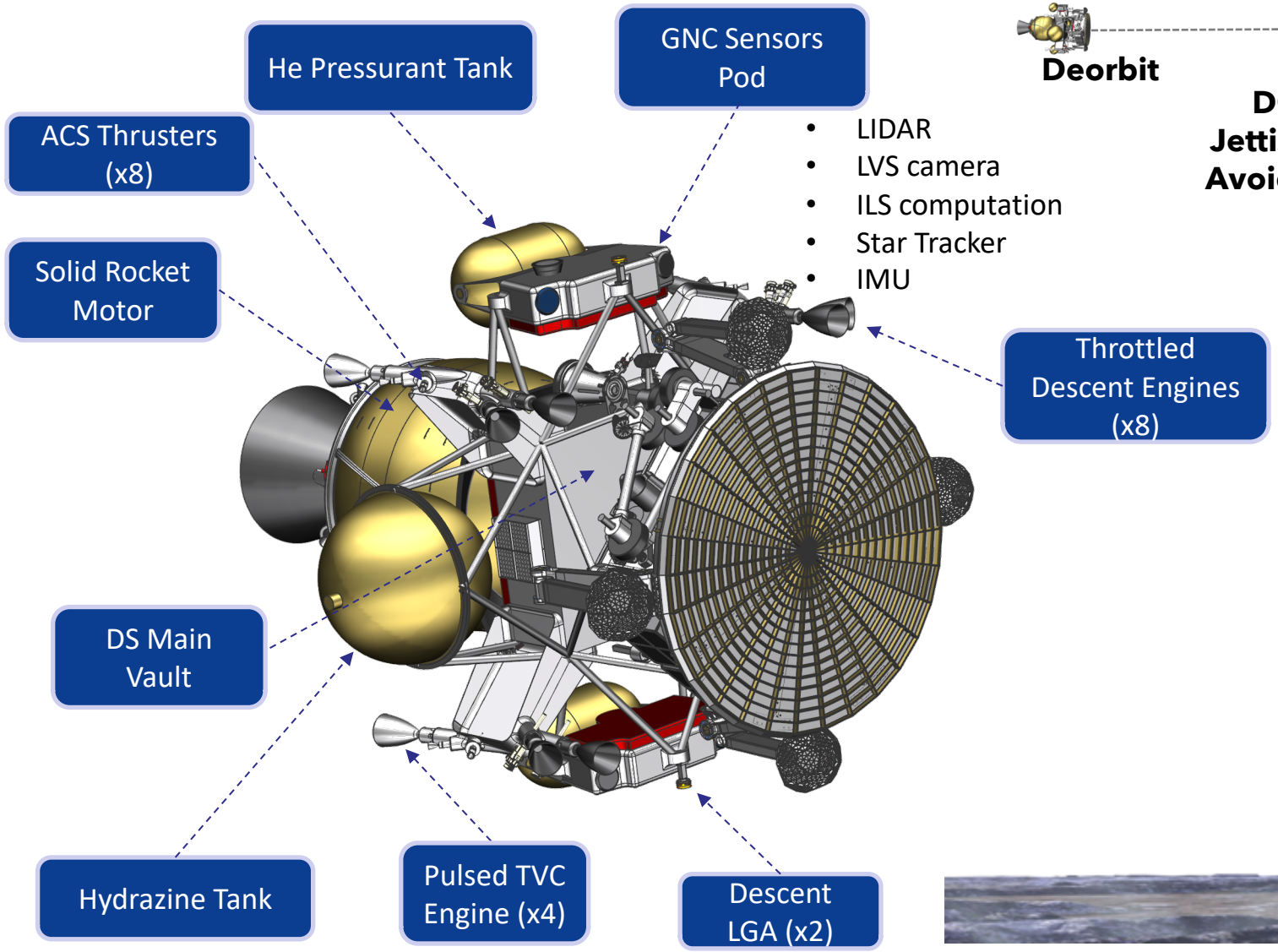

- LIDAR
- LVS camera
- ILS computation
- Star Tracker
- IMU

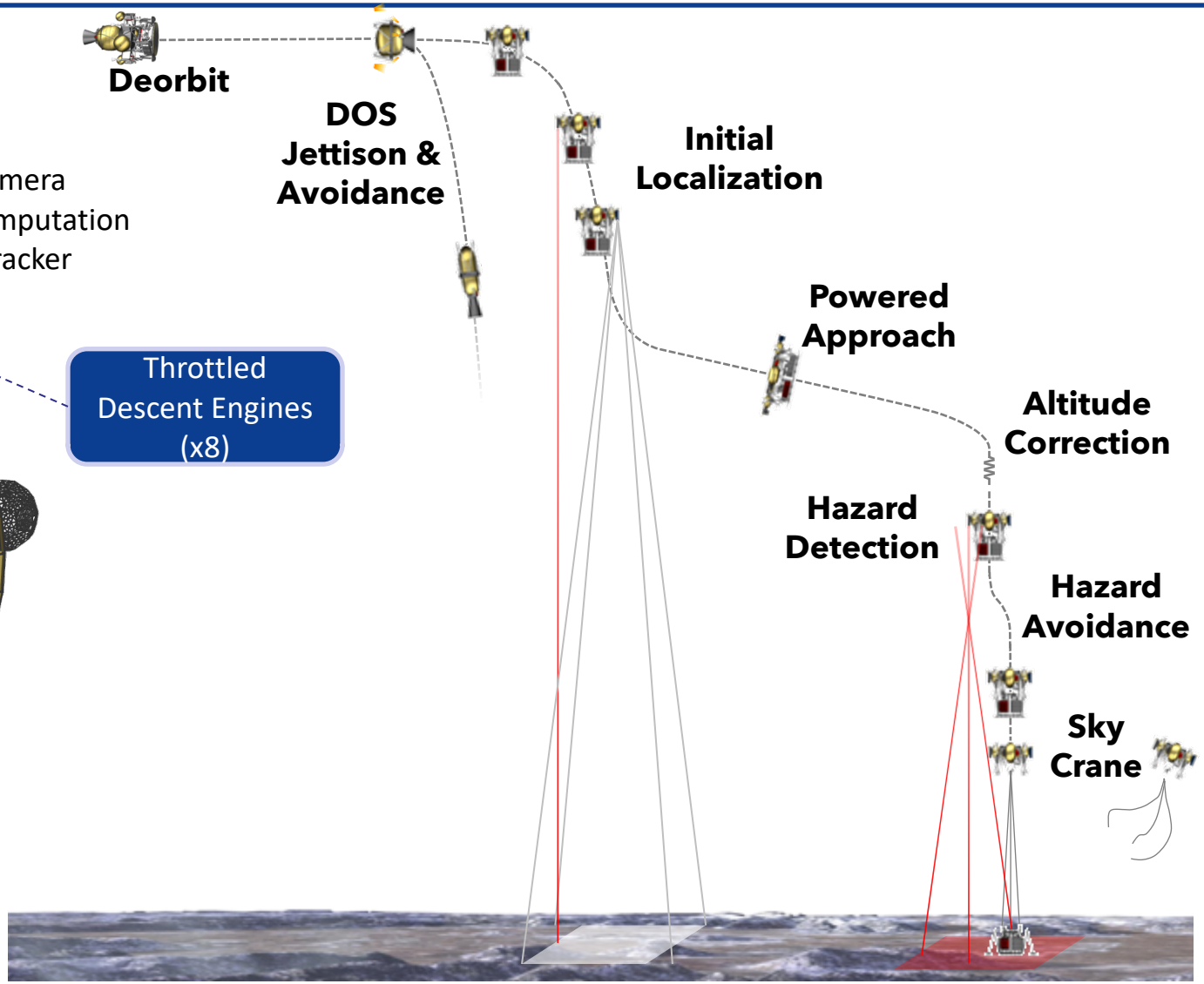

22 Earth Days

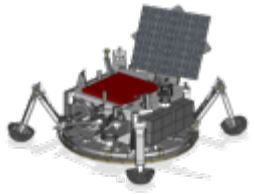

How could we be confident that we can do the surface mission in 22 Earth days?

- Margin
  - We have constructed timelines with contingency that results in significant energy margin
- Autonomous and automated functions
  - Self-reliant for all aspects of the surface mission nominal and many off-nominal scenarios
  - Could construct a fully autonomous mission but expect to have GITL for science input
- Robust verification for sampling an uncertain surface
  - Demonstrate over a broad collection of topography and material properties
- Only offering limited flexibility
  - GITL directs high level goals and overall plan but flight system manages execution
  - Anticipate potential for human “want to” with GITL and minimize by design by moving onboard
- Early proof
  - Reference surface mission execution in a prototype testing venue by MDR

Relevant Constraints

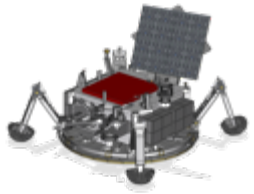

- 49kW-hr Battery
- Hot AFT range Battery/Vault
  - 10 hours of continual operations
  - 1 degC/hour cool down rate
- Comm only during the day (earth in view)
  - Limited bandwidth, dynamic decisional data sets required based on activity status
- Terrain may limit reachable work space
- Limited On-board computation
- Most activities are serial and require an order of ops
- Short tactical timelines for GITL
  - 1WLT = 45min
  - Science decisions are binary in nature
- Final pose and azimuth orientation may limit earth FOV unless managed
- Finite number of sample deliveries
- Non-deterministic timelines for certain activities (trenching/sampling)
- Time to transmit constrained
  - Spontaneous communication requires onboard mgmt. of decisional data generation vs. time to earth set