1.9 THz Silicon Micromachined Multi-Pixel Receiver Instrument

Goutam Chattopadhyay

Jet Propulsion Laboratory, California Institute of Technology, Pasadena, CA, USA

Reference herein to any specific commercial product, process, or service by trade name, trademark, manufacturer, or otherwise, does not constitute or imply its endorsement by the United States Government or the Jet Propulsion Laboratory, California Institute of Technology.

© 2019 California Institute of Technology. Government sponsorship acknowledged.

Acknowledgement

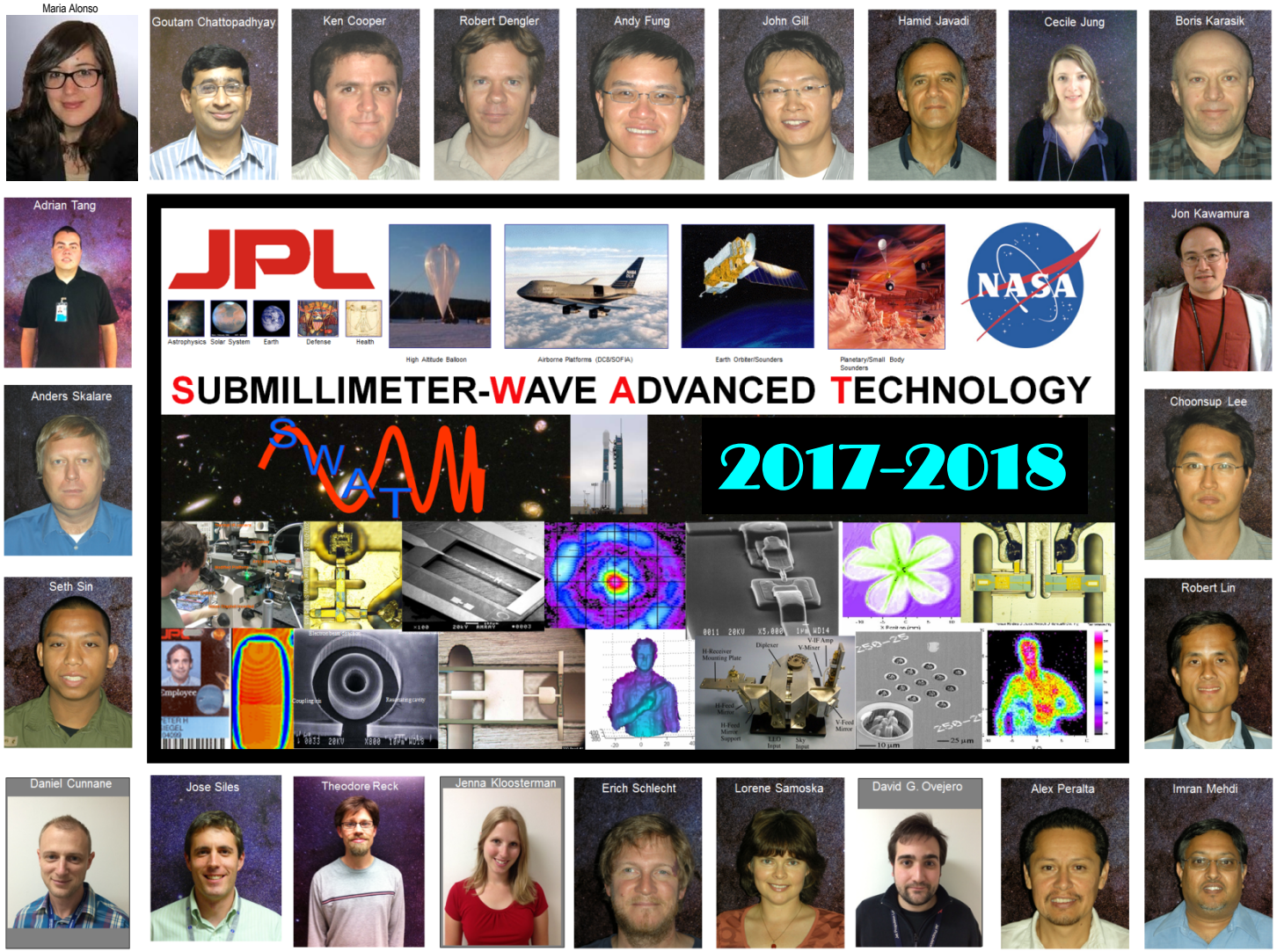

This work was carried out at the California Institute of Technology, Jet Propulsion Laboratory, under contract with the National Aeronautics and Space Administration.

Terahertz (Submillimeter) Waves

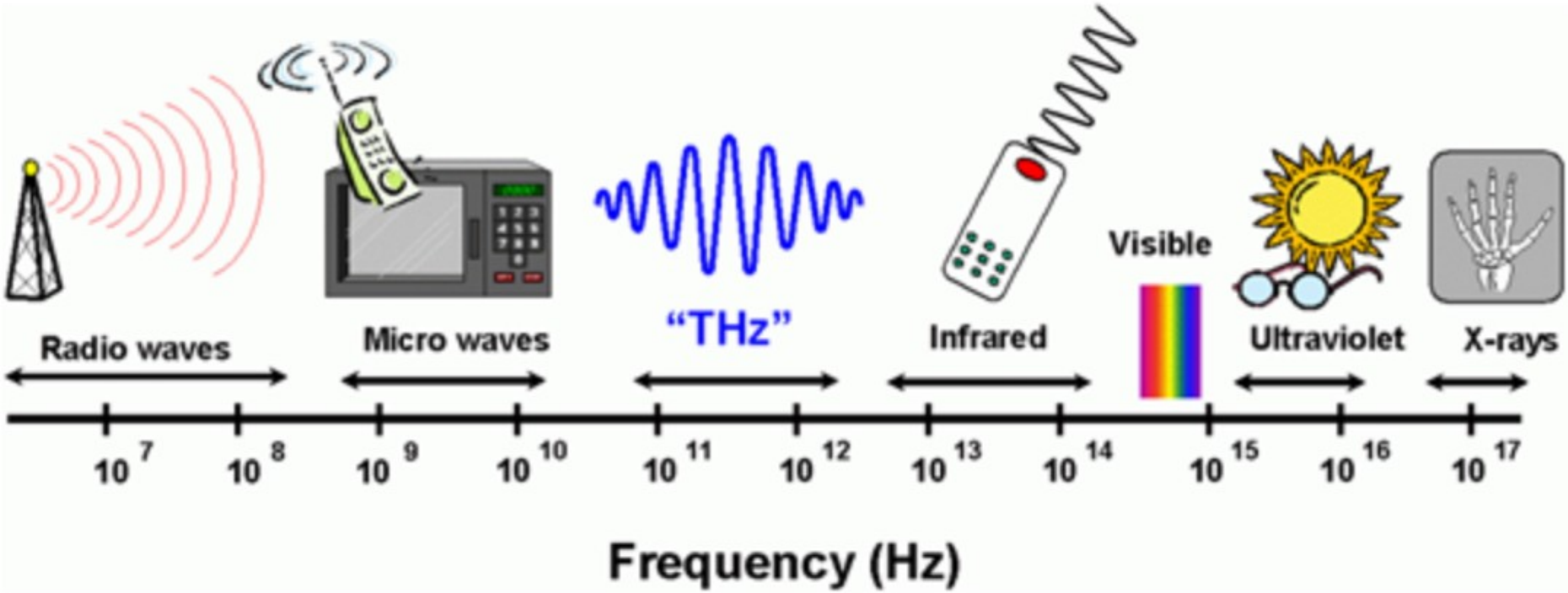

Loosely defined: 1 mm > λ > 100 μm

300 GHz < ν < 3 THz

Most of the radiation in the Universe is emitted at submillimeter-wavelengths, peaking at 3 THz (excluding CMB radiation).

Terahertz Science: Big Bang

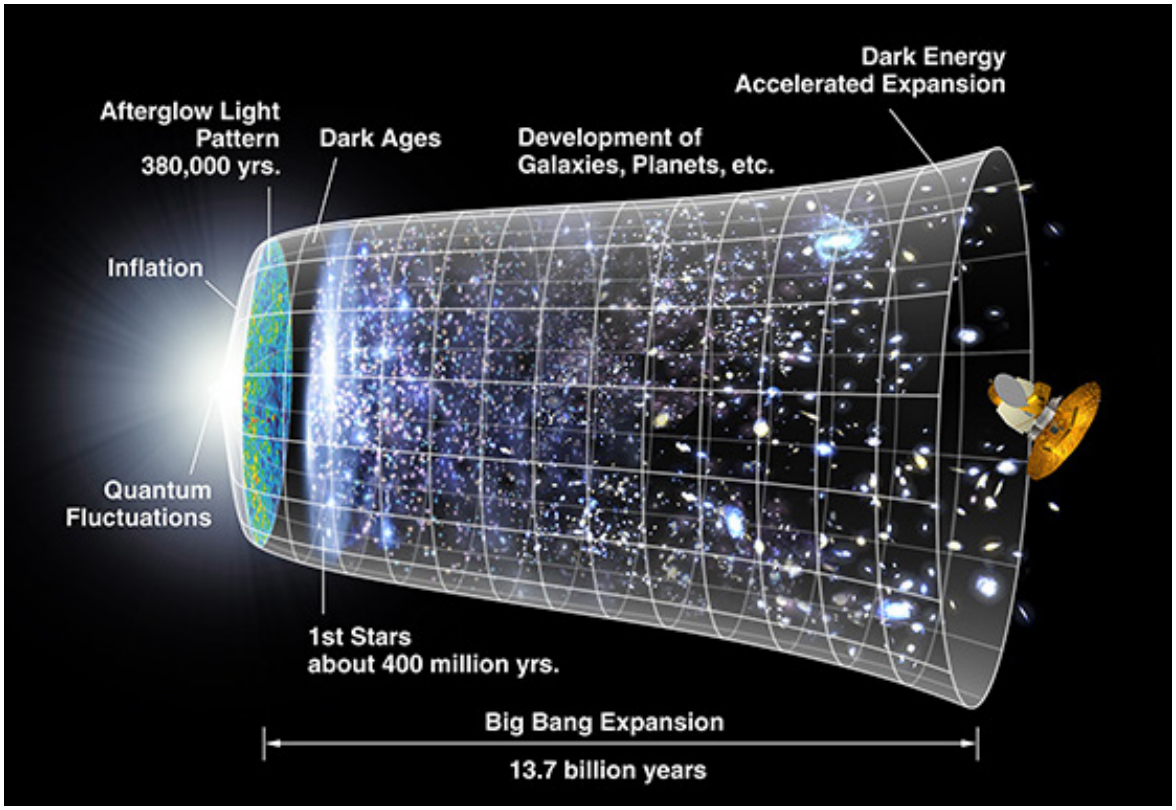

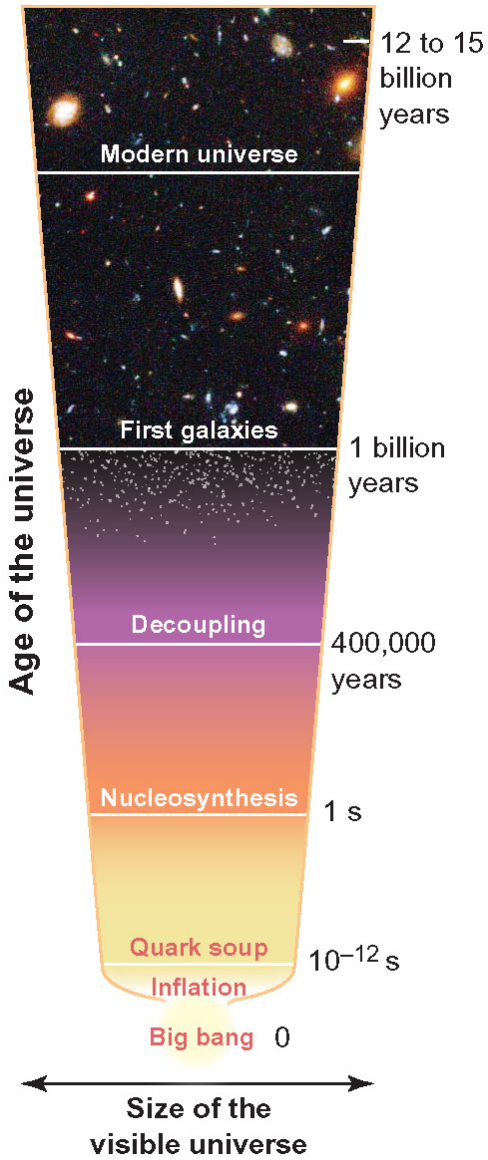

History of our Universe: Started with a Big Bang, and here we are, after 13.8 billion years!

Terahertz Science: Water

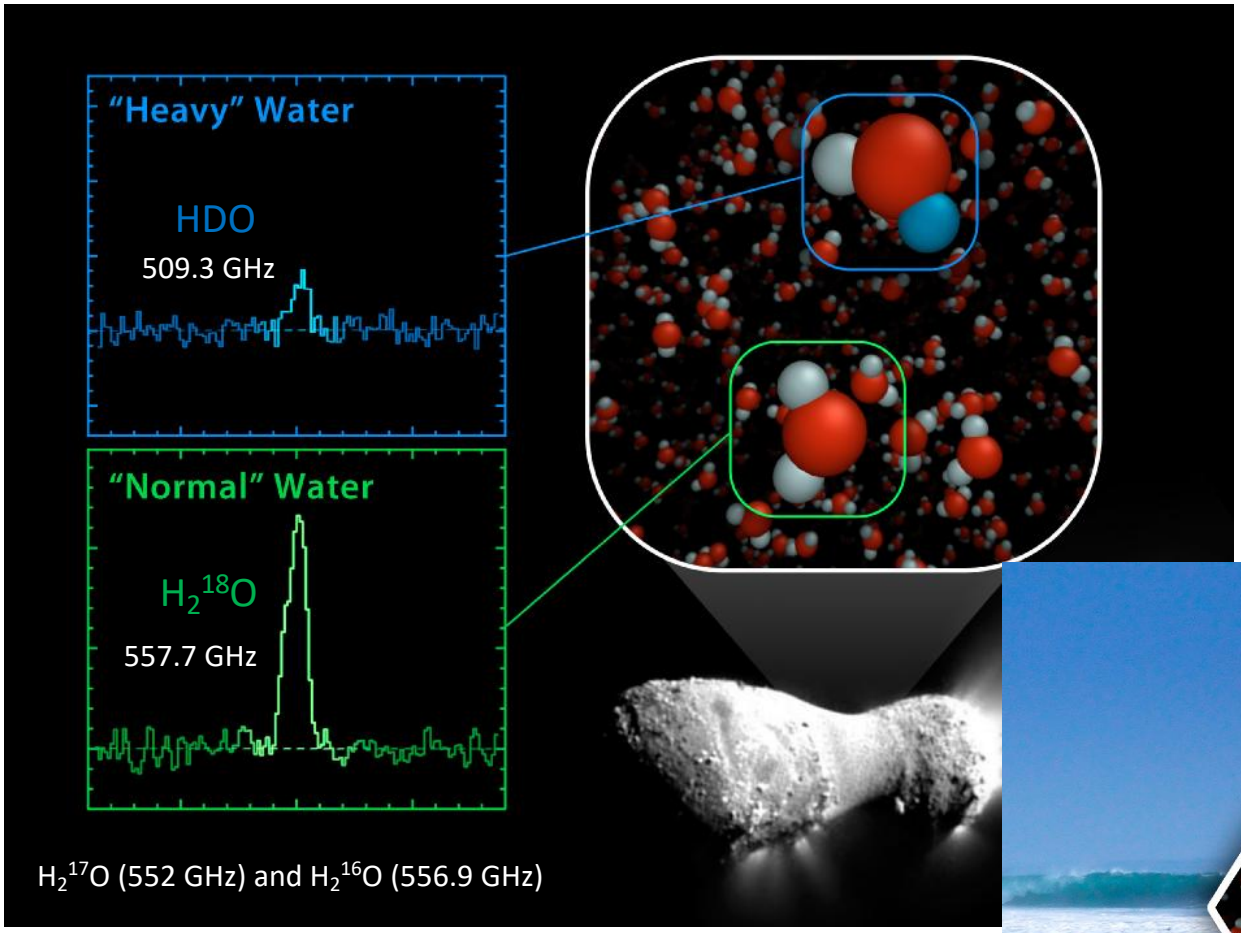

"Earth's water may have come from comets!"

Herschel Space Observatory's HIFI Instrument (JPL).

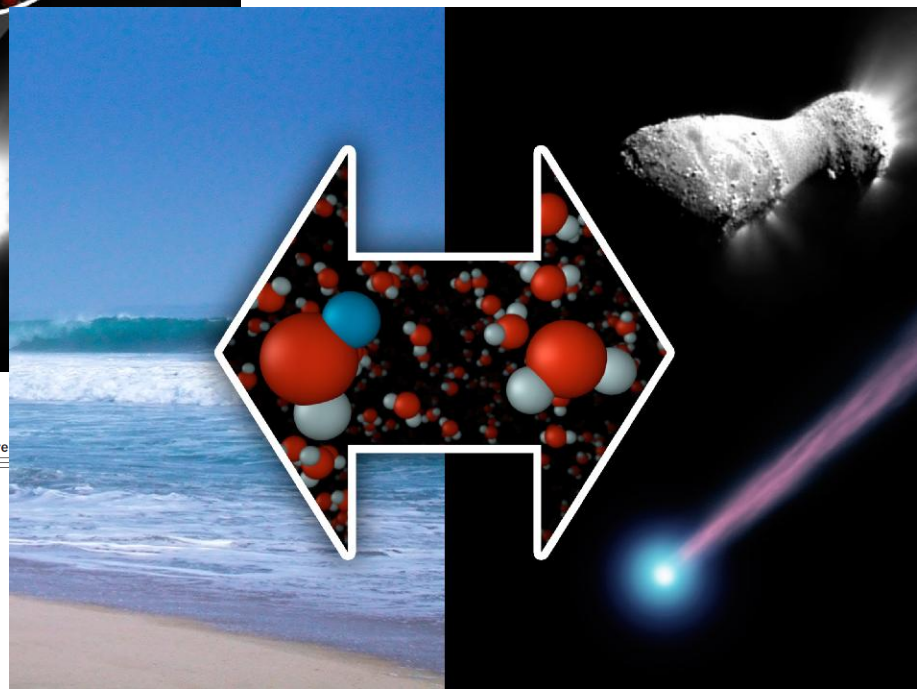

LETTER

doi:10.1038/nature

Nature, October 2011

Ocean-like water in the Jupiter-family comet 103P/Hartley 2

Paul Hartogh[1], Dariusz C. Lis[2], Dominique Bockelée-Morvan[3], Miguel de Val-Borro[1], Nicolas Biver[3], Michael Küppers[4], Martin Emprechtinger[2], Edwin A. Bergin[5], Jacques Crovisier[3], Miriam Rengel[1], Raphael Moreno[3], Slawomira Szutowicz[6] & Geoffrey A. Blake[2]

Terahertz Science: ROSETTA

Science, Jan. 23, 2015

MIRO Instrument on ROSETTA Orbiter

Subsurface properties and early activity of comet 67P/Churyumov-Gerasimenko

Samuel Gulkis,[1]‡ Mark Allen,[1] Paul von Allmen,[1] Gerard Beaudin,[2] Nicolas Biver,[3] Dominique Bockelée-Morvan,[3] Mathieu Choukroun,[1] Jacques Crovisier,[3] Björn J. R. Davidsson,[4] Pierre Encrenaz,[2]* Therese Encrenaz,[3]* Margaret Frerking,[1] Paul Hartogh,[5] Mark Hofstadter,[1] Wing-Huen Ip,[6] Michael Janssen,[1] Christopher Jarchow,[5] Stephen Keihm,[1] Seungwon Lee,[1] Emmanuel Lellouch,[3] Cedric Leyrat,[3] Ladislav Rezac,[5] F. Peter Schloerb,[7,1] Thomas Spilker[1]†

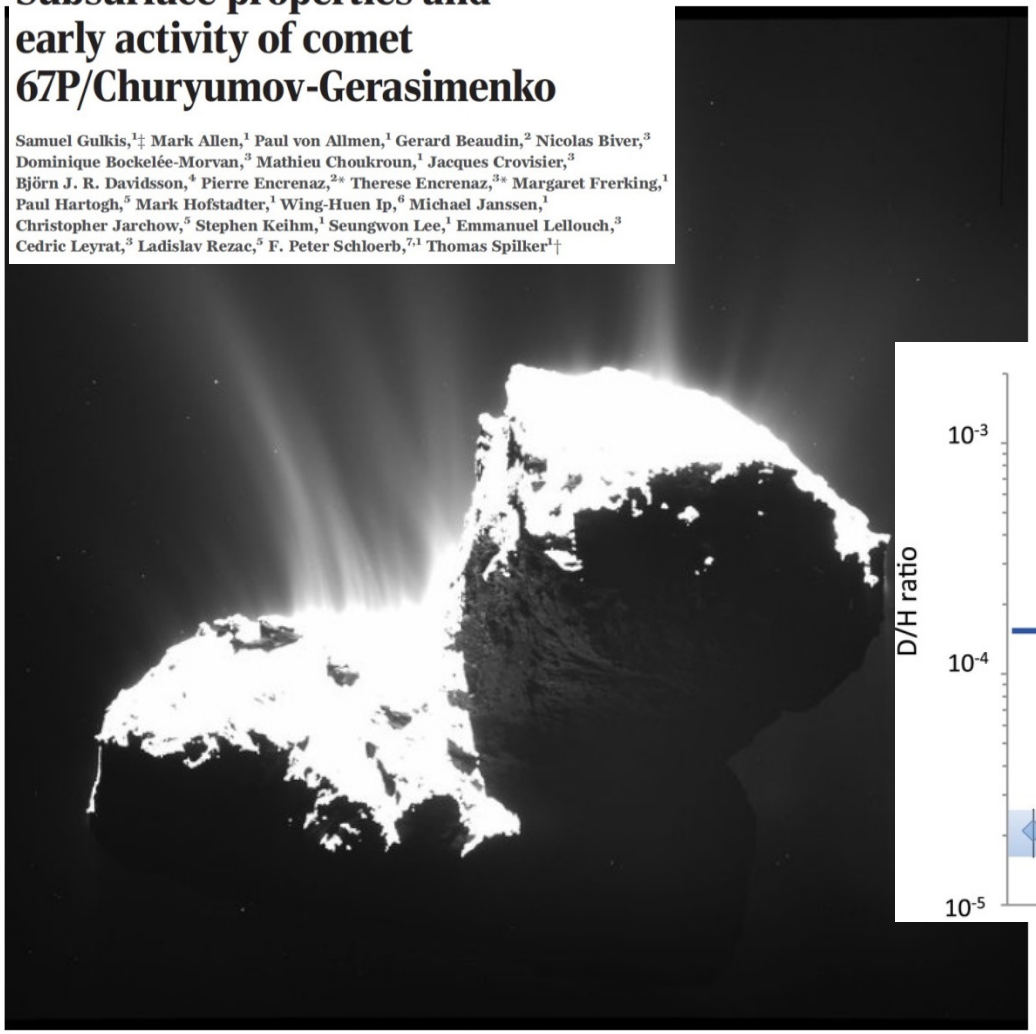

November 2014 image of 67P comet showing faint gas and dust.

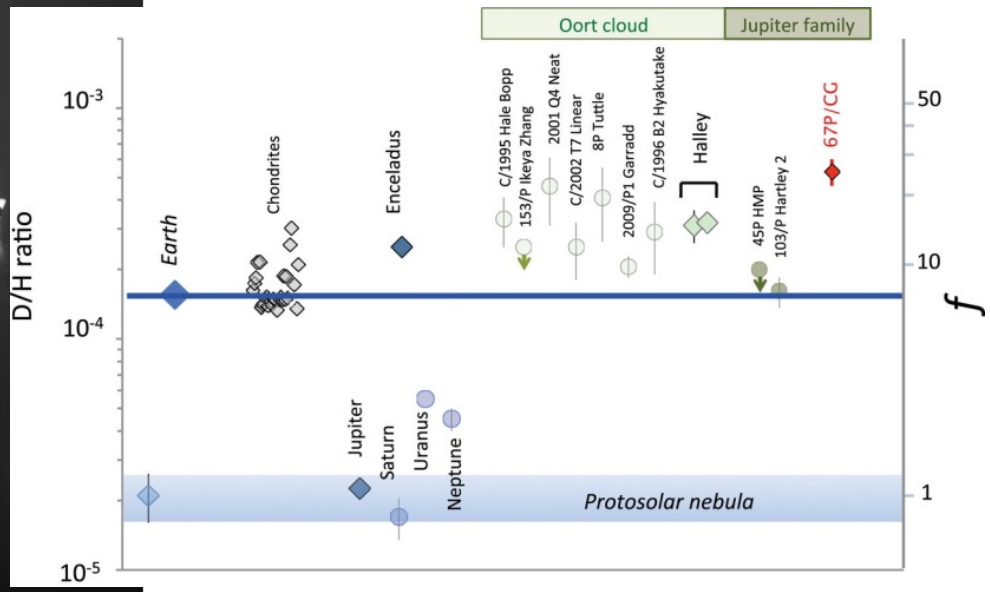

Terahertz Science: Enceladus

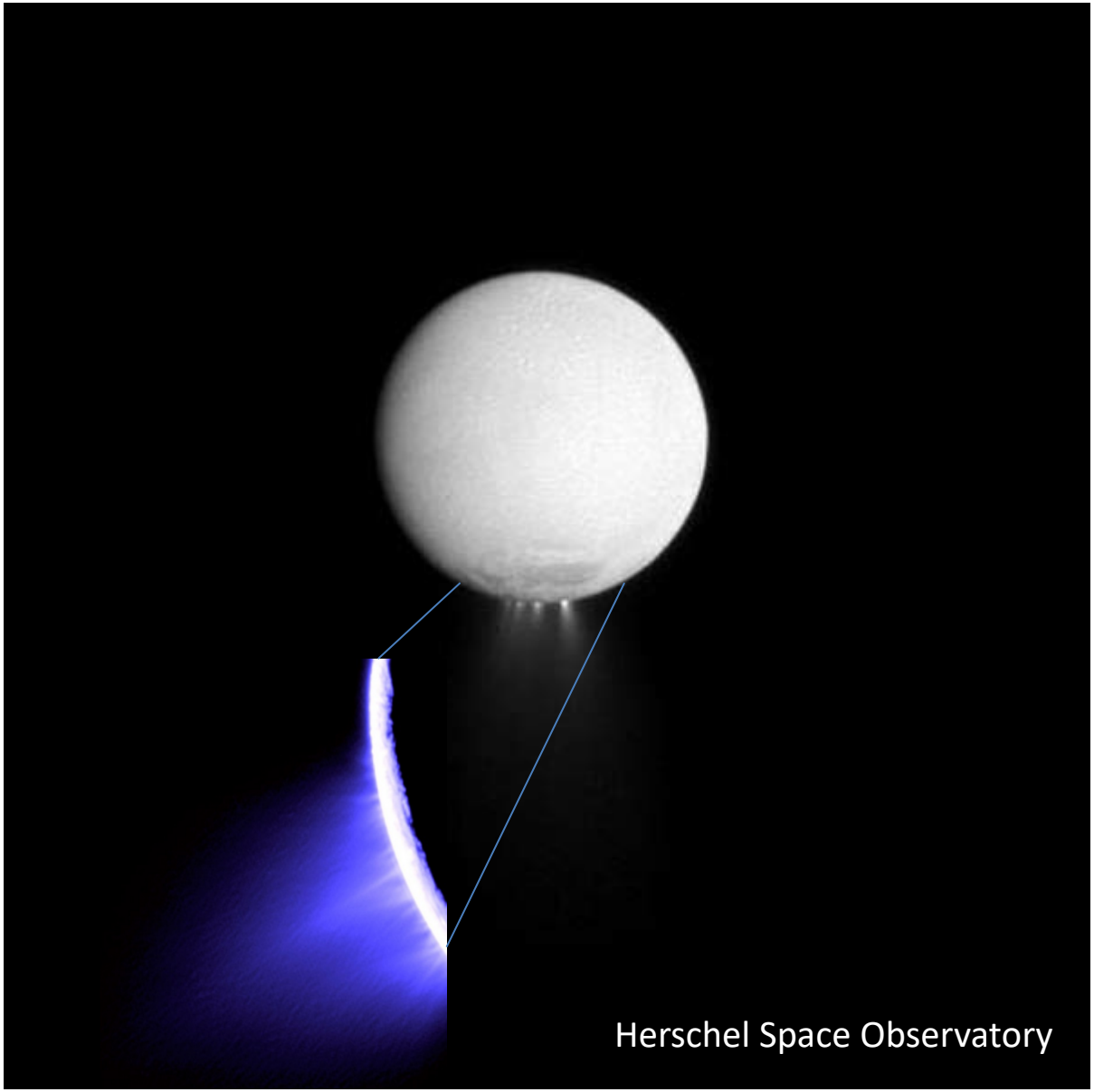

Saturn's moon Enceladus rains down water on Saturn!

Now we know where the water vapor in Saturn's upper atmosphere come from!

Enceladus is the only moon in the Solar System known to influence the chemical composition of its parent planet.

Terahertz Science: Europa

SPACE.COM

TECH SPACEFLIGHT SCIENCE & ASTRONOMY SEA

TRENDING: Skywatching Guide // Space Webcasts // Mars Rover Curiosity // Solar Flares // Space Photos

Jupiter's Icy Moon Europa: Best Bet for Alien Life?

By Nola Taylor Redd, Space.com Contributor | August 22, 2014 06:00am ET

107 Share

30 Tweet

35 Submit

2 Reddit

More

Under a thick crust of ice, Europa might have an ocean warmed by tidal interactions with Jupiter. This tidal flexing could also produce a geologically active core that might in turn create hydrothermal vents on the ocean floor.

Credit: NASA/JPL/Ted Stryk

View full size image

Pin it

WASHINGTON — Jupiter's moon Europa doesn't look like a particularly inviting place for life to thrive; the icy satellite is nearly 500 million miles (800 million kilometers) from the sun, on average.

But beneath its icy crust lies a liquid ocean with more water than Earth contains. This ocean is shielded from harmful radiation, making Europa one of the solar system's best bets to host alien life.

"Europa has the best chance of having life there today," said Britney Schmidt, who studies the moon at the University of Texas at Austin and led the new study appearing in the journal Nature.

Jupiter's moon Europa: Lake theory boosts hopes for life

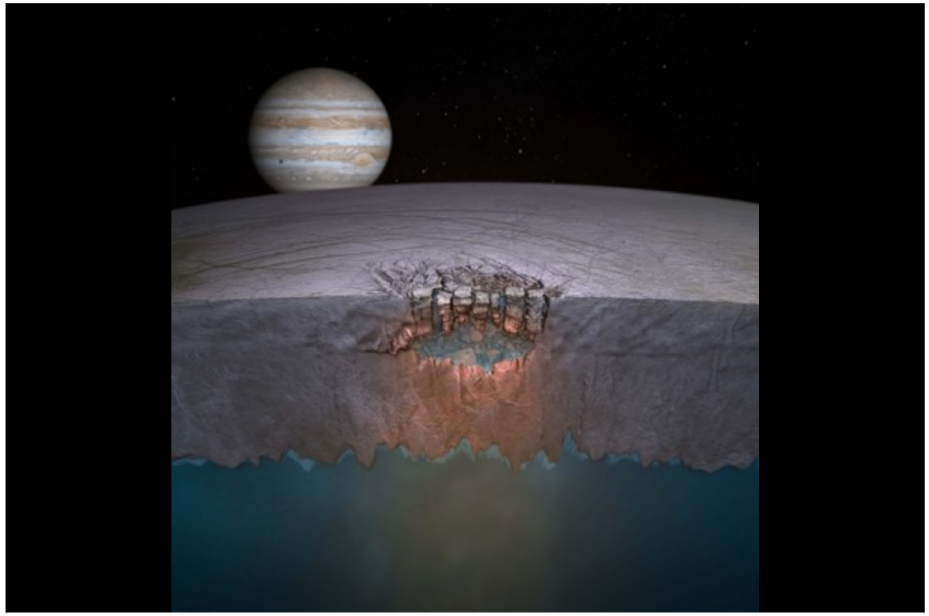

November 16, 2011, Washington Post. Paper in Nature.

Terahertz Science: Europa

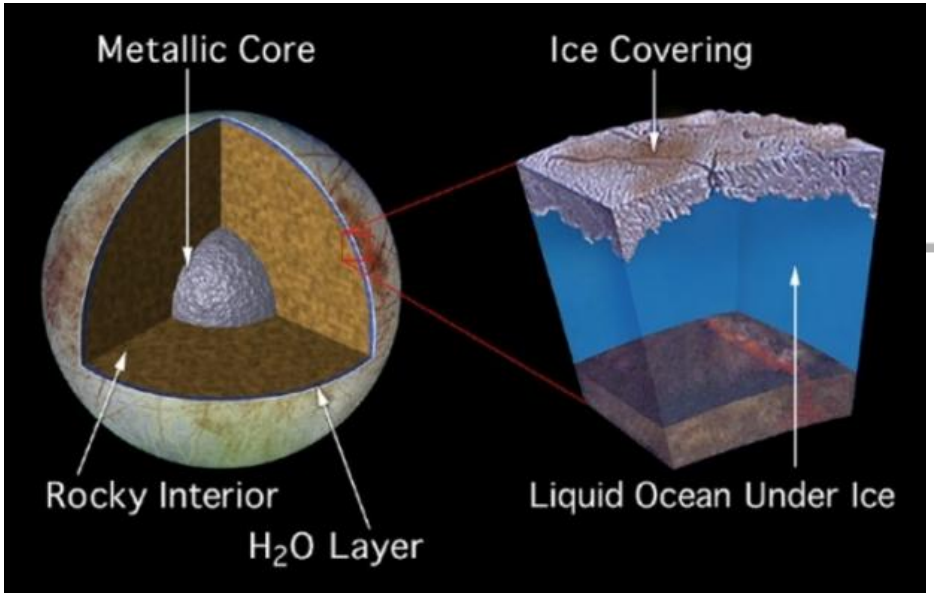

NewScientist Space

Home News In-Depth Articles Opinion CultureLab Galleries Topic Guides

SPACE TECH ENVIRONMENT HEALTH LIFE PHYSICS&MATH

Home | Space | Life | News

Water plumes spark a race to Jupiter moon Europa

- 31 December 2013 by Lisa Grossman
- Magazine issue 2950. Subscribe and save
- For similar stories, visit the Solar System , Space flight and Astrobiology Topic Guide

(NASA/ESA/K. Retherford/SWRI) - This is an artist's concept of a plume of water vapor ejected off the icy surface of Europa. Spectroscopic measurements from NASA's Hubble Space Telescope led scientists to calculate that the plume rises to an altitude of 125 miles and probably rains frost back onto the surface.

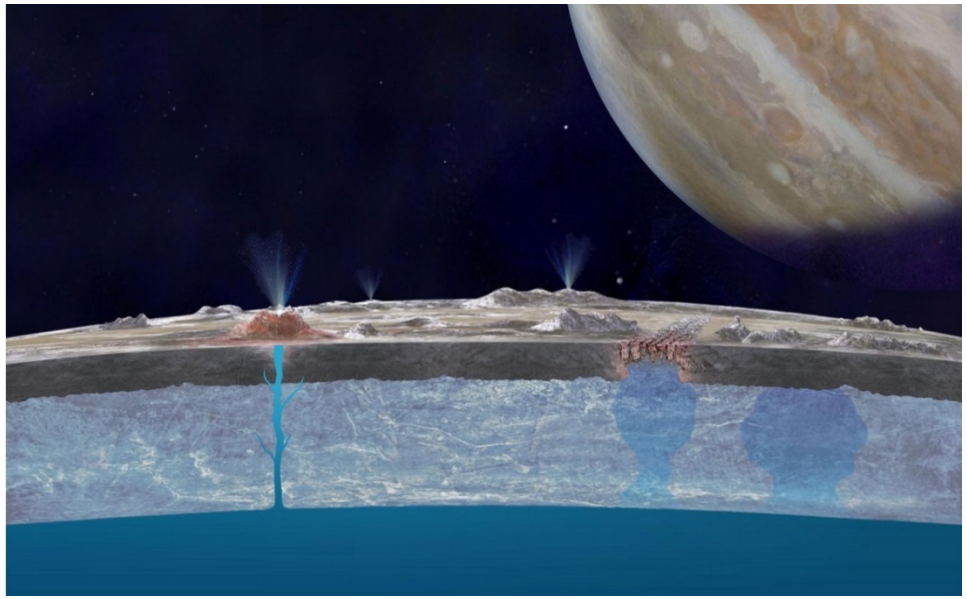

Terahertz Science: Astrophysics

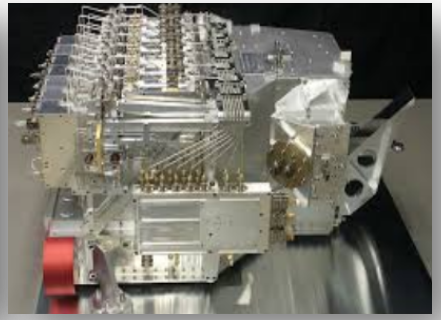

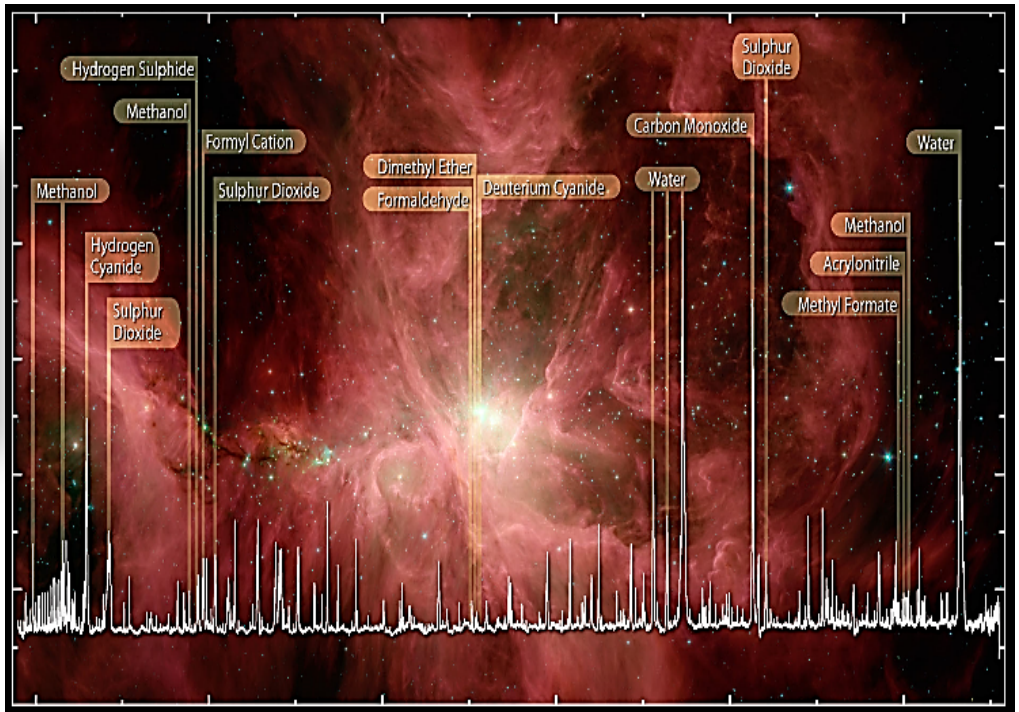

HIFI Spectrum of Water and Organics in the Orion Nebula

© ESA, HEXOS and the HIFI consortium
E. Bergin

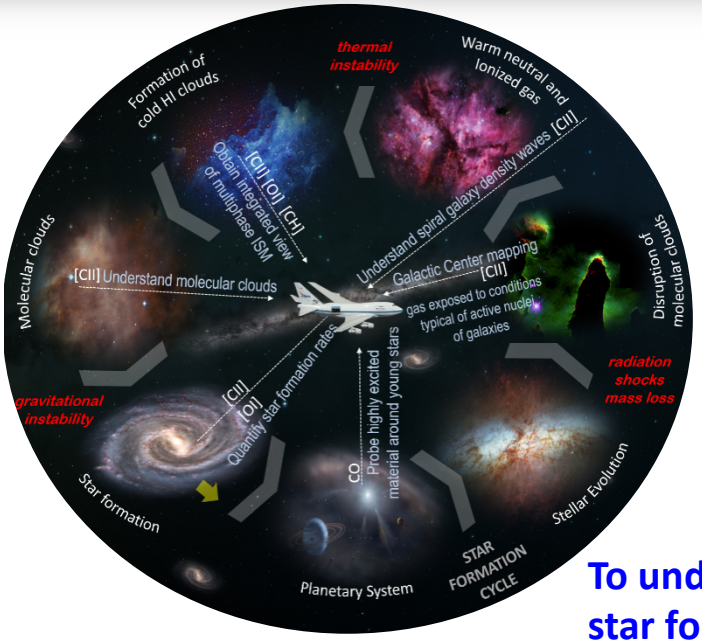

To understand the star formation cycle

Frequency coverage: 480 GHz – 1910 GHz (7 channels, dual pol.)

Mapping Capability

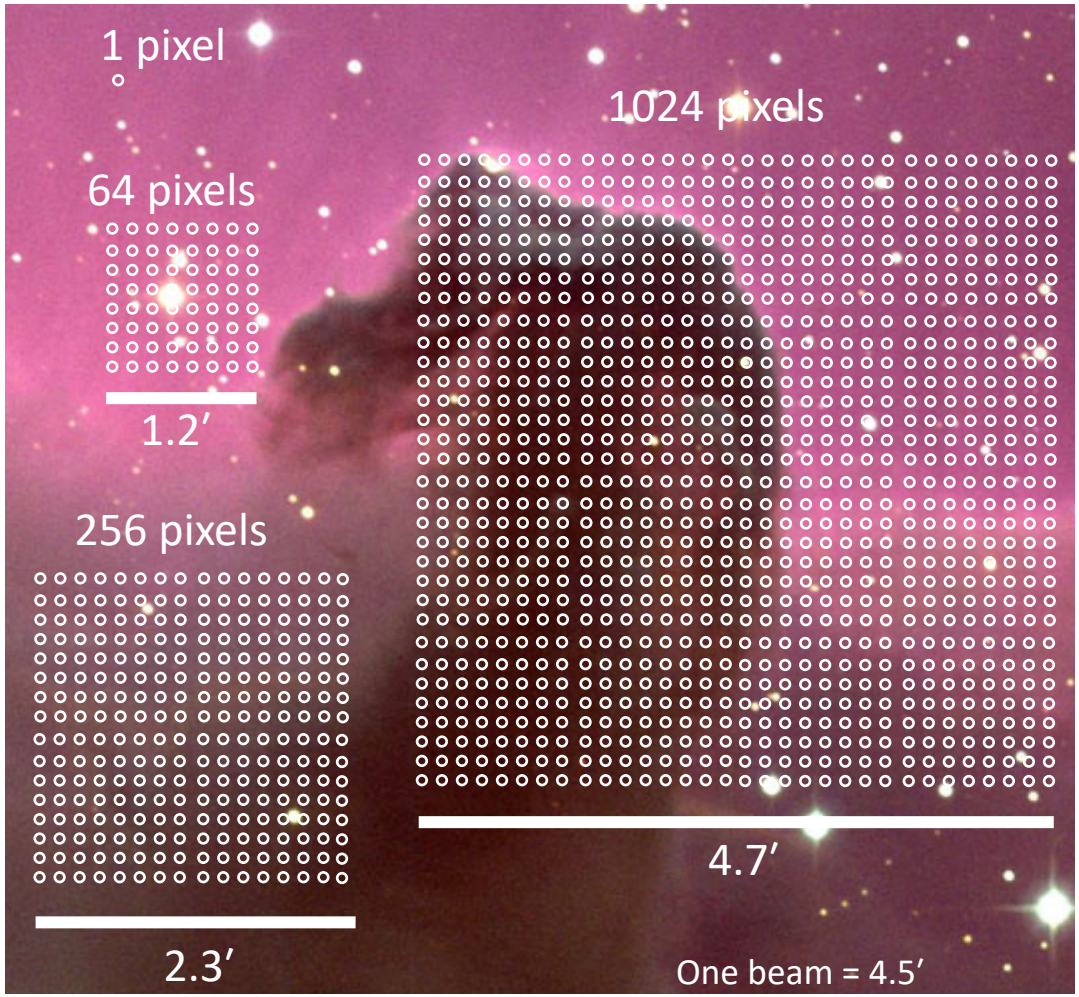

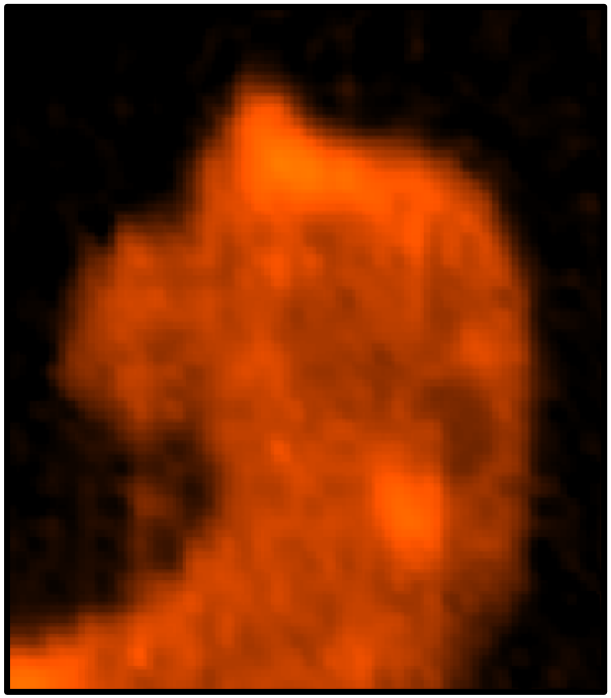

"Submillimeter light" of the CO molecule

Beam spacing in the sky: ~2f/# × λ

Ref: Chris Walker, University of Arizona

Complex and Compact Instruments

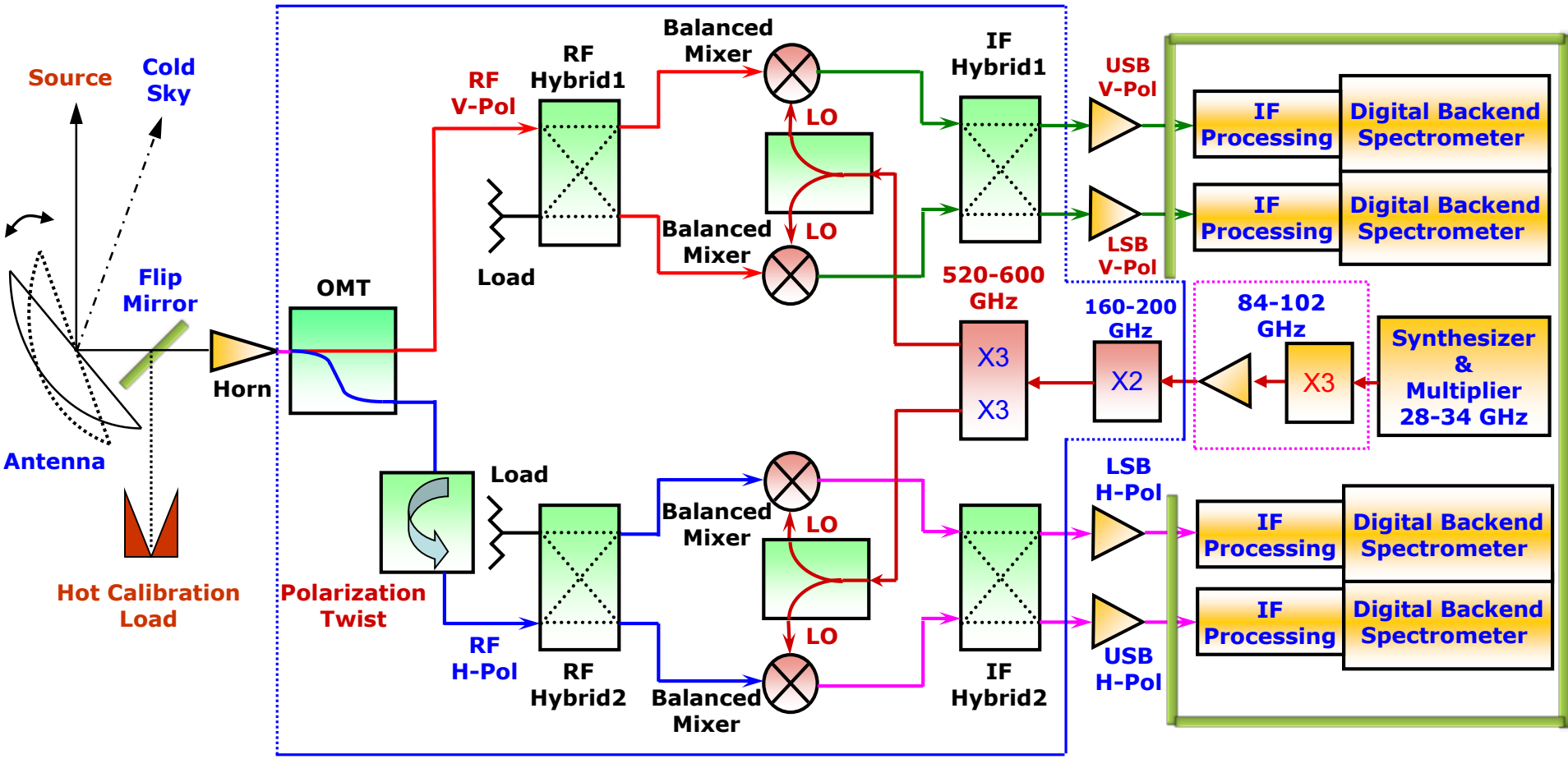

Ref: G. Chattopadhyay, T. Reck, A. Tang, C. Jung-Kubiak, C. Lee, J. Siles, E. Schlecht, Y. M. Kim, M-C F. Chang, and I. Mehdi, "Compact Terahertz Instruments for Planetary Missions," *Proc. 9th European Conference on Antennas and Propagation (EuCAP),* Lisbon, Portugal, April 2015.

Packaging of Terahertz Instruments

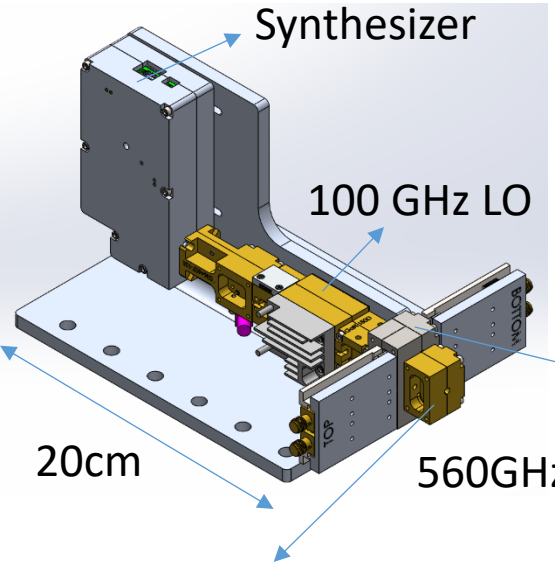

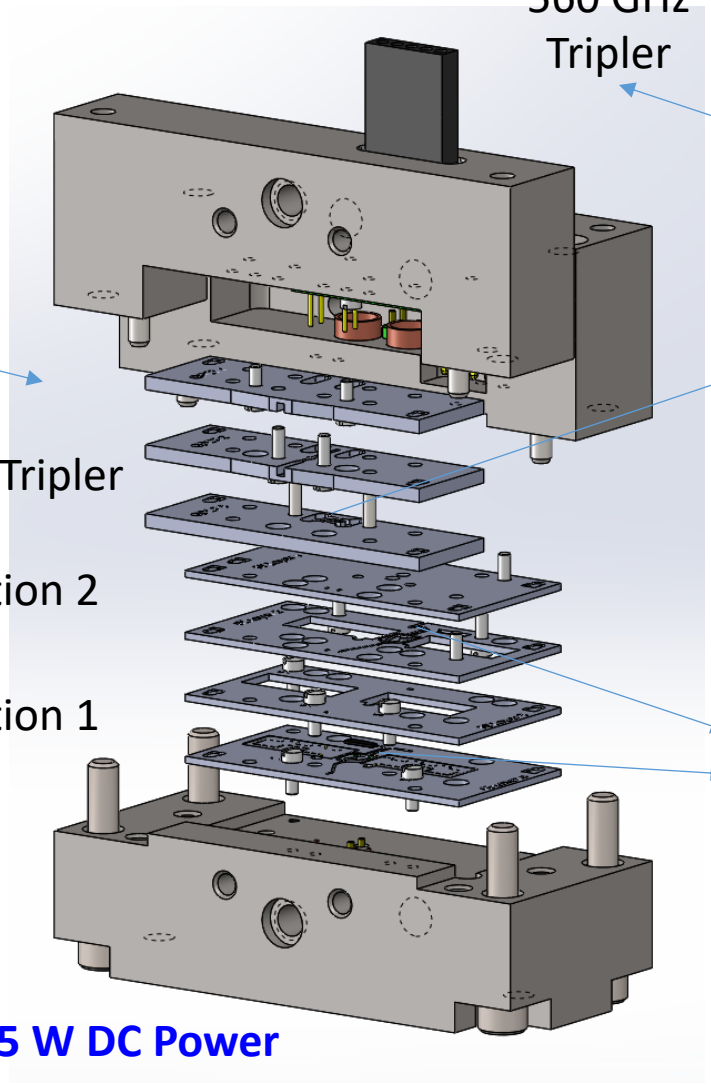

560 GHz
Tripler

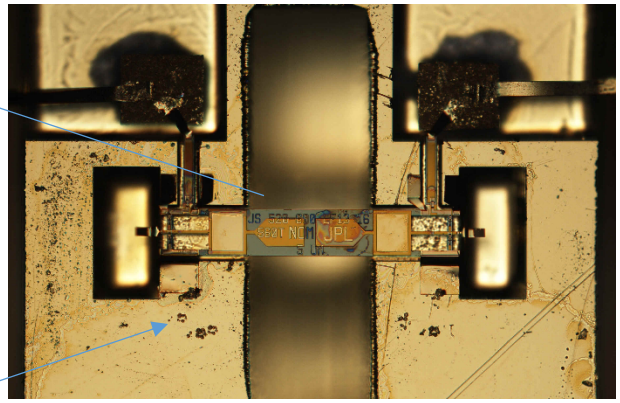

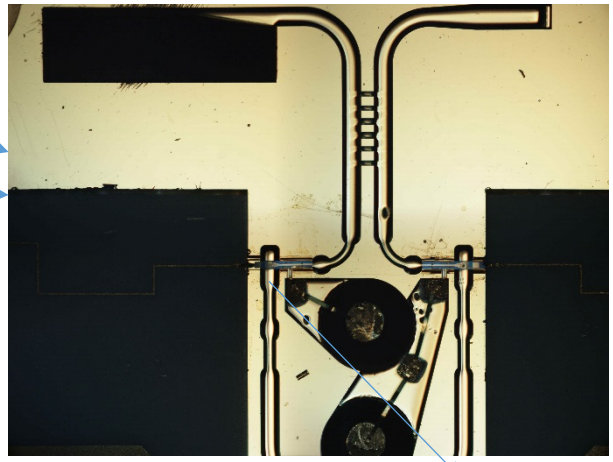

Mixers

40x21x10 cm^3 package, 15 W DC Power

Ref: G. Chattopadhyay, T. Reck, C. Lee, and C. Jung-Kubiak, "Micromachined Packaging for Terahertz Systems," *Proceedings of the IEEE*, vol. 105, no. 6, pp. 1139-1150, June 2017.

Leveraging Smart Phone Technology

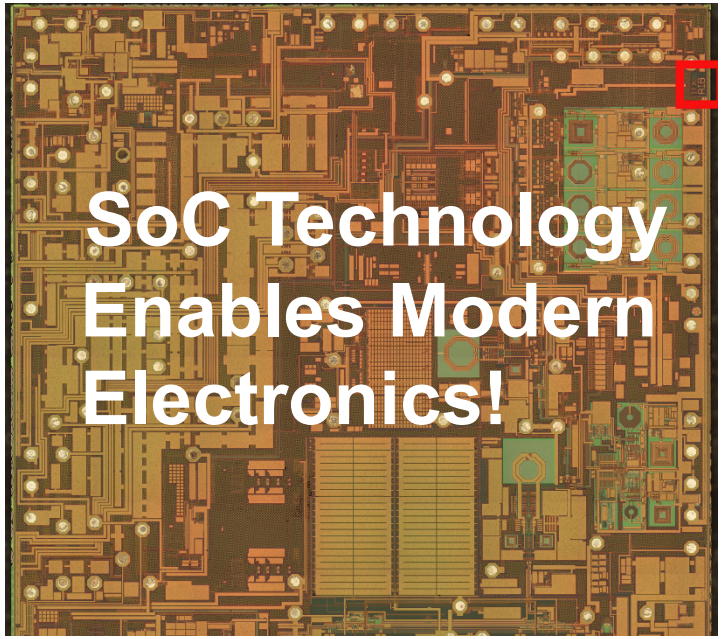

Leveraging Smart Phone Technology

Imagine what this could do for the size & weight of instrument electronics!

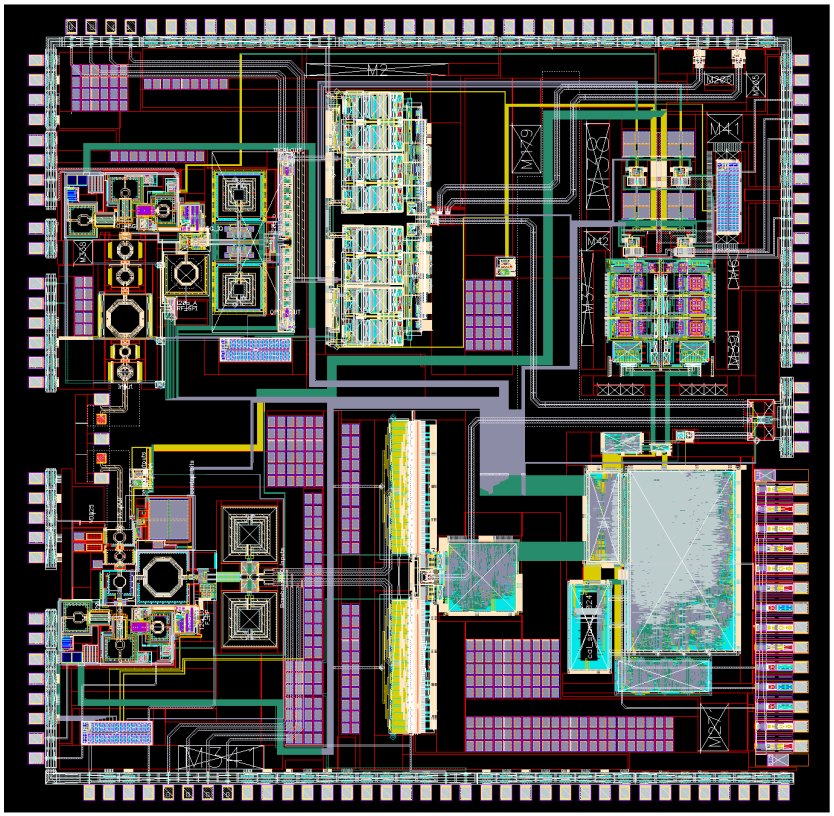

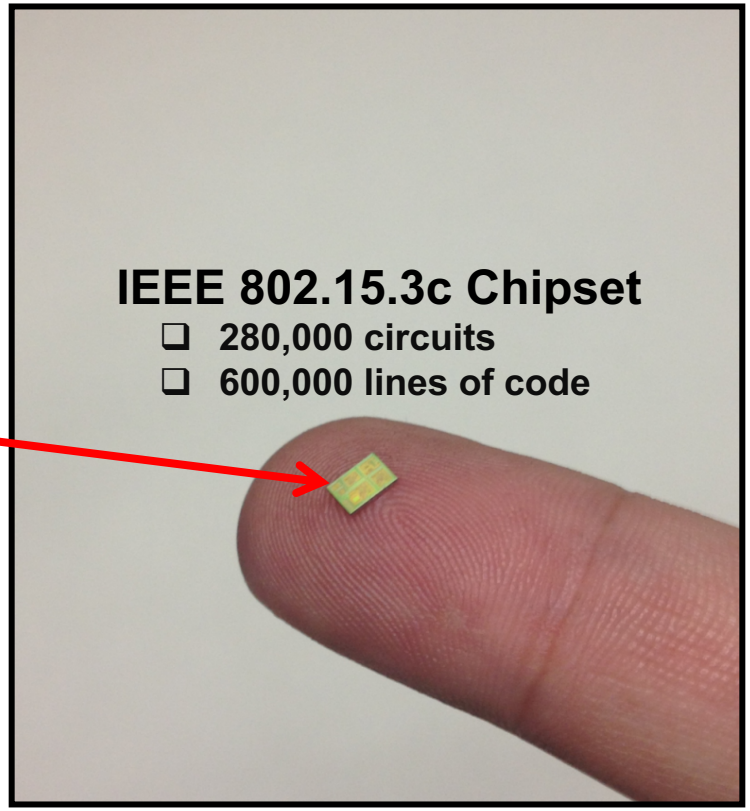

100 GHz SoC Based Synthesizer Module

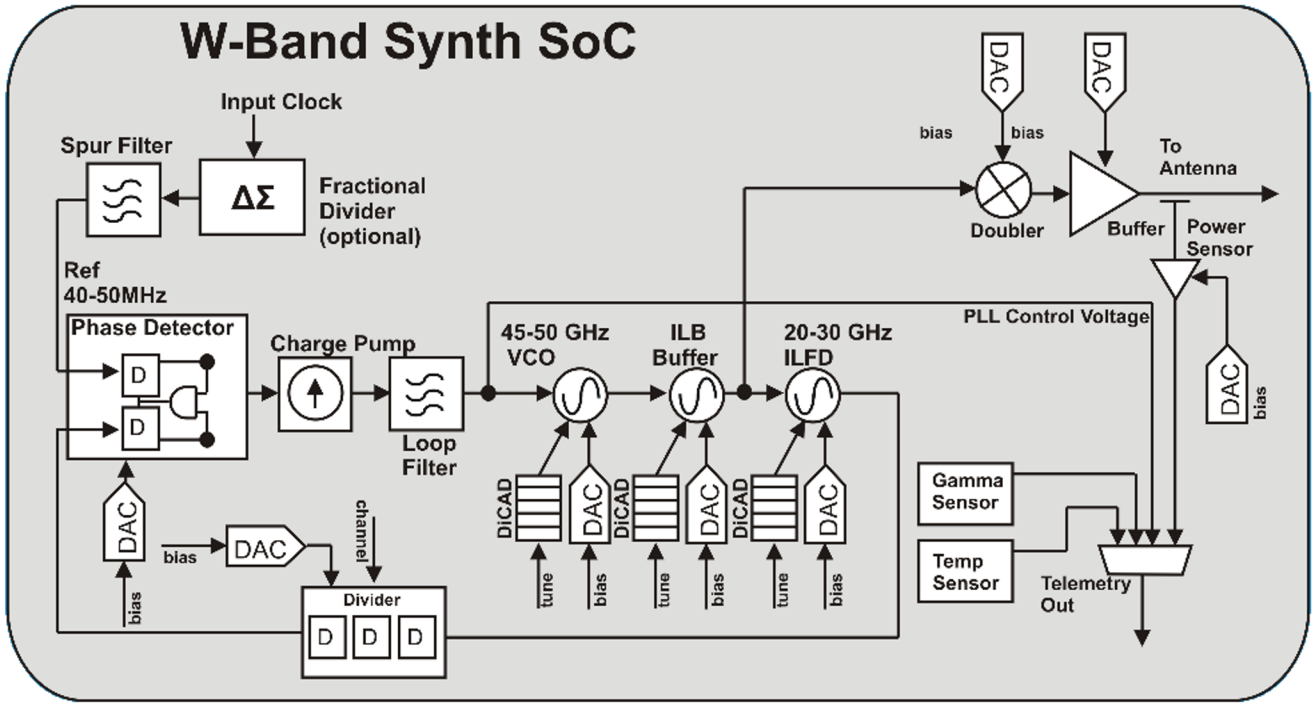

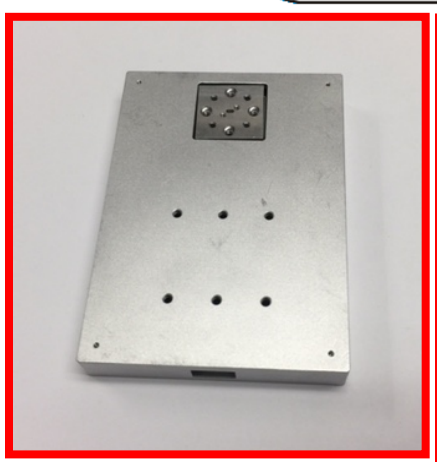

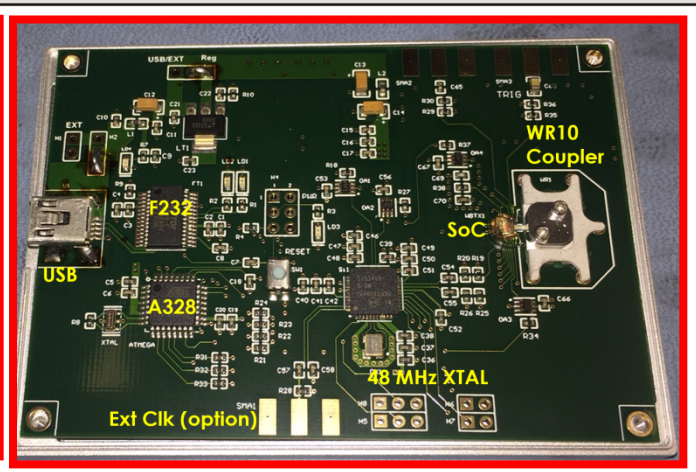

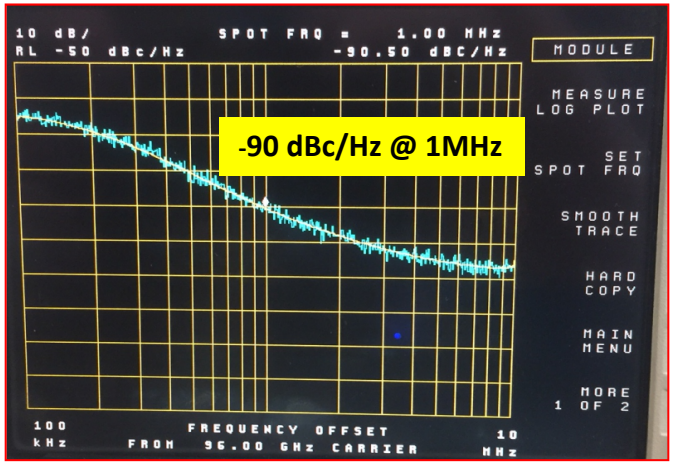

Ref: A. Tang, T. Reck, Y. Kim, G. Virbila, G. Chattopadhyay, and M.-C. Frank Chang, "A 65nm CMOS 88-105 GHz DDFS-Based Fractional Synthesizer for High Resolution Planetary Exploration Spectroscopy," *IEEE MTT-S International Microwave Symposium Digest*, San Francisco, CA, USA, May 2016.

3 GHz Bandwidth SoC Backend Spectrometer

Spectrometer SVII Module

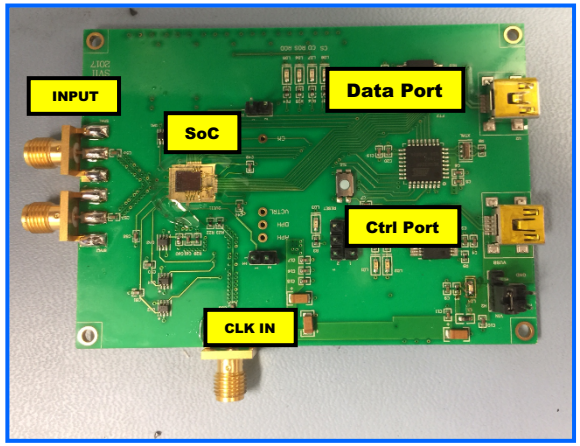

System-on-Chip

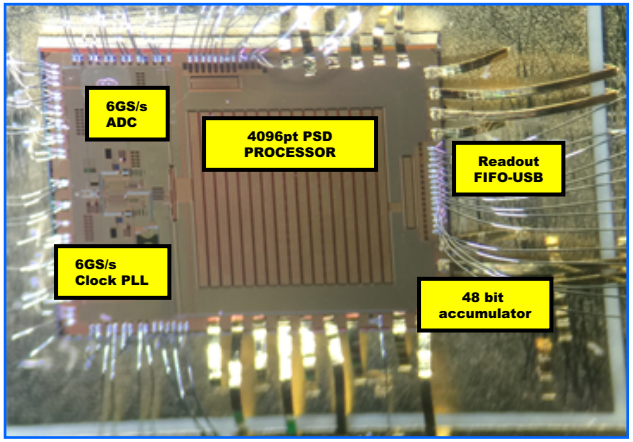

Electrical Parameters

Parameter	Minimum	Typical	Maximum	Unit
Clock Frequency (Han enabled)	1	-	6000	MHz
Clock Frequency (Han disabled)	1	6000	6000	MHz
Aliasable Bandwidth	-	-	9000	MHz
Interleaving Factor	-	2	-	X
Physical Number of Bits	-	3	-	bit
Signal to Quantization Noise Ratio	14.2	16.8	19	dB
Number of FFT Channels	-	4096	-	#
Windowing Type	-	Selectable Han or Rectange	-	-
Input Format	-	Differential	-	

Ref: A. Tang, T. Reck, and G. Chattopadhyay, "CMOS System-on-Chip Techniques in Millimeter-Wave/THz Instruments and Communications for Planetary Explorations," *IEEE Communications Magazine*, vol. 54, no. 10, pp. 176-182, October 2016.

Silicon Micromachined Based Packaging

Silicon Micromachining

- Etch silicon wafer with plasma using a photolithographic pattern

Advantages:

- Potential for lower cost because of batch-processed device fabrication, yielding better uniformity too.
- Lithographically precise feature definitions
- Integration of bias & IF lines on silicon itself. Future potential for integrated CMOS silicon devices.
- Potential for higher density 2D transceiver arrays.

Disadvantages:

- **Challenge of wafer alignment.**

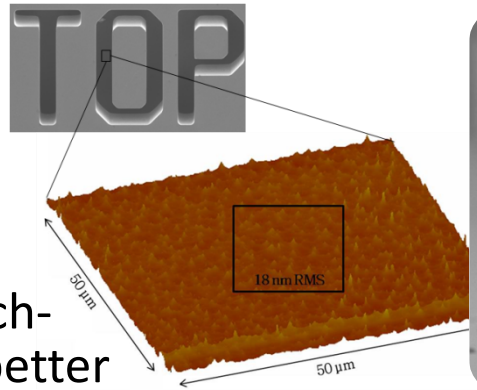

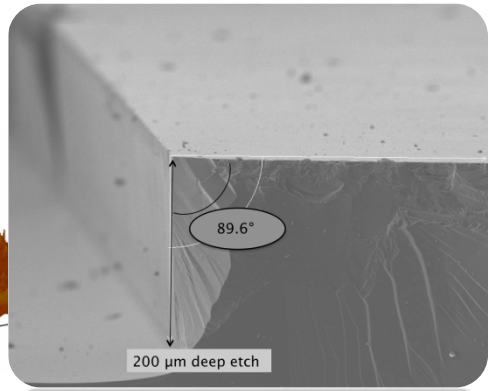

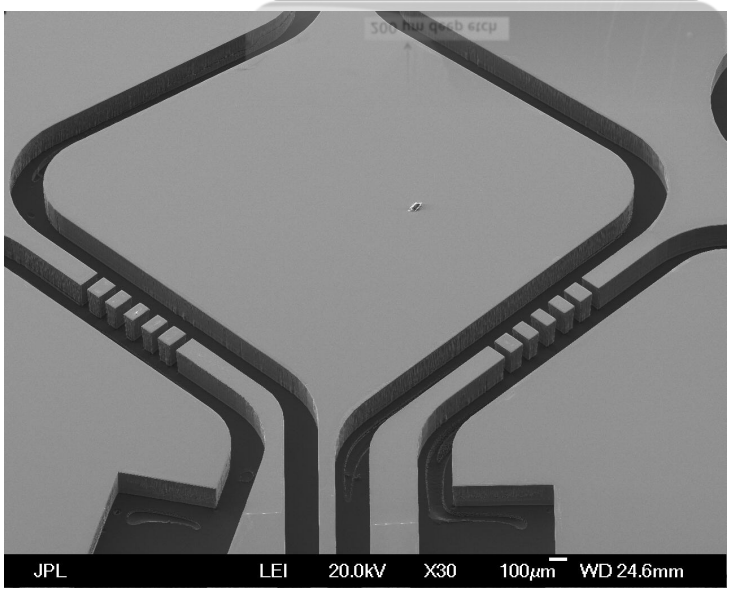

Ref: C. Jung-Kubiak, T. Reck, J. V. Siles, R. Lin, C. Lee, J. Gill, K. Cooper, I. Mehdi, and G. Chattopadhyay, "A Multi-Step DRIE Process for Complex Terahertz Waveguide Components," *IEEE Transactions on Terahertz Science and Technology*, vol. 6, no. 5, pp. 690-695, September 2016.

Deep Reactive Ion Etching (DRIE)

- Use of an optimized Bosch process to etch silicon: alternate exposures of SF_6 and C_4F_8 plasmas. Optimization of power, gas ratios, and timing for each step.
- Use SiO_2 as hard mask (selectivity of 150:1) to etch Silicon

Oxide pre-etch process

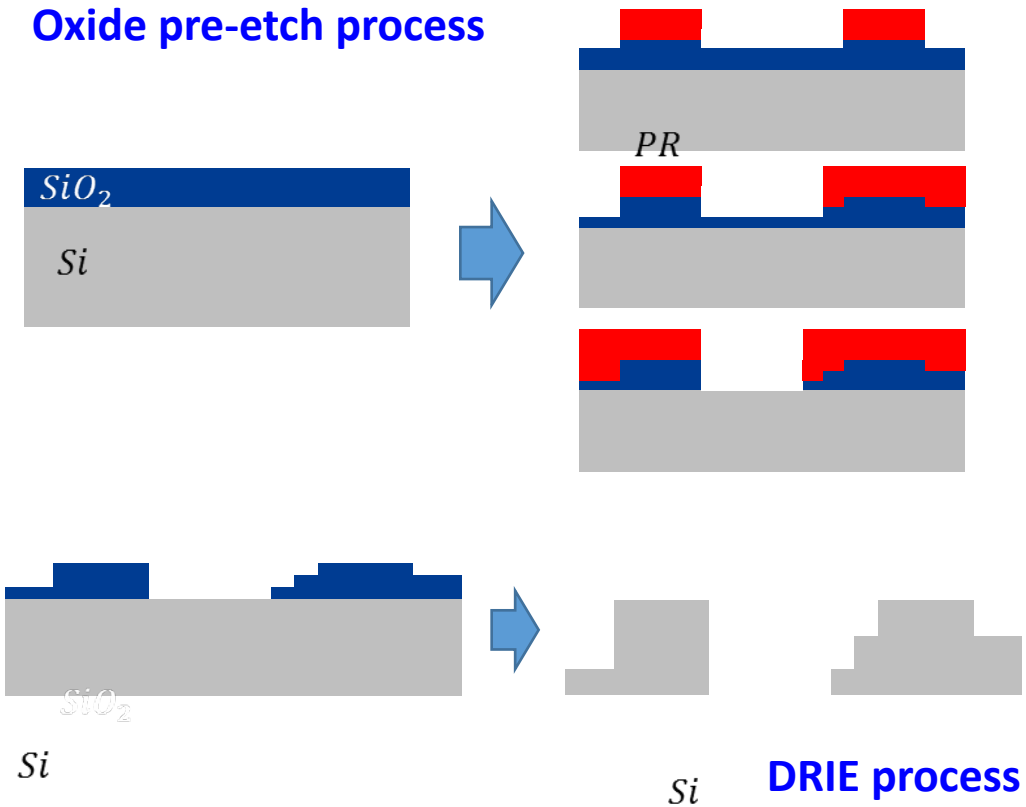

- Use of photoresist to do SiO2 patterning.
- Etching of differential patterns to ensure precise control of the final target.
- Etching using Inductive Coupled Plasma (ICP) process (etch rate of ~ 70 nm/min).
- DRIE process to etch the silicon, with oxide as the only mask. NO photoresist.

Ref: C. Jung-Kubiak, T. Reck, J. V. Siles, R. Lin, C. Lee, J. Gill, K. Cooper, I. Mehdi, and G. Chattopadhyay, "A Multi-Step DRIE Process for Complex Terahertz Waveguide Components," *IEEE Transactions on Terahertz Science and Technology*, vol. 6, no. 5, pp. 690-695, September 2016.

Silicon Micromachined Components

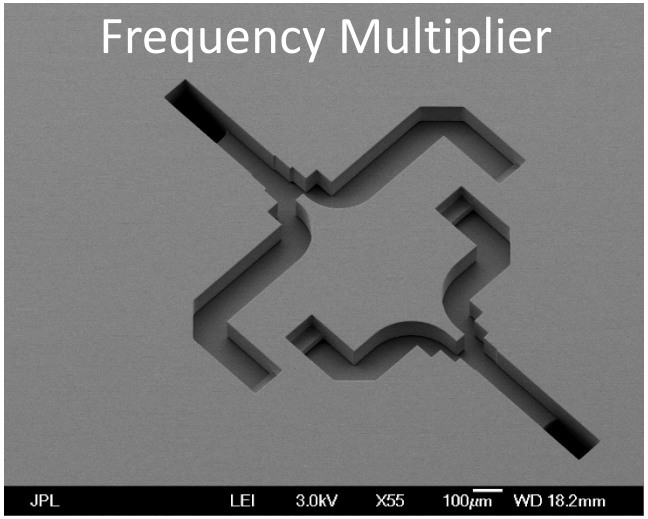

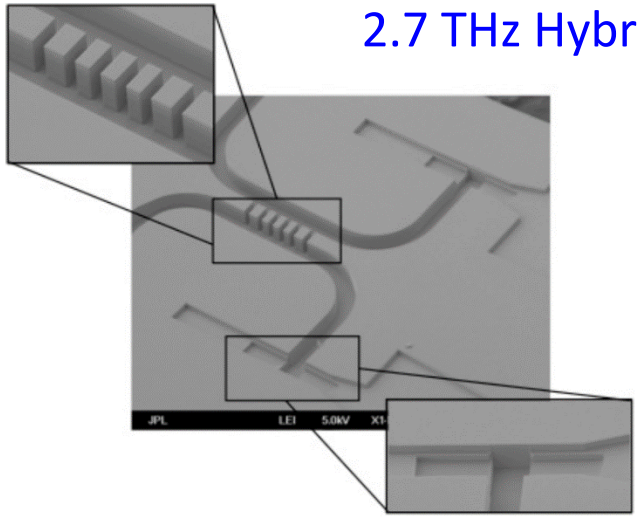

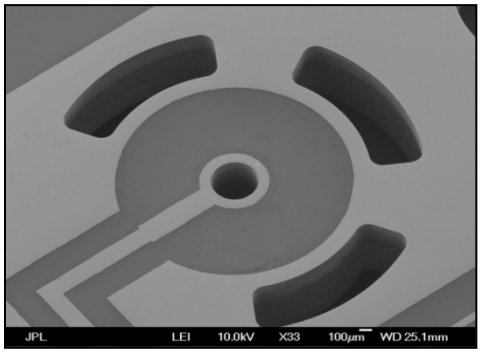

Co-axial IF output

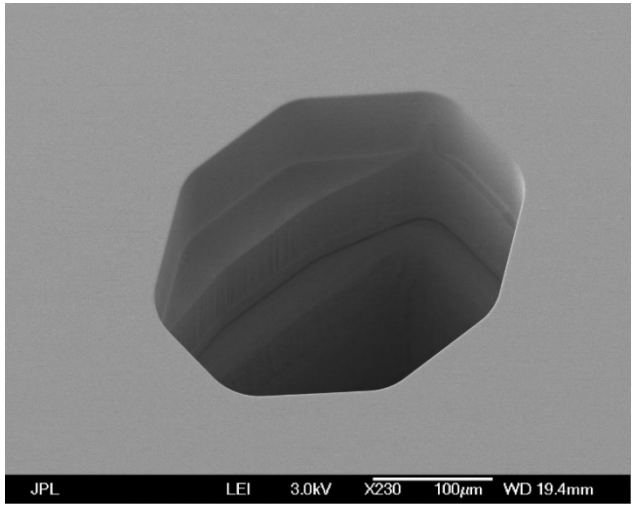

Transition

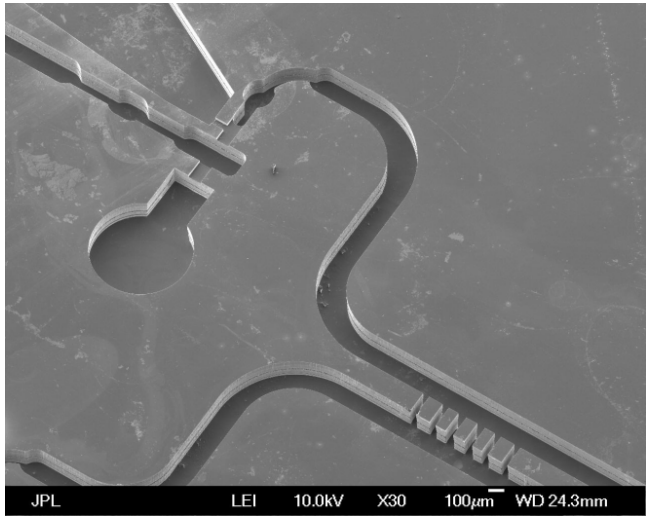

Complete Receiver

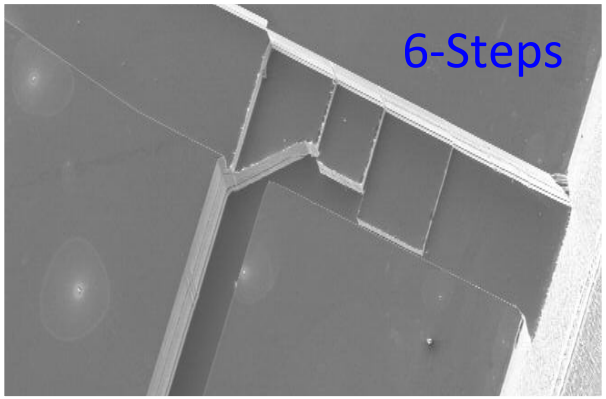

Ortho-Mode Transducer

Ref: G. Chattopadhyay, T. Reck, C. Lee, and C. Jung-Kubiak, “Micromachined Packaging for Terahertz Systems,” *Proceedings of the IEEE*, vol. 105, no. 6, pp. 1139-1150, June 2017.

Silicon Micromachined Front-End

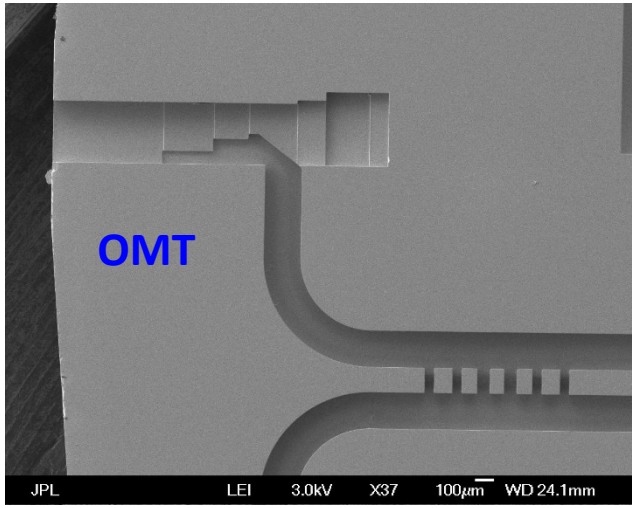

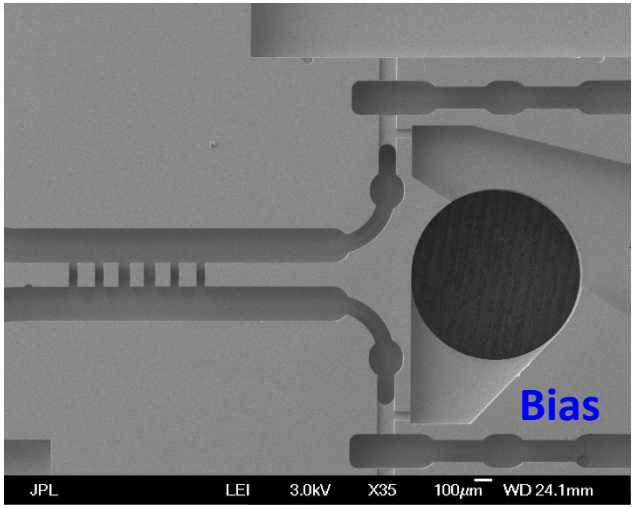

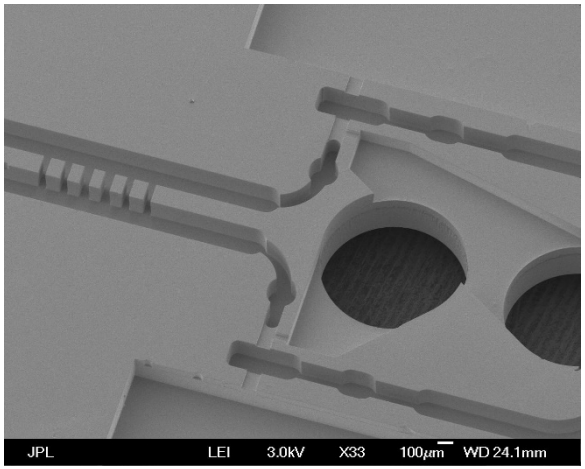

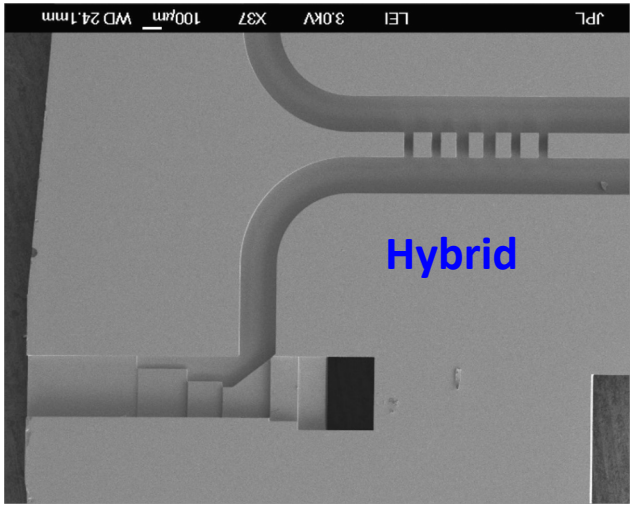

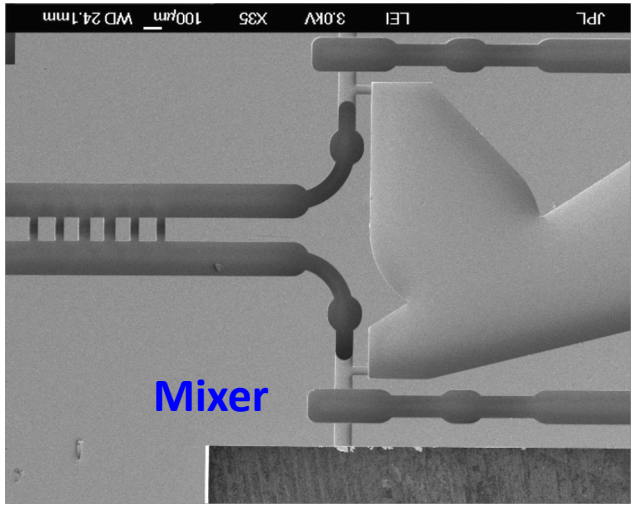

Different silicon micromachined layers before gold deposition.

Ref: G. Chattopadhyay, T. Reck, C. Lee, and C. Jung-Kubiak, "Micromachined Packaging for Terahertz Systems," *Proceedings of the IEEE*, vol. 105, no. 6, pp. 1139-1150, June 2017.

Wafer Alignment

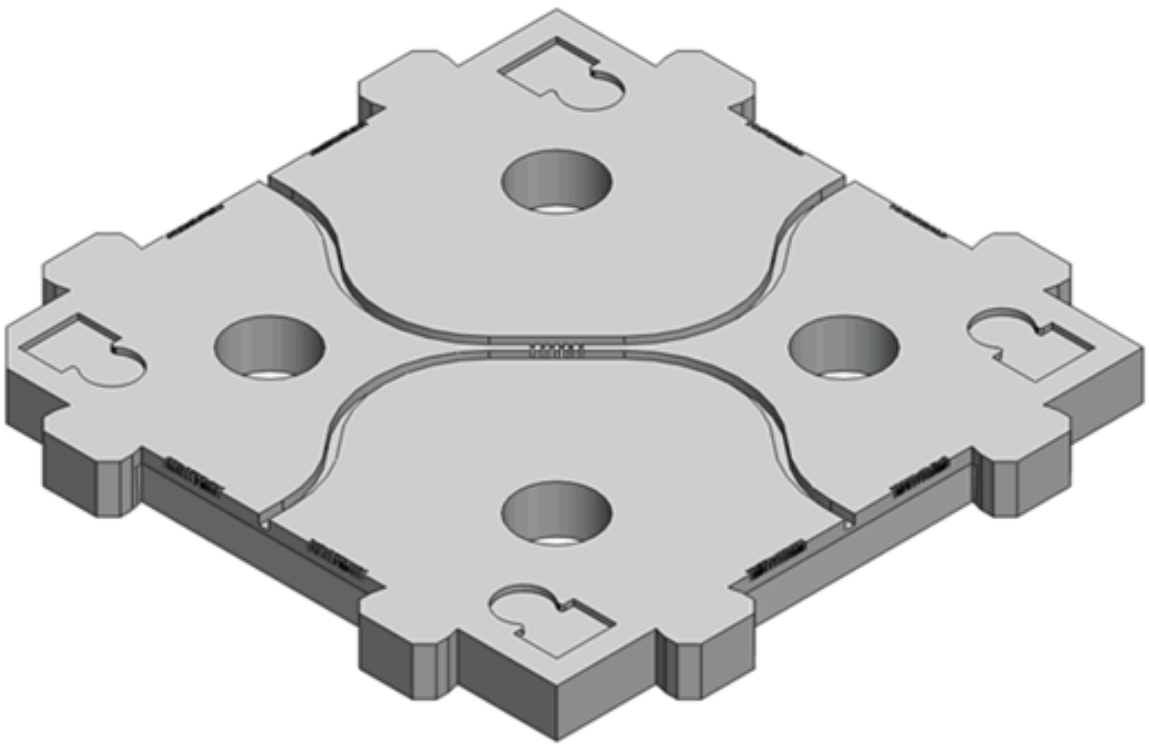

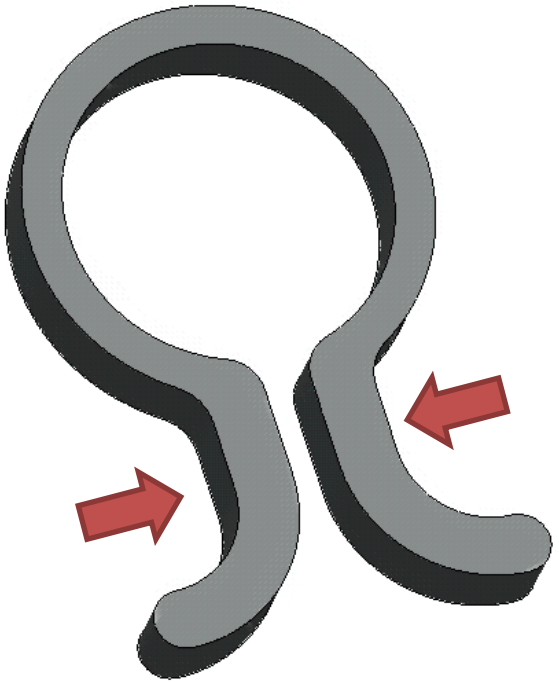

Ref: G. Chattopadhyay, T. Reck, C. Lee, and C. Jung-Kubiak, “Micromachined Packaging for Terahertz Systems,” *Proceedings of the IEEE*, vol. 105, no. 6, pp. 1139-1150, June 2017.

Wafer Alignment

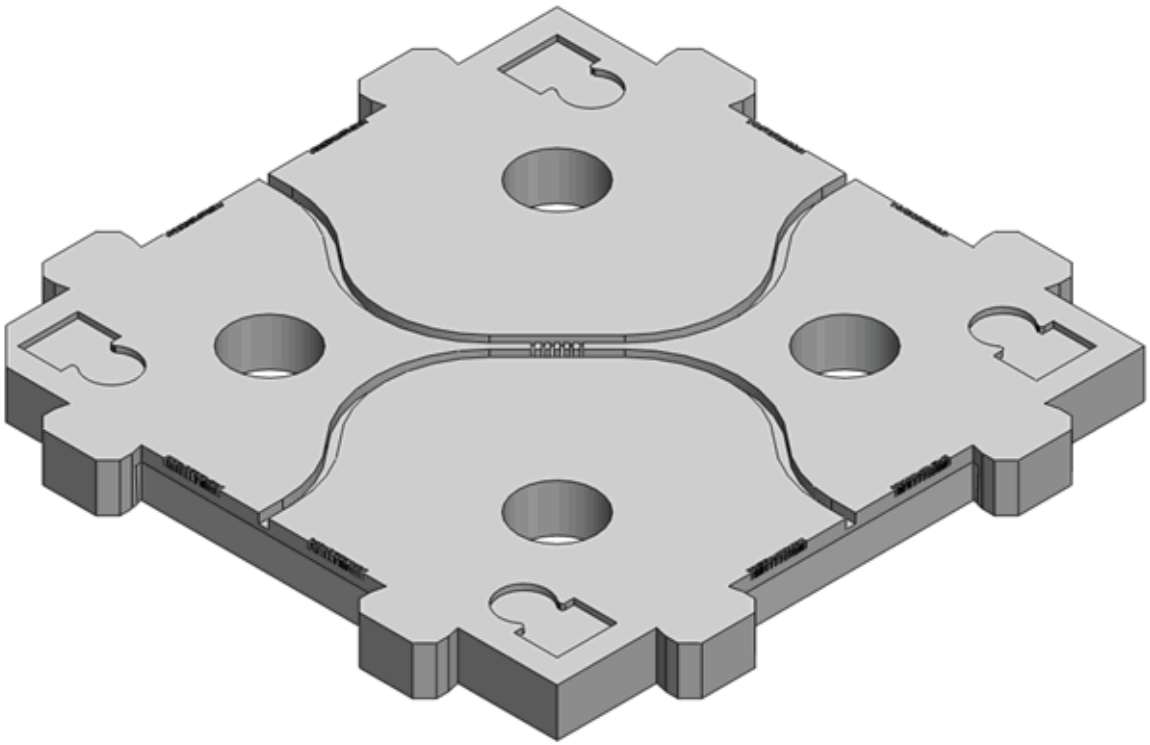

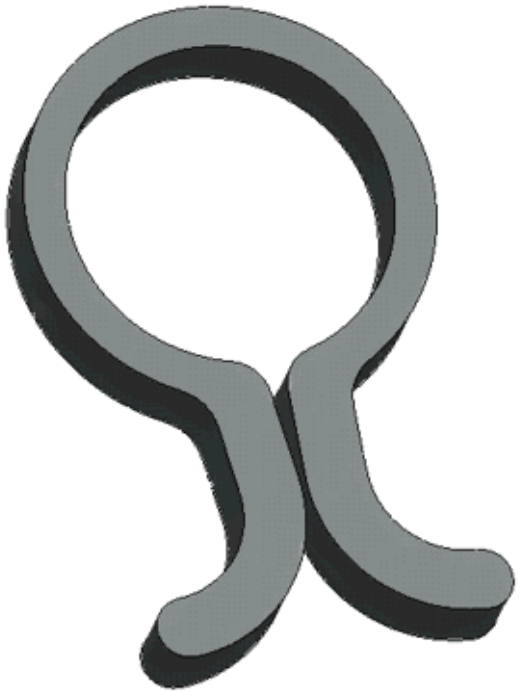

Ref: G. Chattopadhyay, T. Reck, C. Lee, and C. Jung-Kubiak, “Micromachined Packaging for Terahertz Systems,” *Proceedings of the IEEE*, vol. 105, no. 6, pp. 1139-1150, June 2017.

Wafer Alignment

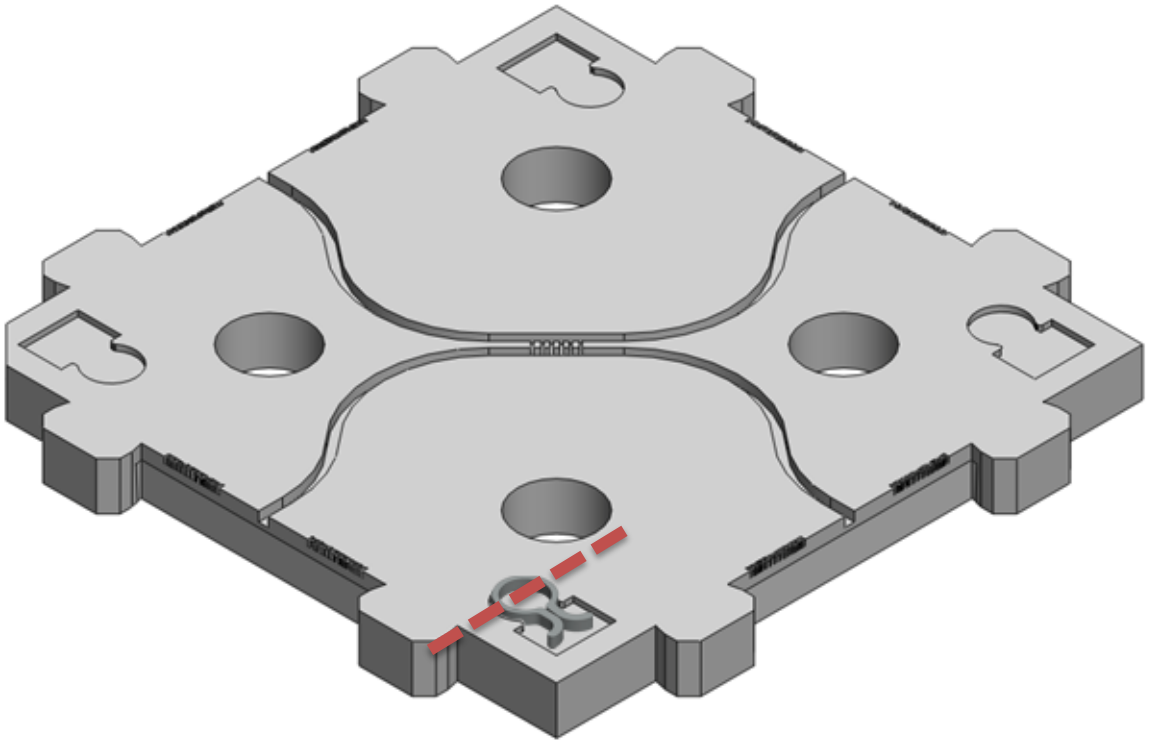

Ref: G. Chattopadhyay, T. Reck, C. Lee, and C. Jung-Kubiak, “Micromachined Packaging for Terahertz Systems,” *Proceedings of the IEEE*, vol. 105, no. 6, pp. 1139-1150, June 2017.

Wafer Alignment

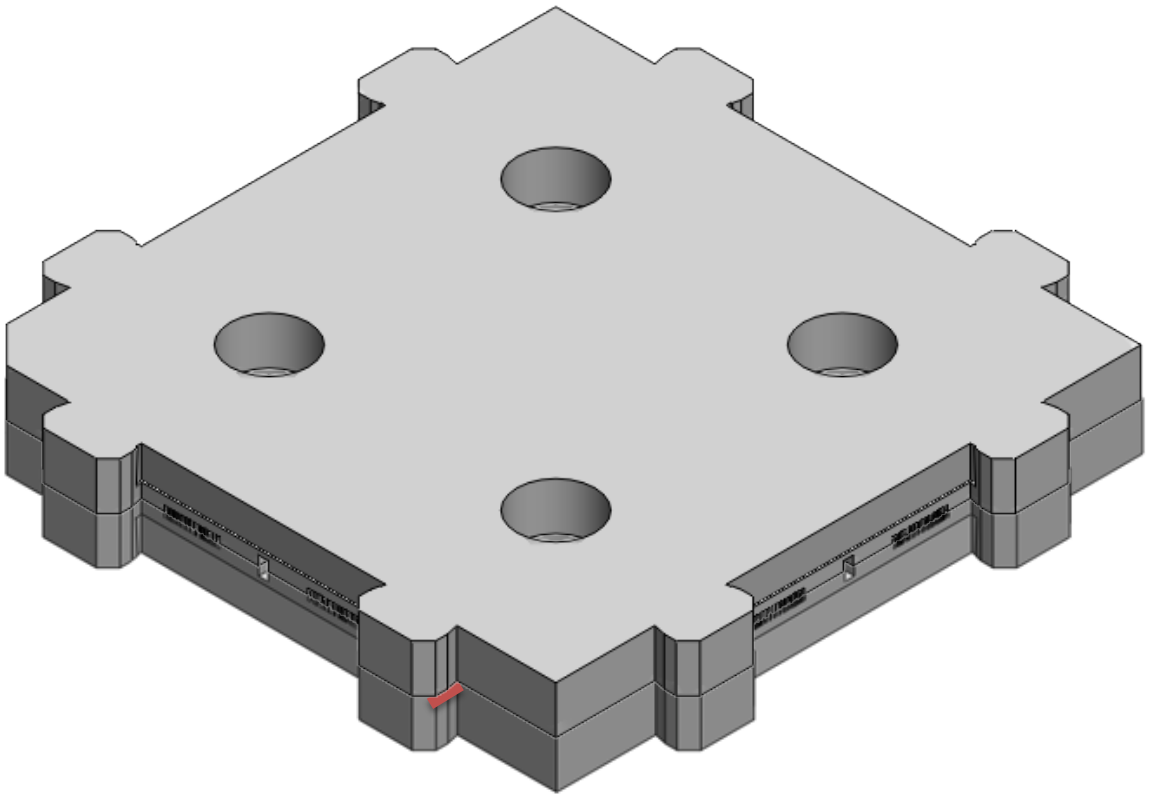

Ref: G. Chattopadhyay, T. Reck, C. Lee, and C. Jung-Kubiak, “Micromachined Packaging for Terahertz Systems,” *Proceedings of the IEEE*, vol. 105, no. 6, pp. 1139-1150, June 2017.

Wafer Alignment

- **How do we align individual silicon wafers?**

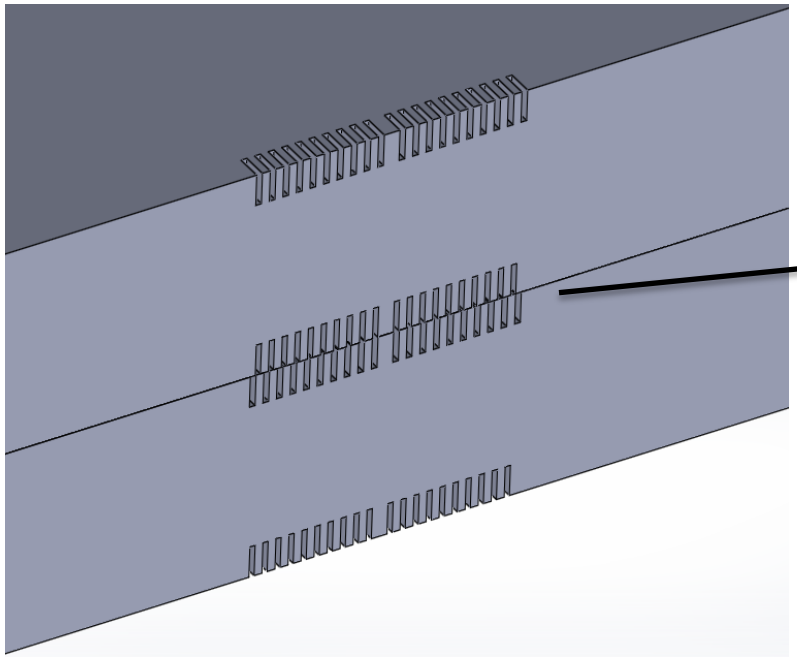

Axis misalignment 1um +- 1um

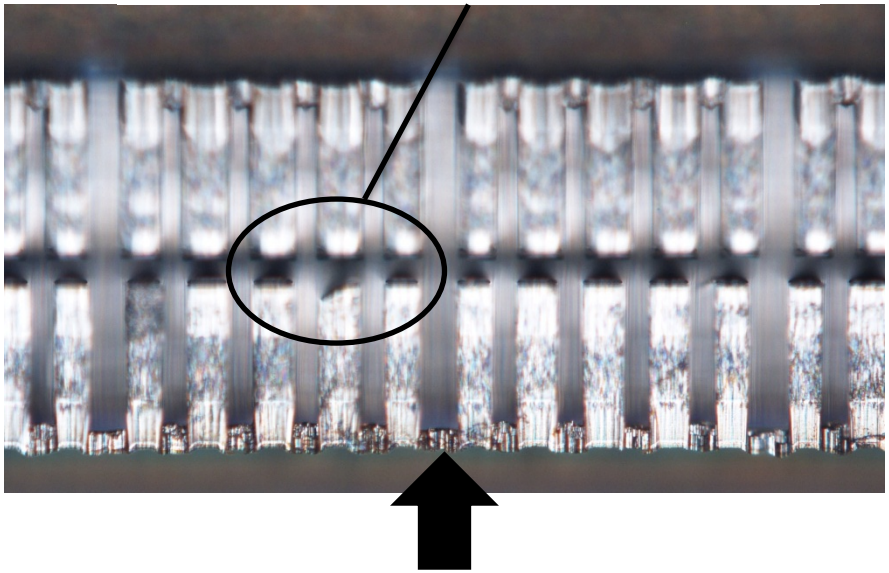

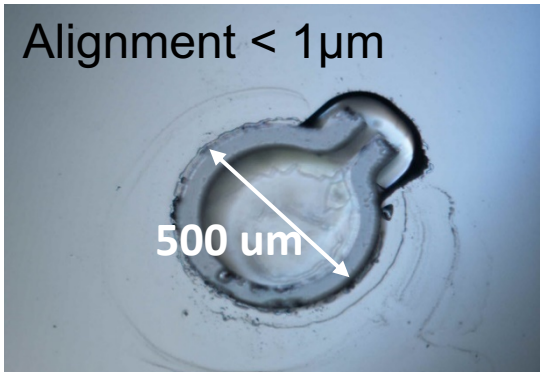

- **Enables characterization of alignment schemes**
- **Improves hand alignment**

Ref: G. Chattopadhyay, T. Reck, C. Lee, and C. Jung-Kubiak, "Micromachined Packaging for Terahertz Systems," *Proceedings of the IEEE*, vol. 105, no. 6, pp. 1139-1150, June 2017.

Receiver Architecture for 1.9 THz Array

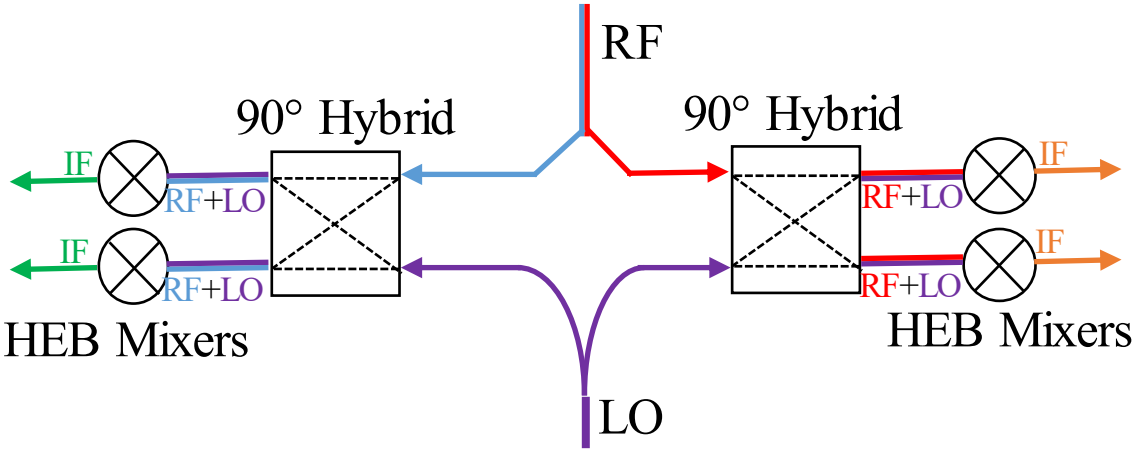

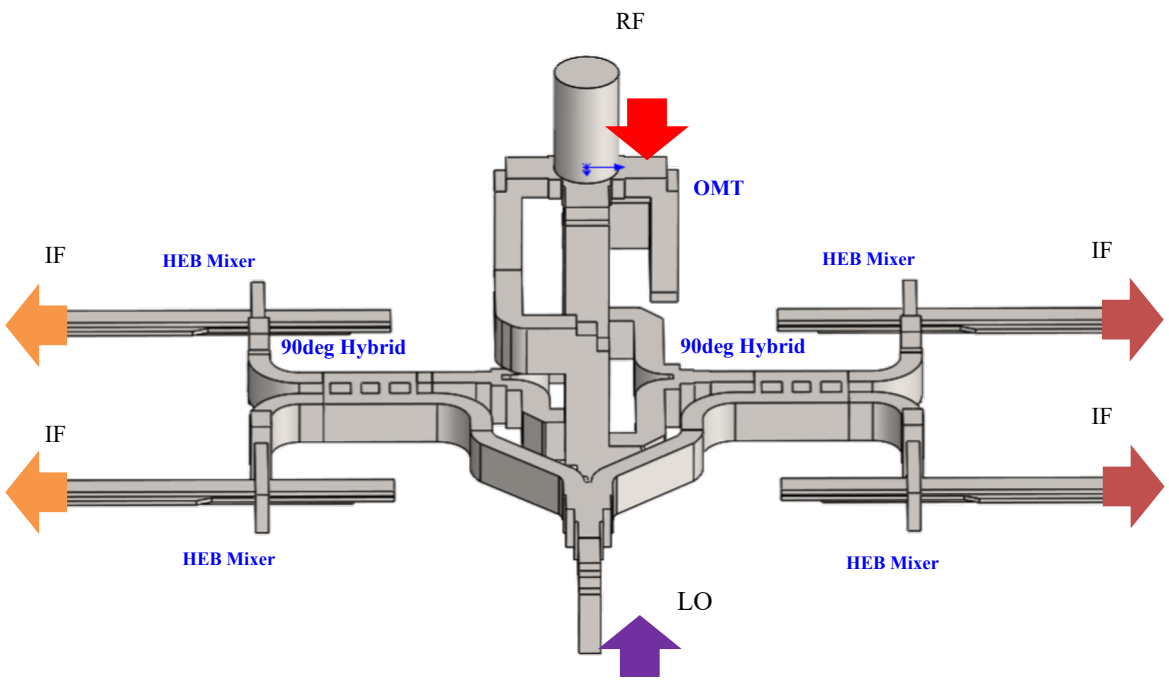

Ref: M. Alonso-delPino, T. Reck, C. Lee, C. Jung-Kubiak, N. Llbomart, I. Mehdi, and G. Chattopadhyay, "Micro-Lens Antenna Integrated in a Silicon Micromachined Receiver at 1.9 THz," *Proc. 10th European Conference on Antennas and Propagation (EuCAP)*, Davos, Switzerland, April 2016.

Ortho Mode Transducer at 1.9 THz

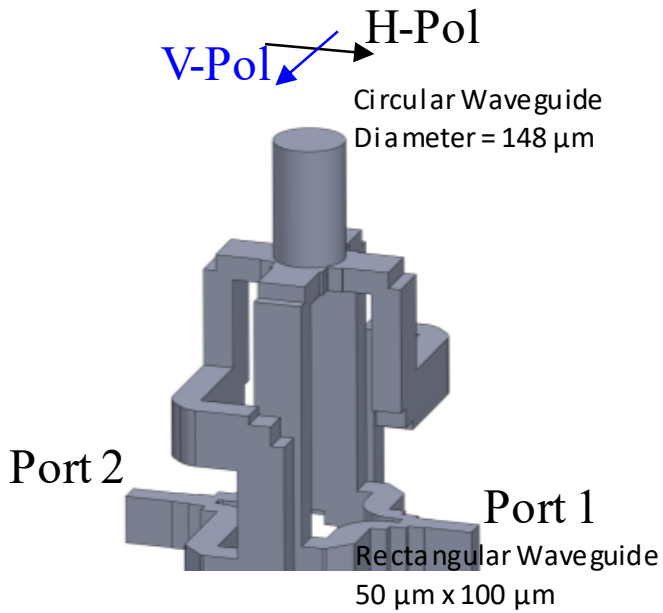

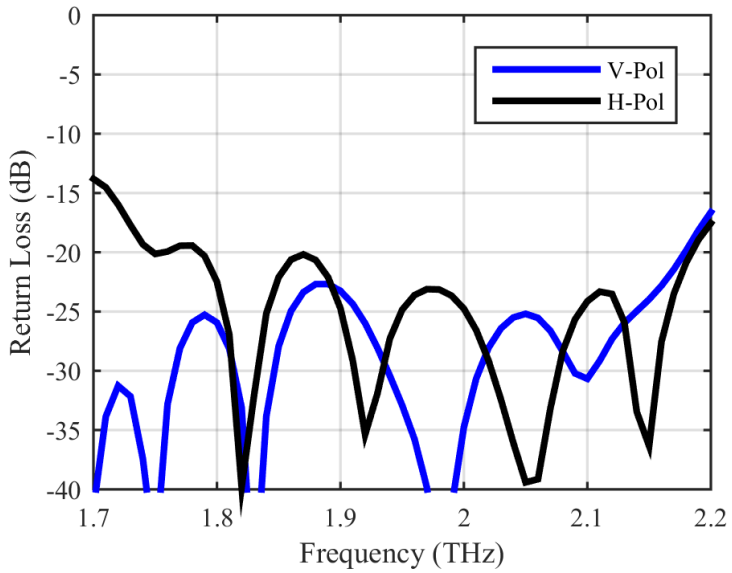

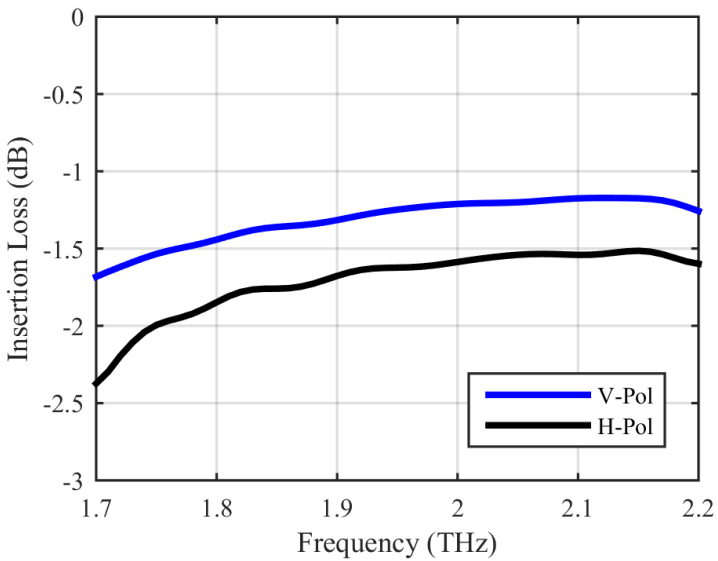

90-Degrees Hybrid Coupler at 1.9 THz

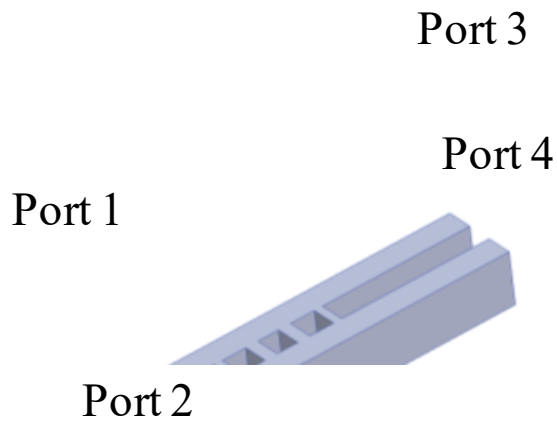

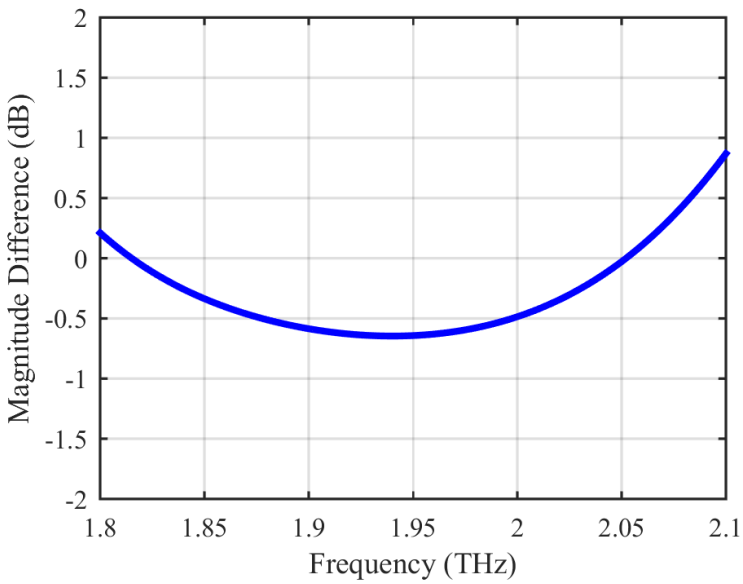

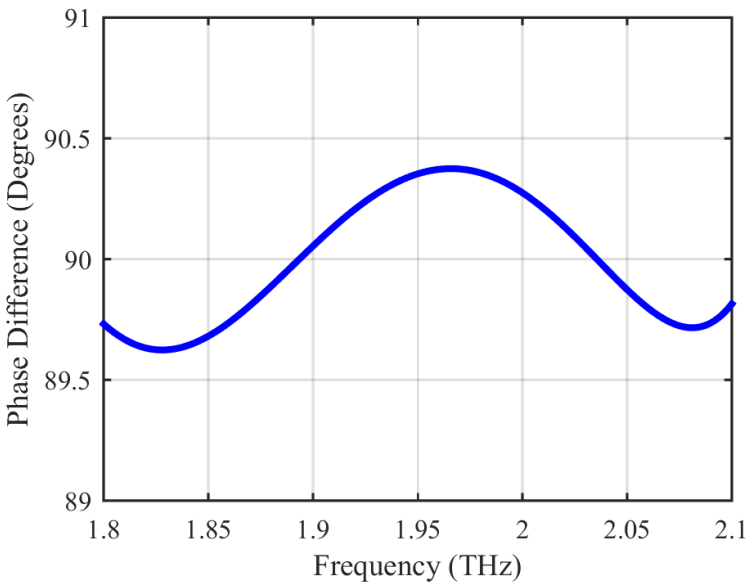

HEB Mixers at 1.9 THz

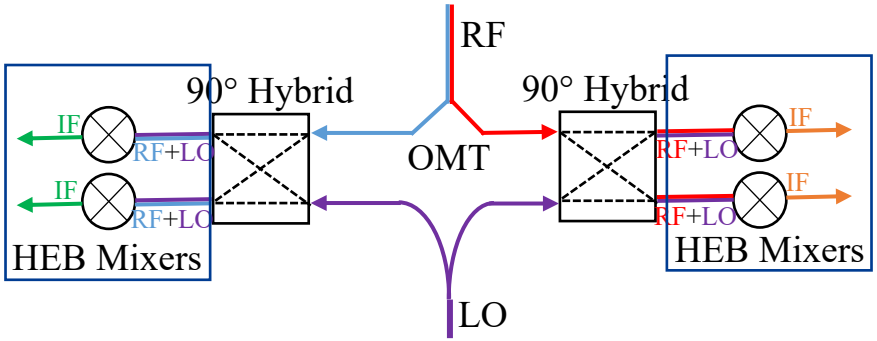

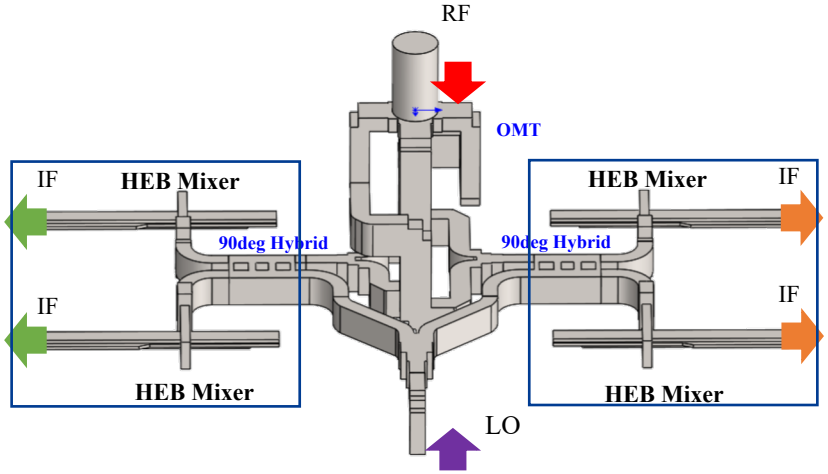

HEB Mixer

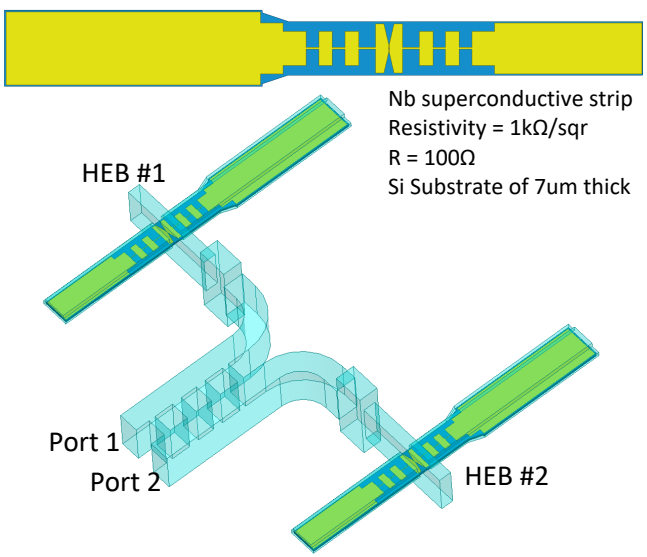

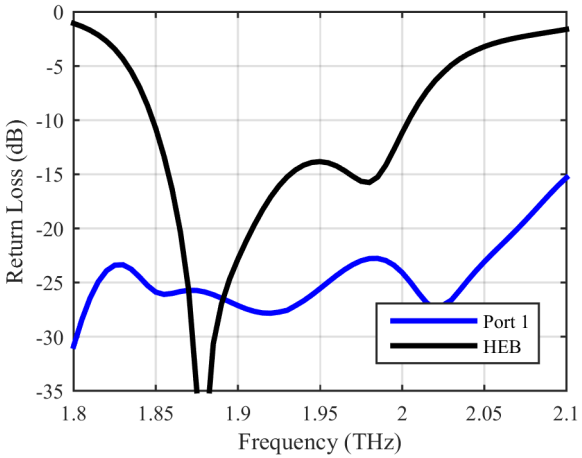

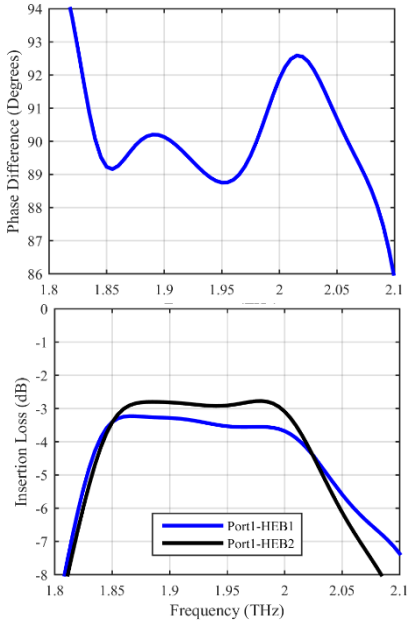

Receiver Integration

- **Waveguide structures are fabricated on silicon wafers and coated with gold.**
- **They are vertically stacked**

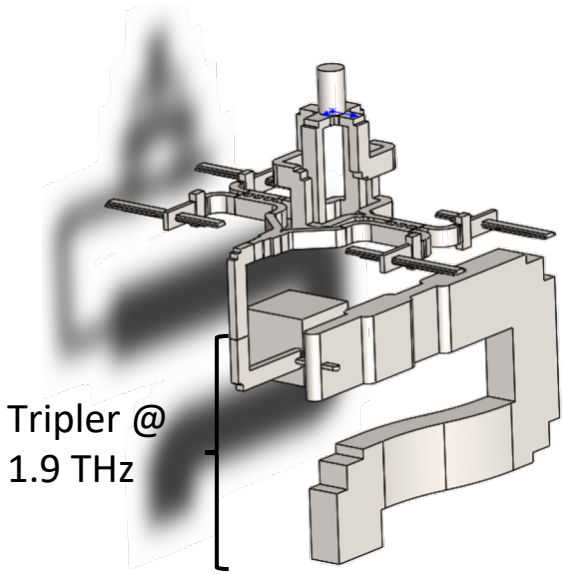

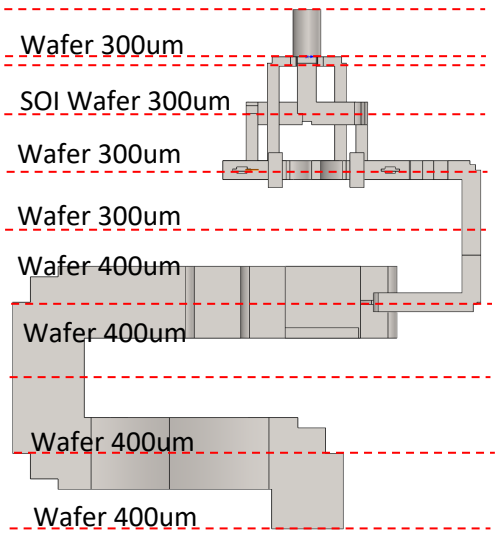

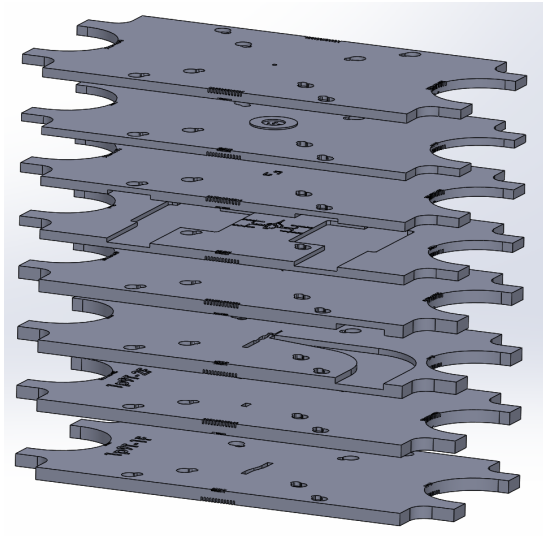

Ref: M. Alonso-delPino, T. Reck, C. Lee, C. Jung-Kubiak, N. Llbomart, I. Mehdi, and G. Chattopadhyay, "Micro-Lens Antenna Integrated in a Silicon Micromachined Receiver at 1.9 THz," *Proc. 10th European Conference on Antennas and Propagation (EuCAP)*, Davos, Switzerland, April 2016.

System Integration

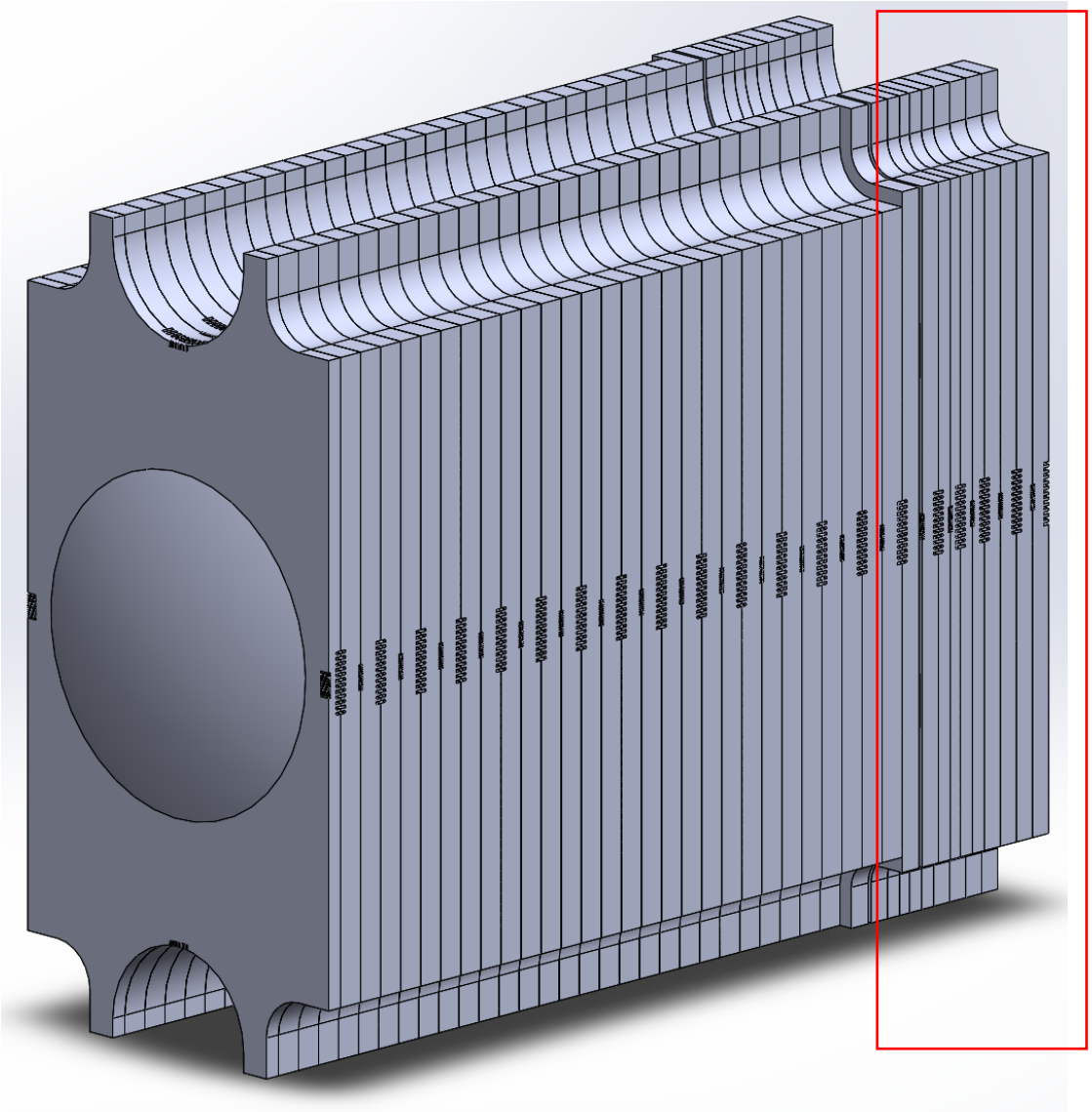

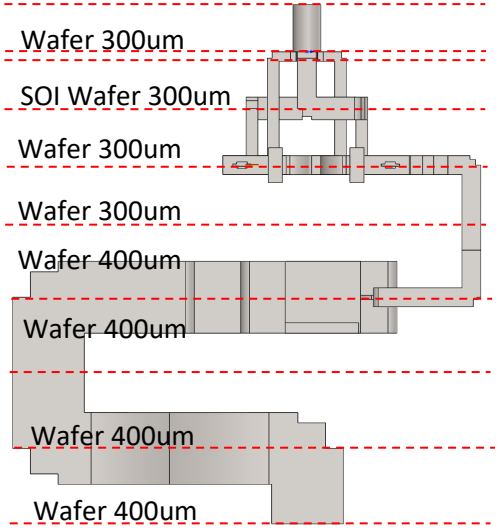

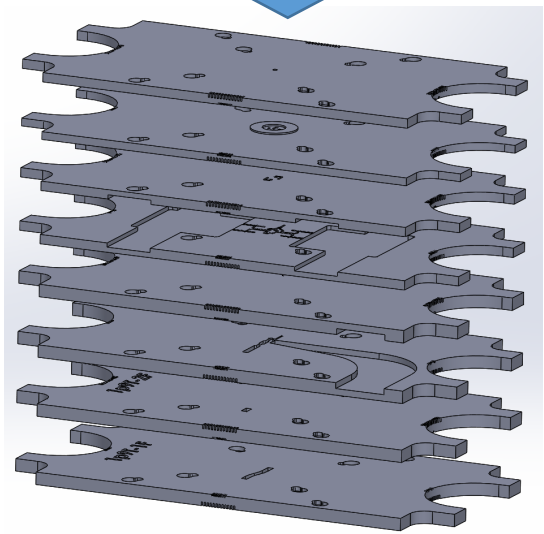

Fabricated Components

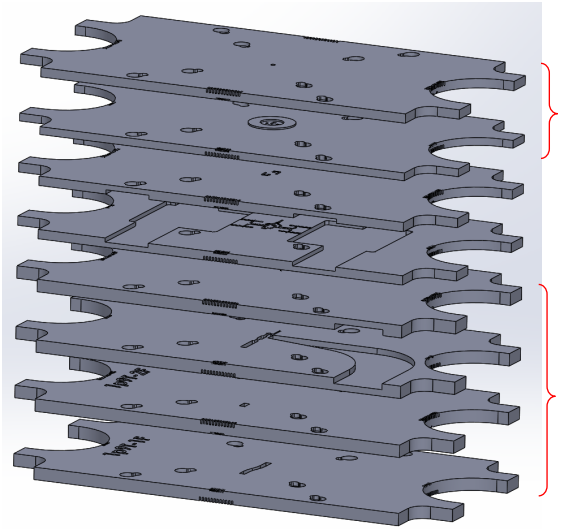

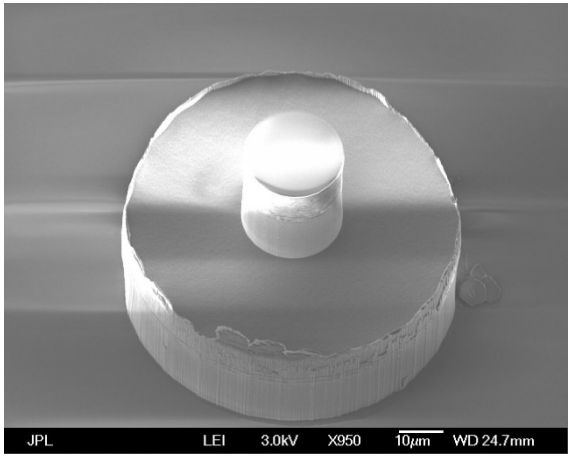

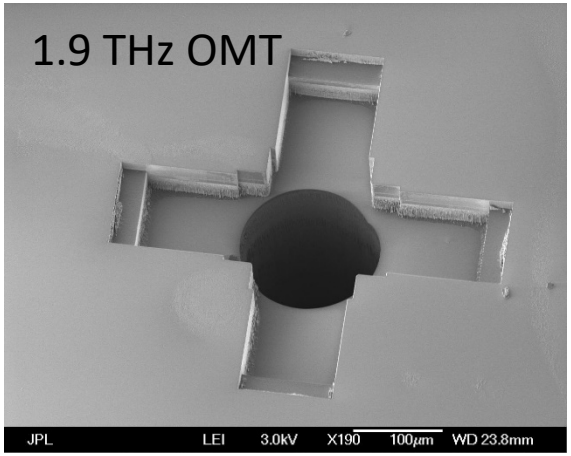

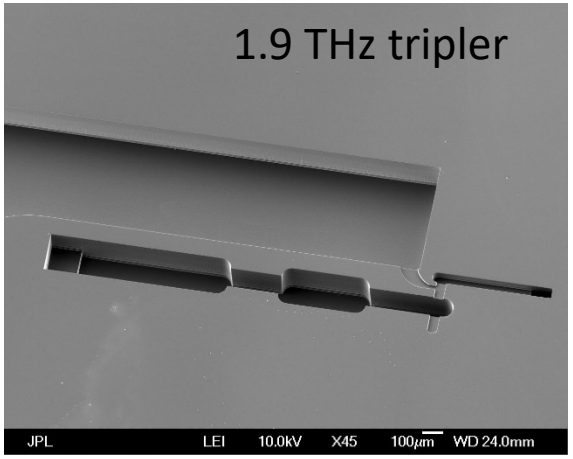

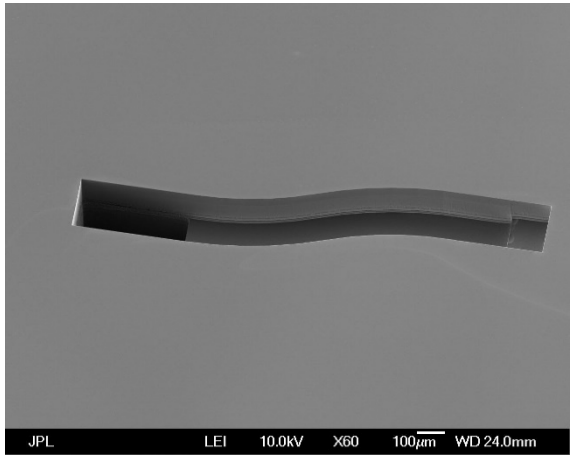

Fabricated Components

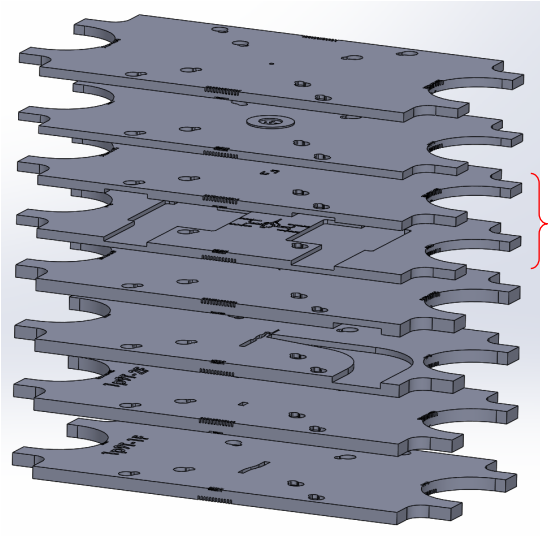

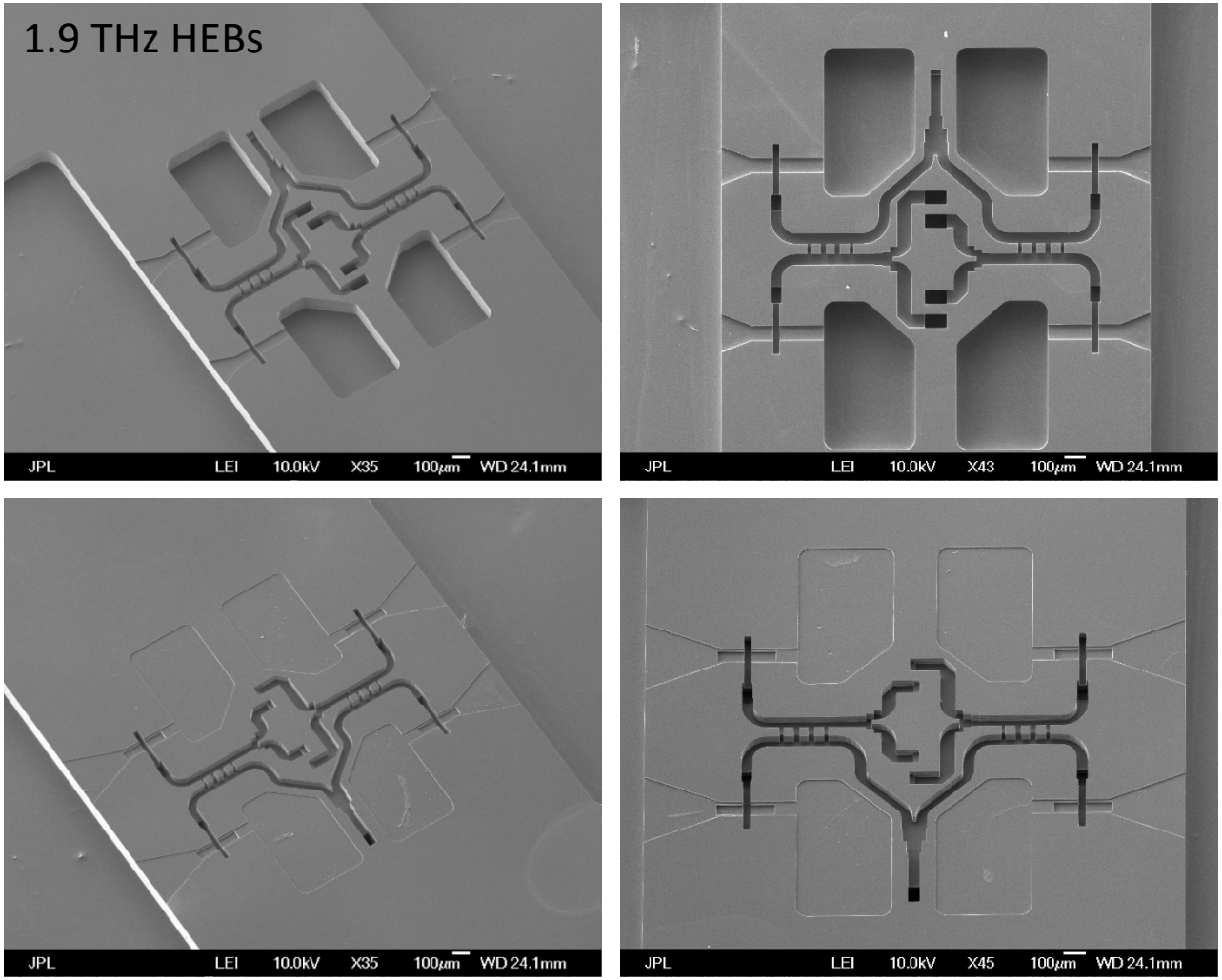

Ref: M. Alonso-delPino, T. Reck, C. Lee, C. Jung-Kubiak, N. Llbomart, I. Mehdi, and G. Chattopadhyay, "Micro-Lens Antenna Integrated in a Silicon Micromachined Receiver at 1.9 THz," *Proc. 10th European Conference on Antennas and Propagation (EuCAP)*, Davos, Switzerland, April 2016.

Local Oscillator Chain to Reach 1.9 THz

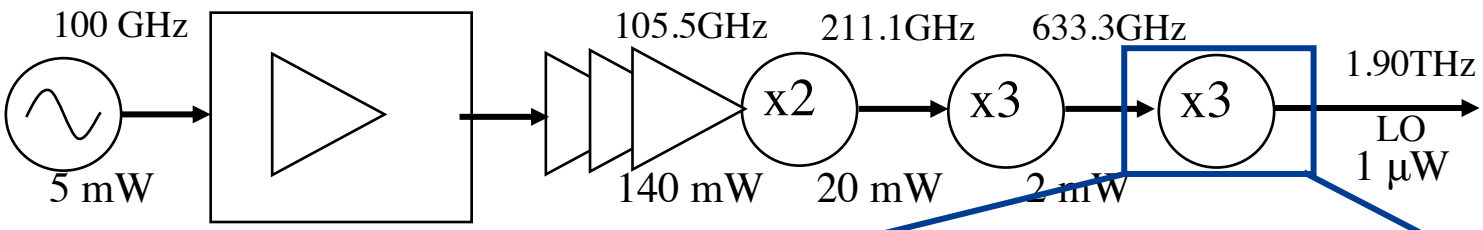

1.9 THz Tripler fabricated with Silicon Micromachining

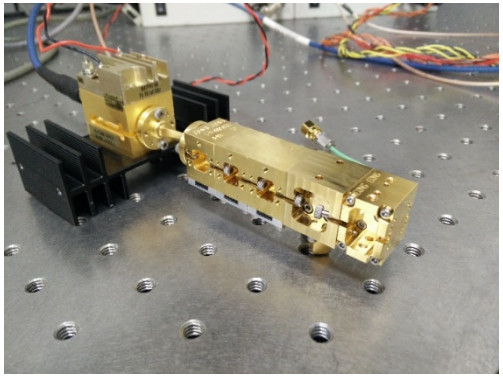

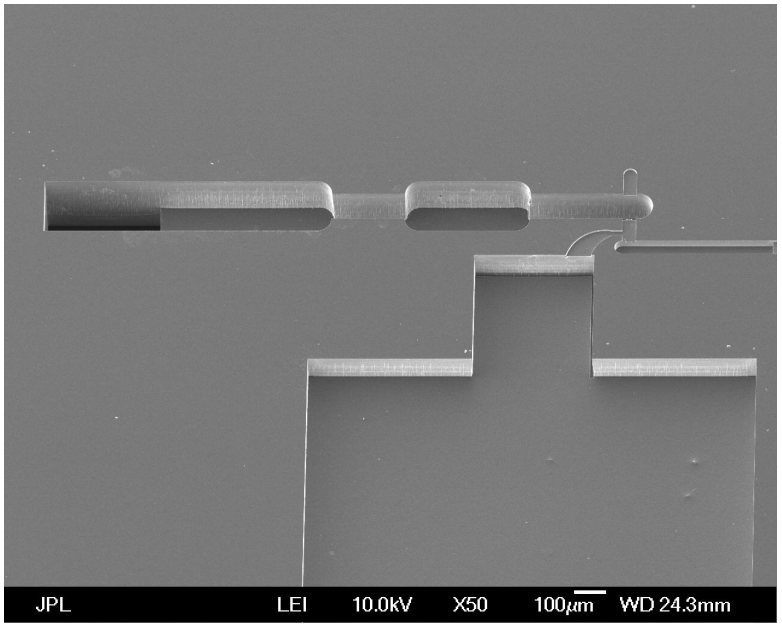

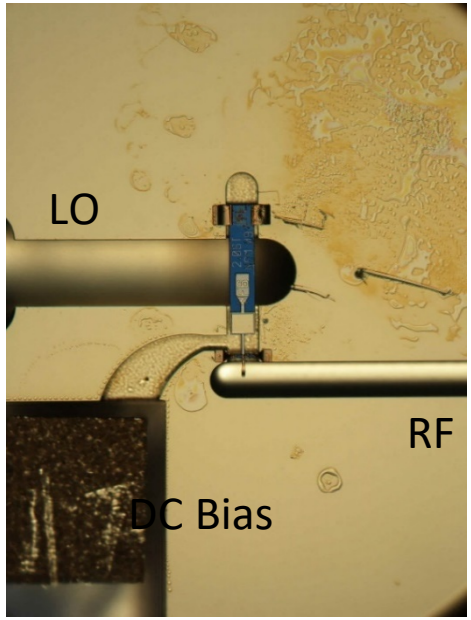

Terahertz Antennas

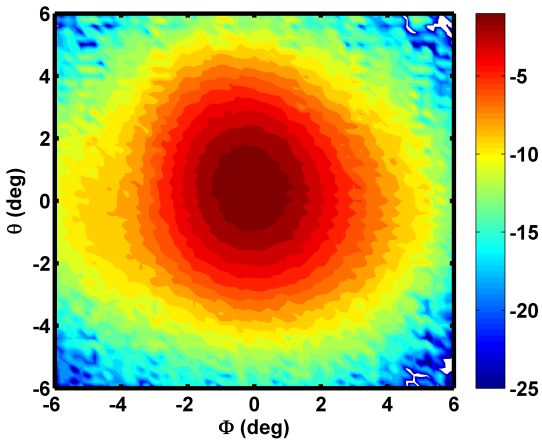

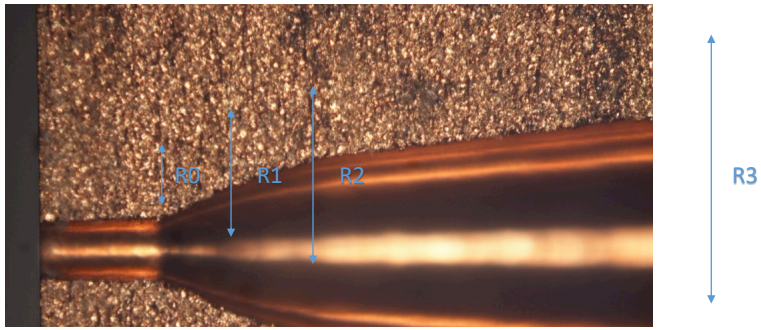

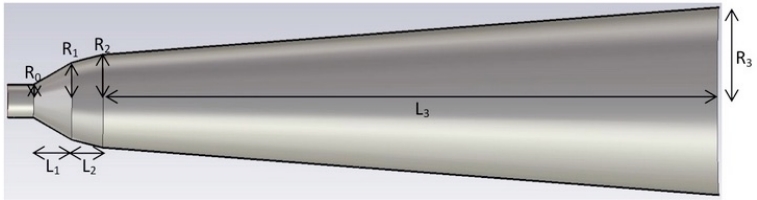

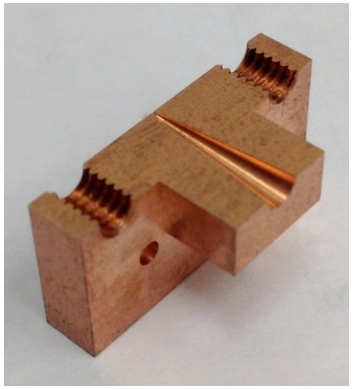

Parameters	Length
R0	0.074
R1	0.189
R2	0.261
R3	1.279
L1	0.237
L2	0.237
L3	8.976

Total length = 9.45mm.

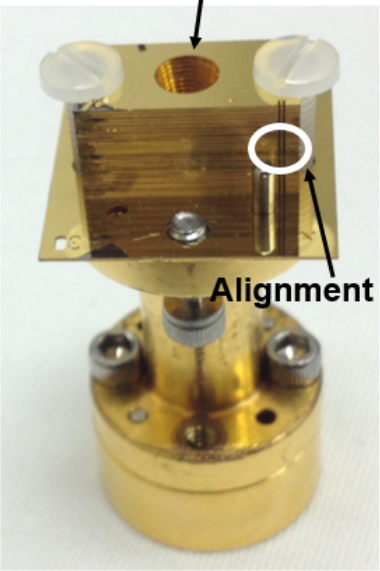

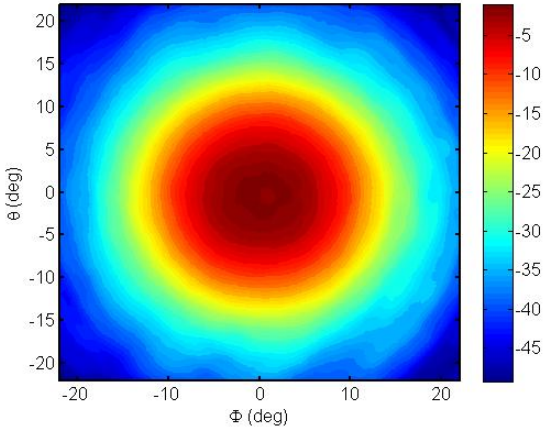

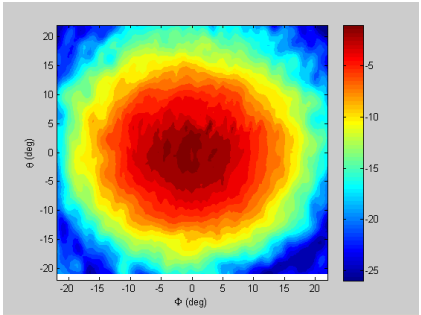

Terahertz Antennas

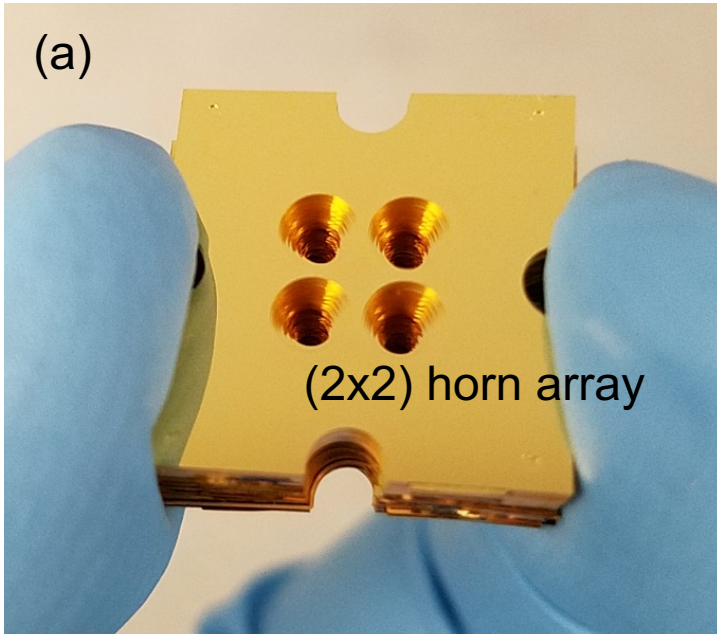

38 silicon layers stacked

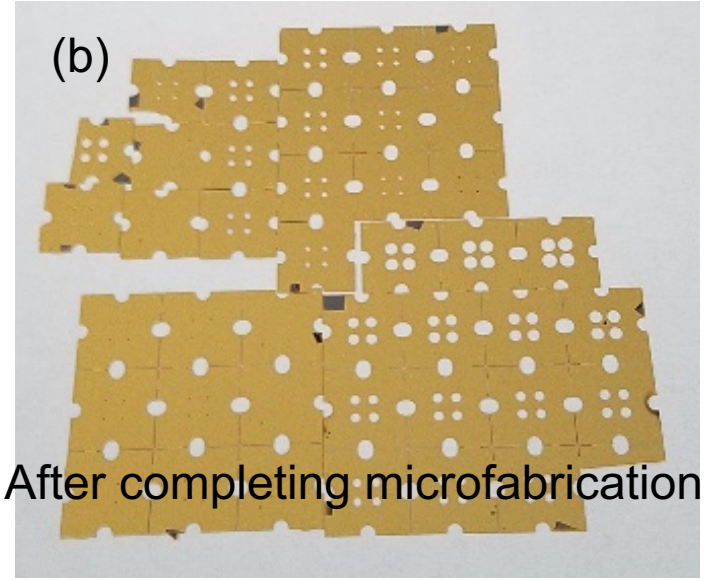

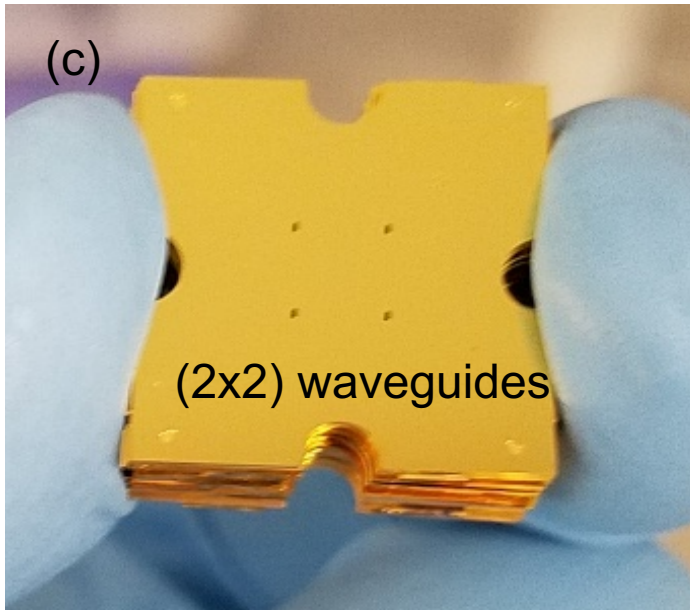

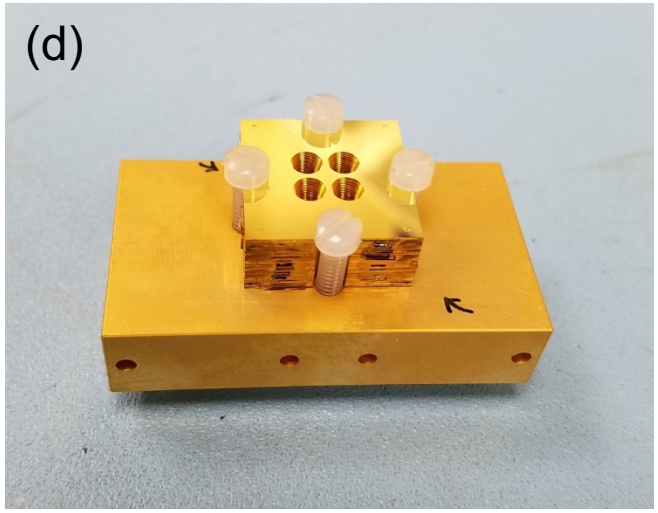

Silicon Microlens Antenna

- **High Aperture Efficiency, Gaussicity and Low Cross-Pol**

Very directive waveguide feed which improves:

- Phase Loss
- Reflections

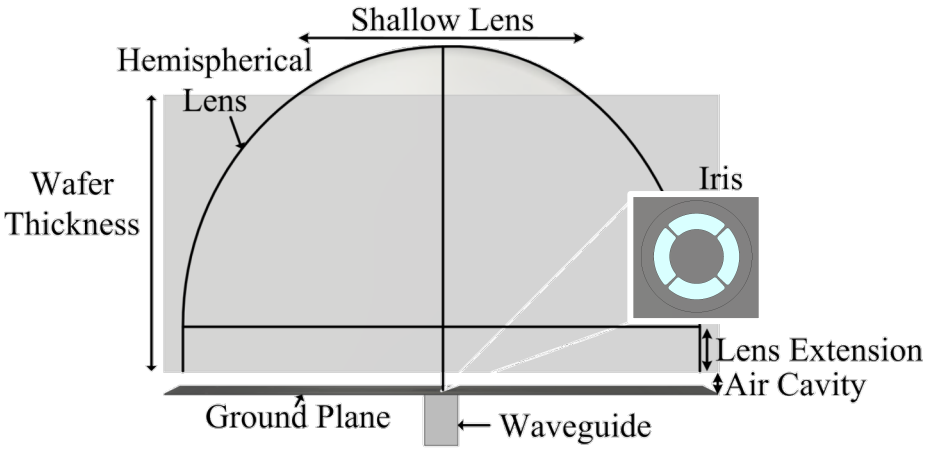

- **Dual-Polarized**

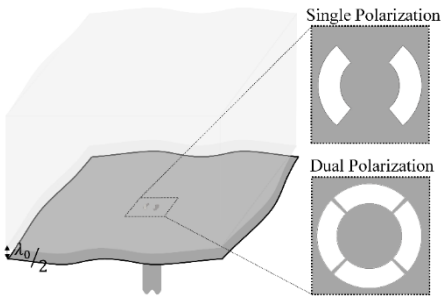

- **Compatible with silicon micro-machining techniques**
- **Allow wafer level integration for array manufacturing**

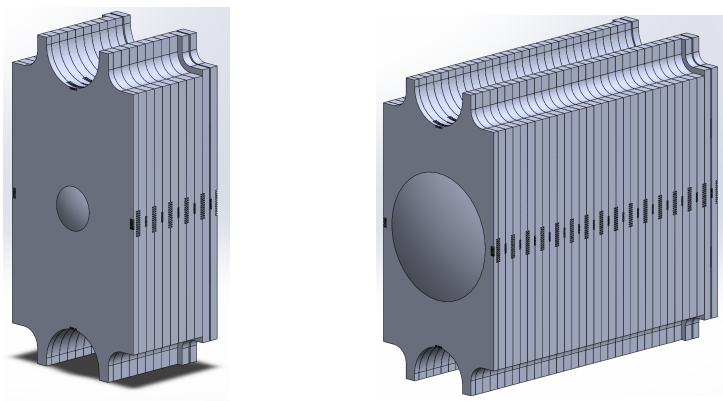

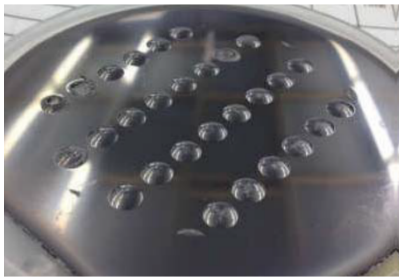

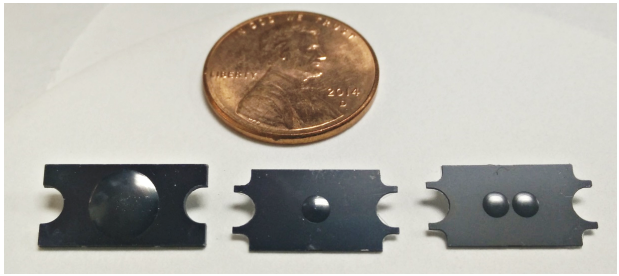

Ref: N. Llombart *et al.*, "Silicon Micromachined Lens Antenna for THz Integrated Heterodyne Arrays," in *IEEE Transactions on Terahertz Science and Technology*, vol. 3, no. 5, pp. 515-523, Sept. 2013.

Silicon Microlens Fabrication

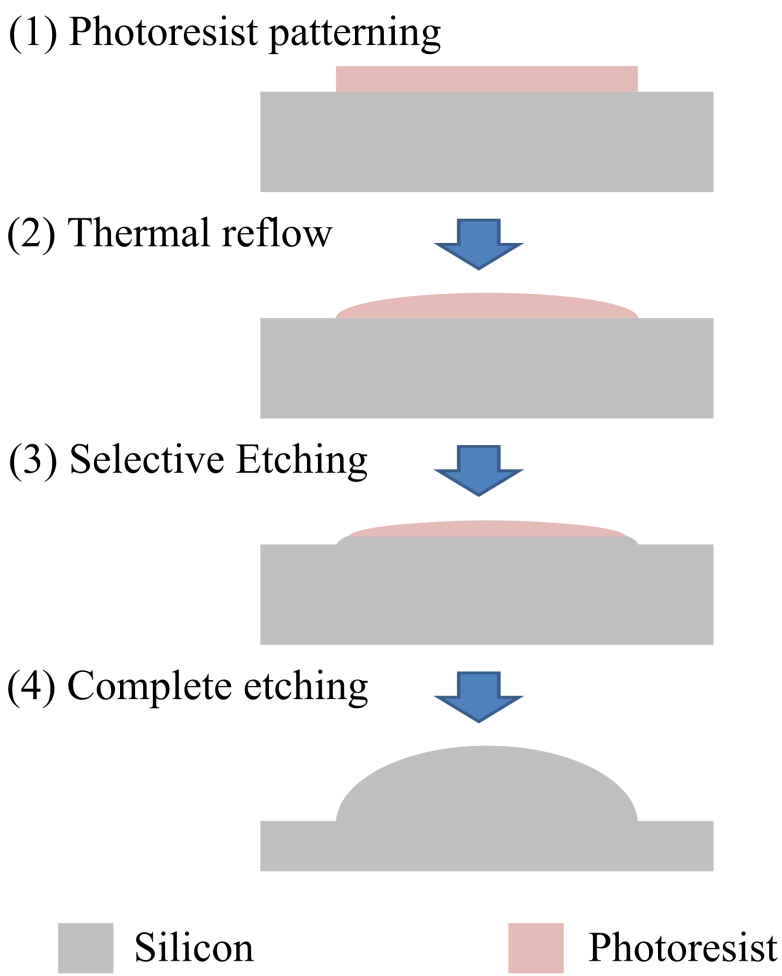

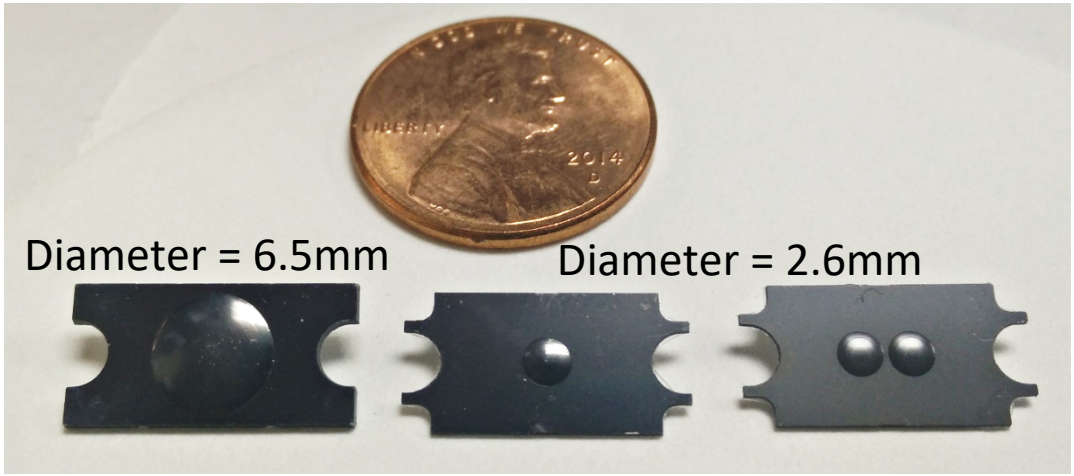

Deposition of 30µm of Parylene-C coating as matching layer (n = 1.62)

Silicon Microlens Assembly

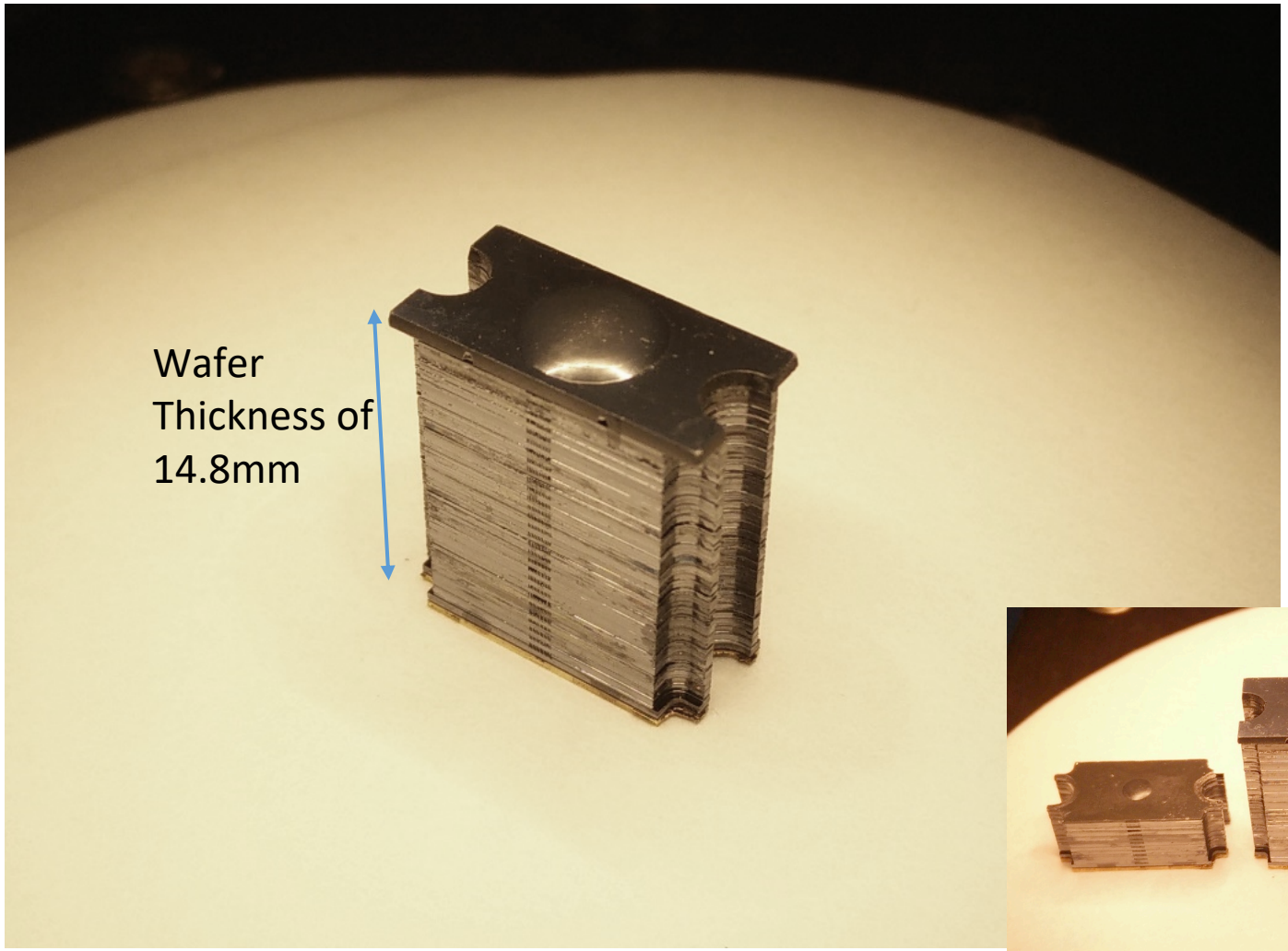

29 Wafers Assembled!

(Including Lens, Iris and Posts)

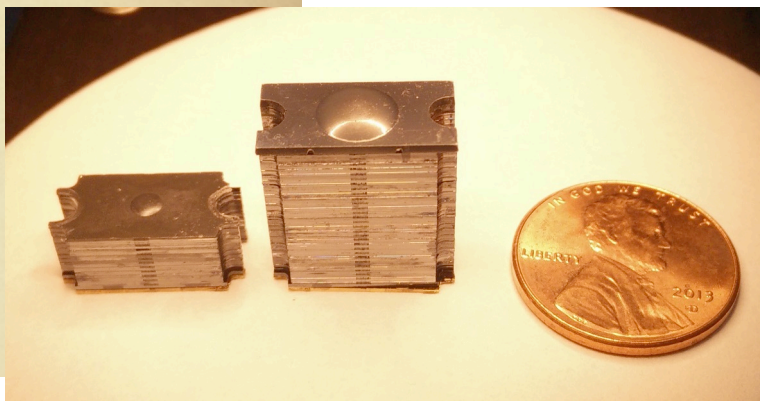

Antenna Measurement Setup at 1.9 THz

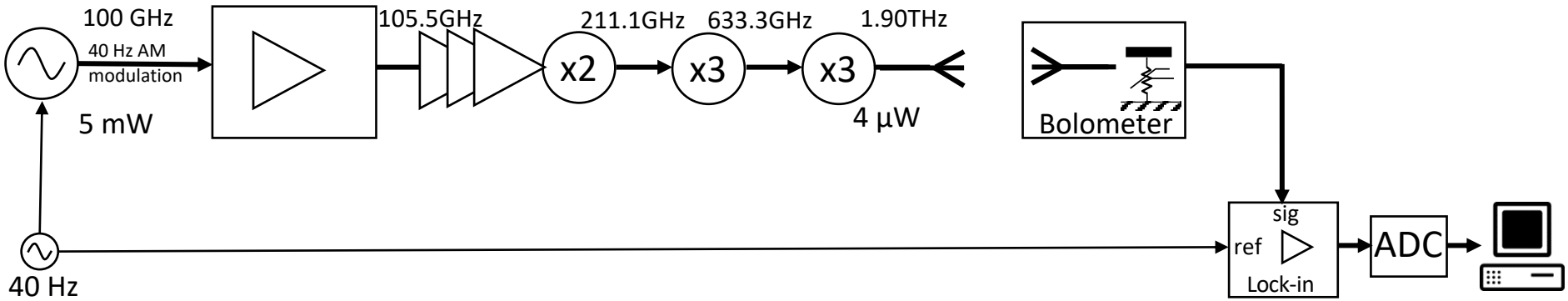

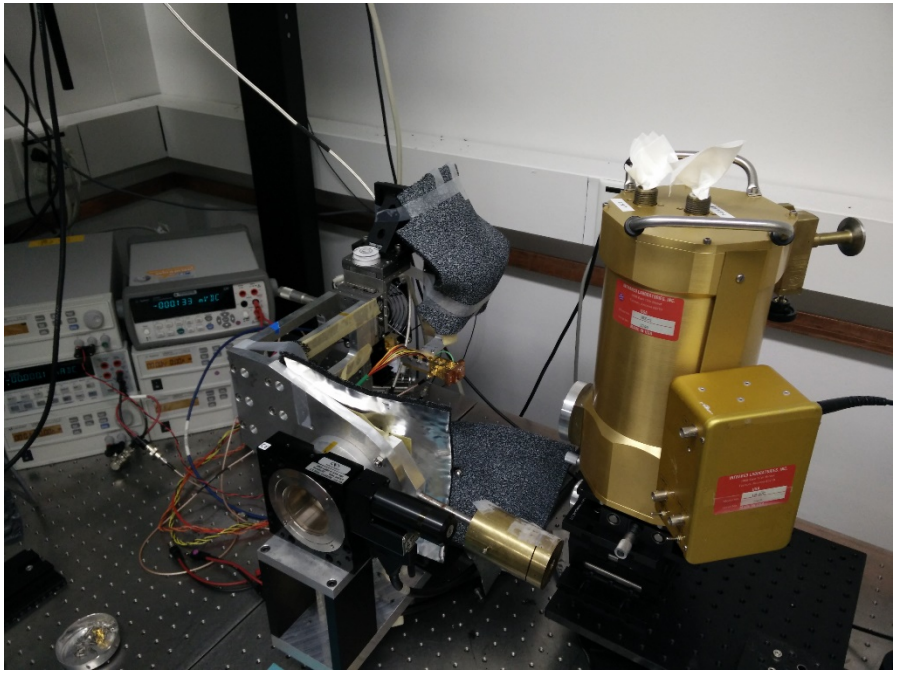

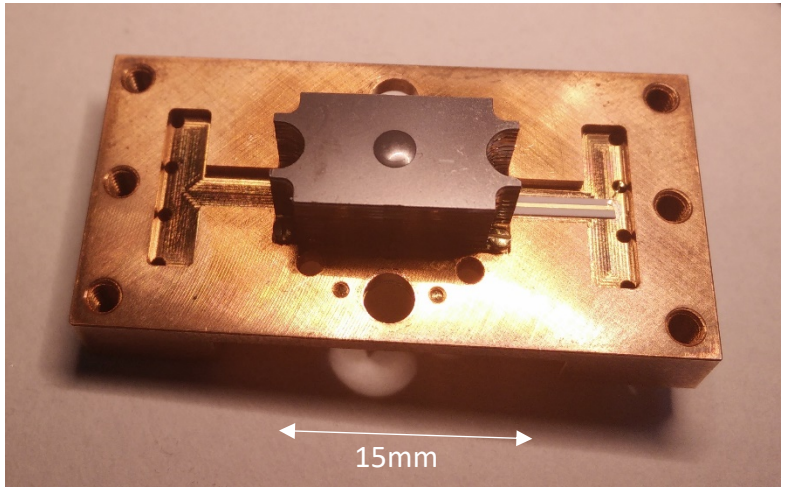

Measured Radiation Pattern

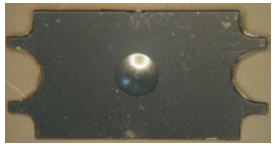

1.9 THz

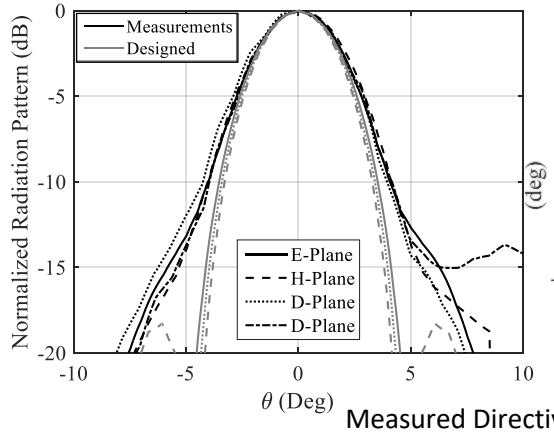

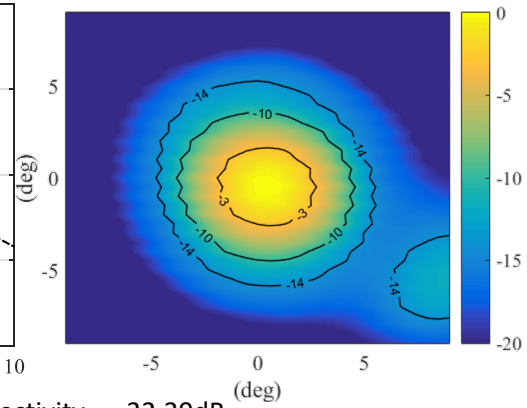

1.97 THz

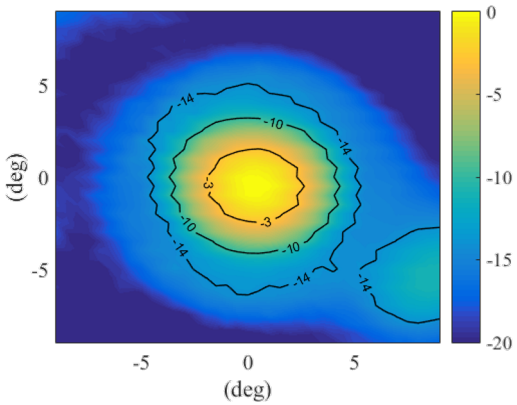

Measured Directivity = 32.29dB
Designed Directivity = 33.83dB

1.9 THz

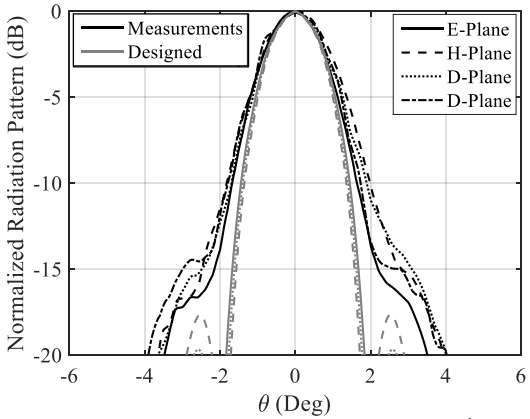

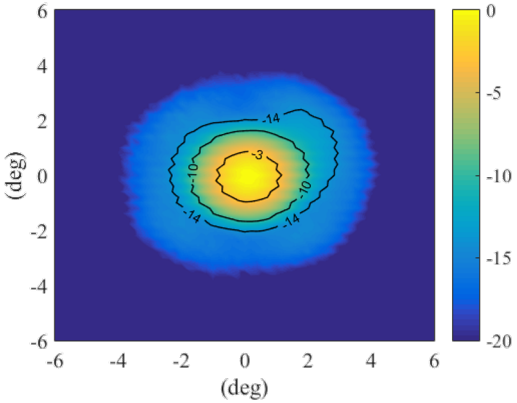

1.98 THz

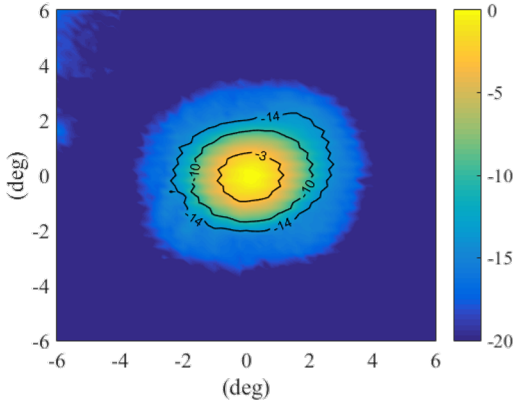

Measured Directivity = 39.21dB
Designed Directivity = 41.66dBdB

Ref: M. Alonso-delPino, T. Reck, C. Jung-Kubiak, C. Lee, and G. Chattopadhyay, "Development of Silicon Micromachined Microlens Antennas at 1.9 THz," *IEEE Transactions on Terahertz Science and Technology*, vol. 7, no. 2, pp. 191-198, March 2017.

Antenna Performance Comparison

	Lens 2.5mm	Lens 6.2mm	Horn 2.5mm
Illuminated Aperture	2.539mm	6.128mm	2.524mm
Gaussicity (%) (-10dB)	85.65%	84.87%	83.32%
Directivity	32.29dB	39.21dB	30.93dB
Illumination Efficiency	**66.39%**	**56.13%**	**47.82%**

Illumination Efficiency:
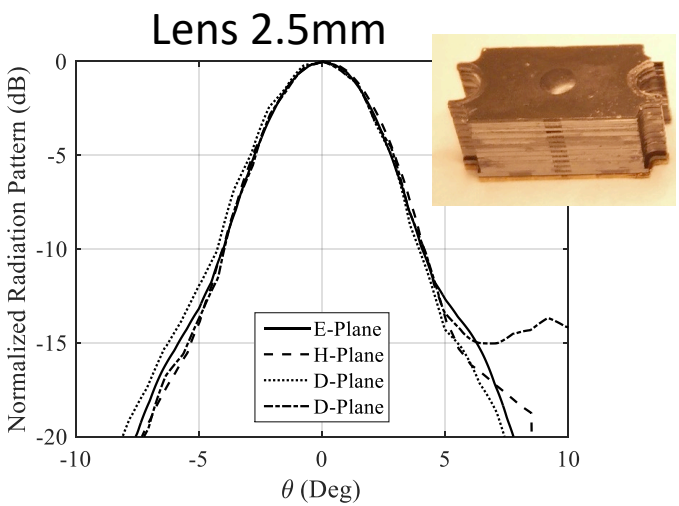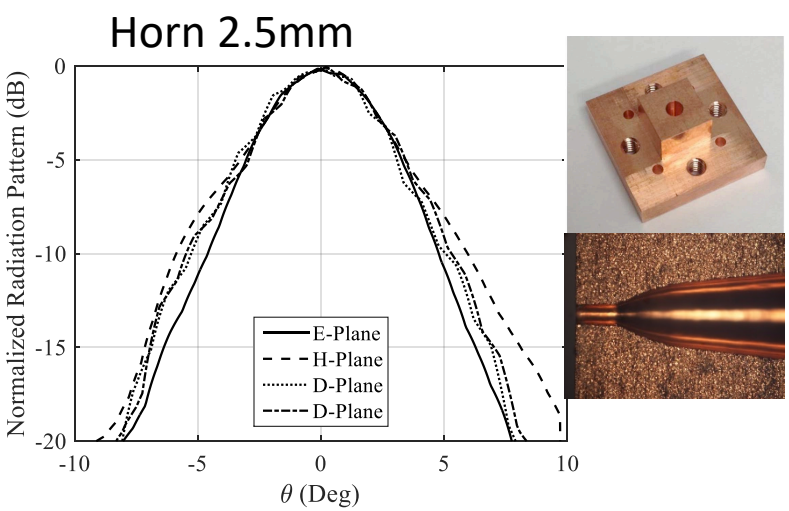
It expresses the uniformity of the field distribution on the aperture of the antenna $\eta_{il} = \frac{\lambda^2 Directivity}{4\pi Area}$