MAV
Mars Ascent Vehicle

Technology Development of an Electrically Driven Pump Fed Storable Liquid Bi-Propellant for a Mars Ascent Vehicle

Jet Propulsion Laboratory (JPL),
California Institute of Technology
David Vaughan

Pre-decisional information for planning and discussion only
Copyright 2017 California Institute of Technology. U.S. Government sponsorship acknowledged.

Co-authors

Barry Nakazono,

Jet Propulsion Laboratory, California Institute of Technology

Adam London, Amit Mehra,

Ventions LLC

Pre-decisional information for planning and discussion only
Copyright 2017 California Institute of Technology. U.S. Government sponsorship acknowledged.

Agenda

Mars Ascent Vehicle

- 2015-2016 MAV study results
- Why pursue his technology?
- Examples of Electrically driven Pumps
- General propulsion assumptions and trades
- MAV concept configurations/layouts
- Conclusions

Pre-decisional information for planning and discussion only
Copyright 2017 California Institute of Technology. U.S. Government sponsorship acknowledged.

Potential Mars Sample Return Architecture

Mars Ascent Vehicle

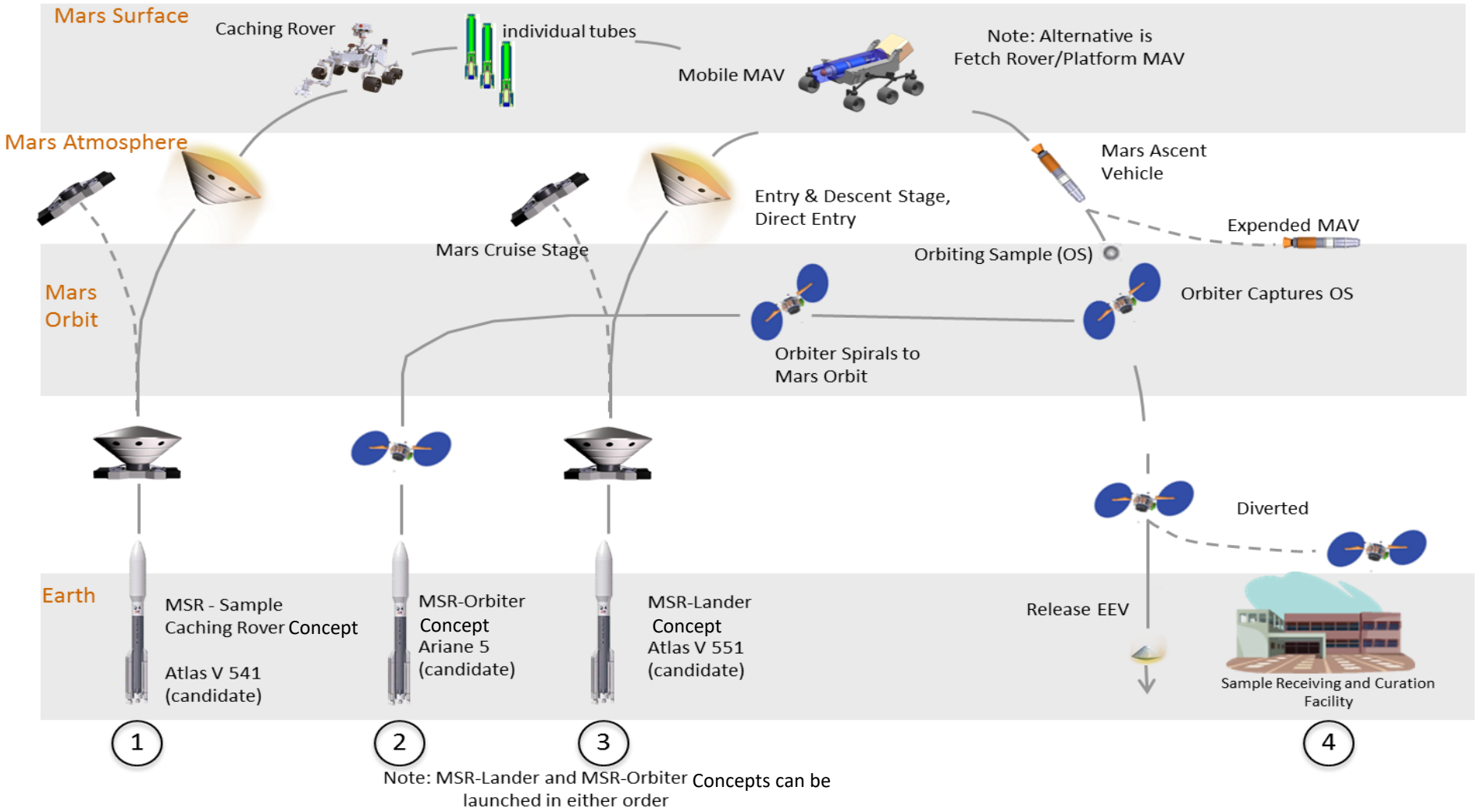

Pre-decisional information for planning and discussion only
Copyright 2017 California Institute of Technology. U.S. Government sponsorship acknowledged.

2015 Potential Mars Ascent Vehicle(MAV) Concept Trade results

Mars Ascent Vehicle

FOM	weight	Case 1a.3	Case 1b.3	Case 2a.3	Case 2b.3	Case 5.3	Case 6.3	Case 7.3
		1	2	3	4	5	6	7
Total **system** mass	15	7.08	6.18	8.13	7.20	8.47	7.76	8.55
System Power	15	8.44	7.56	8.97	7.88	6.98	5.83	7.51
Sample Environments	10	7.93	8.04	7.25	7.42	8.86	8.98	6.23
MAV max dim.	10	9.40	8.98	9.57	9.09	8.65	8.42	9.08
Flexibility	15	0.57	0.00	1.66	2.79	9.54	8.54	10.20
MAV System Cost	8	6.00	6.00	5.00	5.00	8.00	7.00	10.00
MAV Test and Verification	8	5.00	5.00	4.00	4.00	10.00	8.00	7.00
MAV Comp. TRL	7	8.00	8.00	7.00	7.00	8.00	10.00	6.00
MAV complexity	12	6.00	6.00	5.00	5.00	6.00	7.00	10.00
Total Weighted Score		**631**	**592**	**631**	**614**	**822**	**780**	**845**

Configuration	Description
1	Solid propellant, 2 stage with guided 1st and 2nd stage
2	Solid propellant, 2 stage with guided 1st and 2nd stage , 1st stage OTS design
3	Solid propellant, 2 stage with guided 1st and unguided 2nd stage
4	Solid propellant, 2 stage with guided 1st and unguided 2nd stage , 1st stage OTS design
5	Single stage to orbit, pump fed storable bi-propellant engine, MMH and MON30
6	Single stage to orbit, pressure fed storable bi-propellant engine, MMH and MON30
7	Single stage to orbit, Hybrid motor with storable oxidizer, MON30

Pre-decisional information for planning and discussion only
Copyright 2017 California Institute of Technology. U.S. Government sponsorship acknowledged.

Why Electrically Driven Pump fed Propulsion?

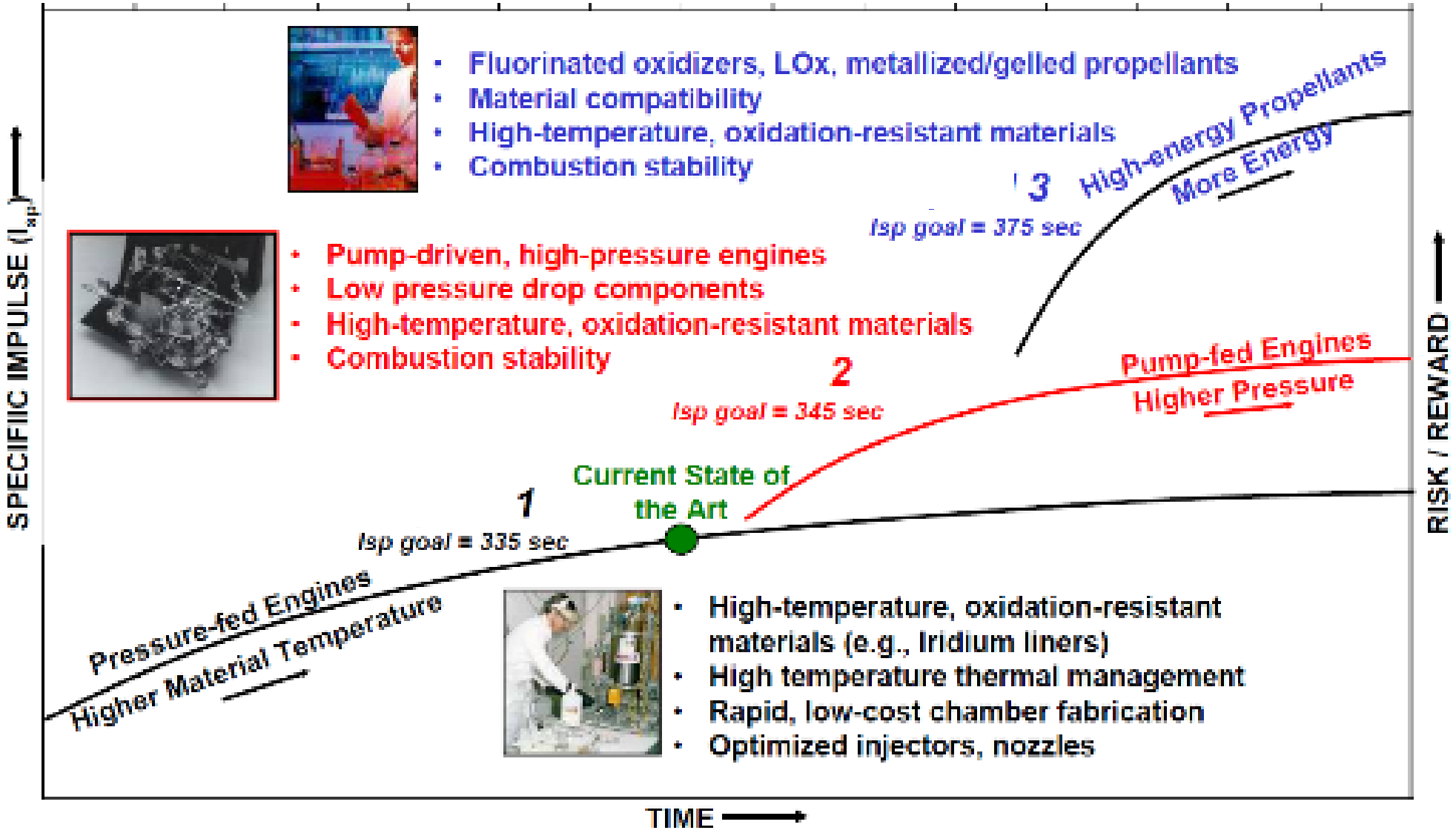

Pre-decisional information for planning and discussion only
Copyright 2017 California Institute of Technology. U.S. Government sponsorship acknowledged.

Historical Perspective of Pressure Fed missions

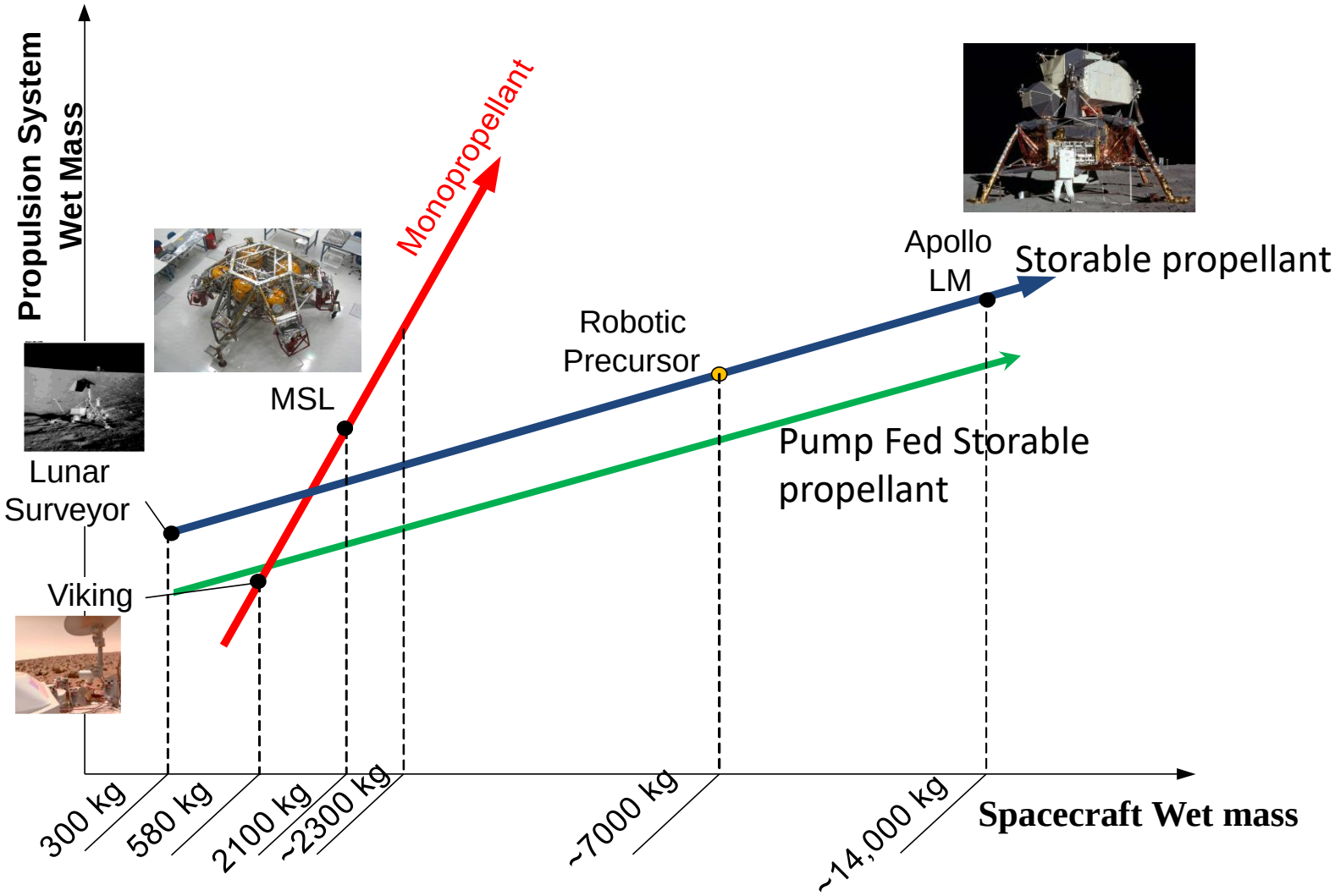

Pre-decisional information for planning and discussion only
Copyright 2017 California Institute of Technology. U.S. Government sponsorship acknowledged.

Why use EDPF technology

Mars Ascent Vehicle

- Obtaining higher chamber pressure with electrically driven pump provides increased thrust, increased Isp, decreases vehicle stack height and minimizes thruster and propellant tank mass.
  - Drawback has been battery capacity
    - Battery capacity (Li –ion) is now competitive
- Main industrial partner Ventions LLC.
  - Ventions have developed several small electrically driven pumps
  - Have contracts with both NASA and DARPA to develop small pumps for use with different propellants
    - Cryogenic and storable propellants
- Goal for FY16 was to scale a Ventions heritage design for a MAV.
  - This takes advantage of Ventions detailed MEL and PEL
  - Over 90% of piece parts are heritage and known.

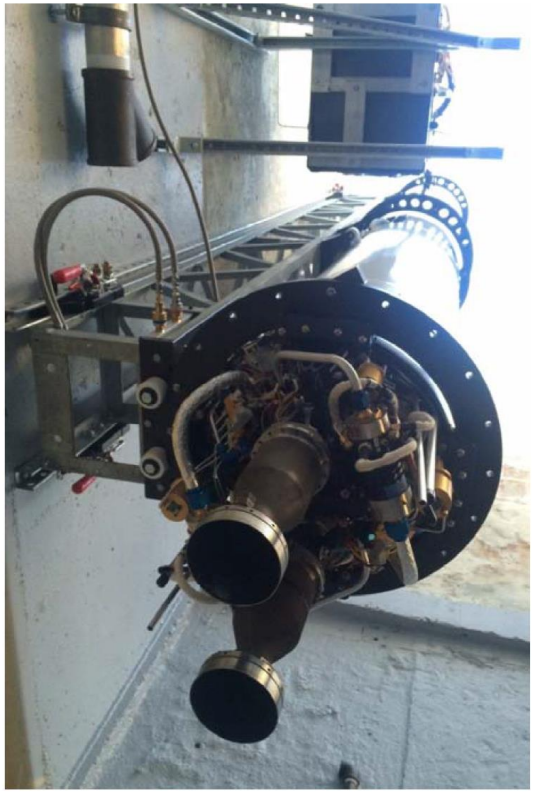

Ventions LLC SALVO launch vehicle with two pump fed 4500N thrusters (LOX kerosene)

Pre-decisional information for planning and discussion only
Copyright 2017 California Institute of Technology. U.S. Government sponsorship acknowledged.

Examples of Electrically Driven Pumps

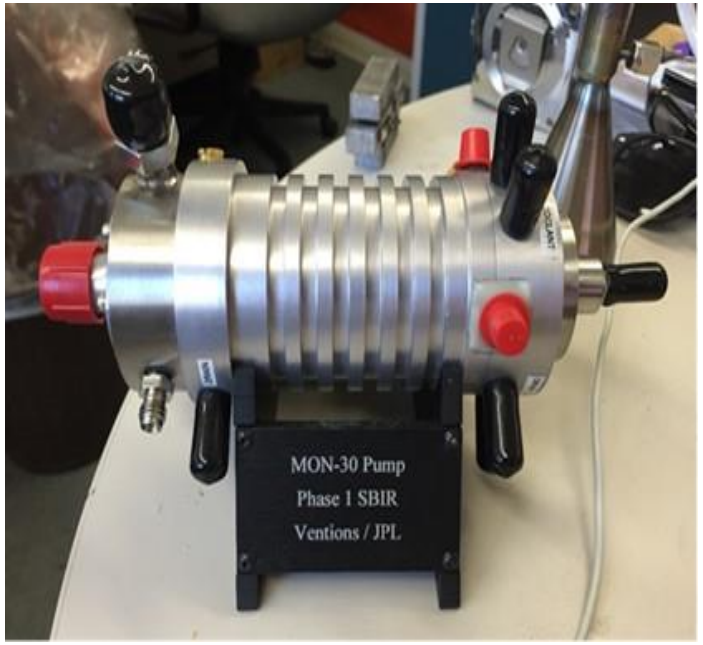

– Mon-30 EDPF

– Examples of Ventions LLC EDPF development

Pre-decisional information for planning and discussion only
Copyright 2017 California Institute of Technology. U.S. Government sponsorship acknowledged.

General Propulsion Assumptions and Trades

Mars Ascent Vehicle

- Specific trades for case 5 (EDPF configuration)
  - Separate GN2 RCS and GHe main pressurization systems were traded against a single GN2 system.
    - Separate and single systems resulted in GLOM's <1 kg difference
    - Enabled by pump fed main tank pressurization demands of only 50 psi
    - Single system has fewer components
    - Single system allows dual regulation scheme to feed the main propellant tank
      - 10k psi supply pressure regulated to 1250 psi for RCS
      - Then regulated to 50 psi for main propellant tanks.
  - Chamber pressure of 500 psi was selected based on Ventions LLC heritage.
  - Based on previous studies, a thrust level of 3650N and nozzle expansion ratio of 40:1 was baselined for this study
    - Optimization of thrust/trajectory, nozzle expansion ratio, chamber pressure and stack height was not performed during this study.

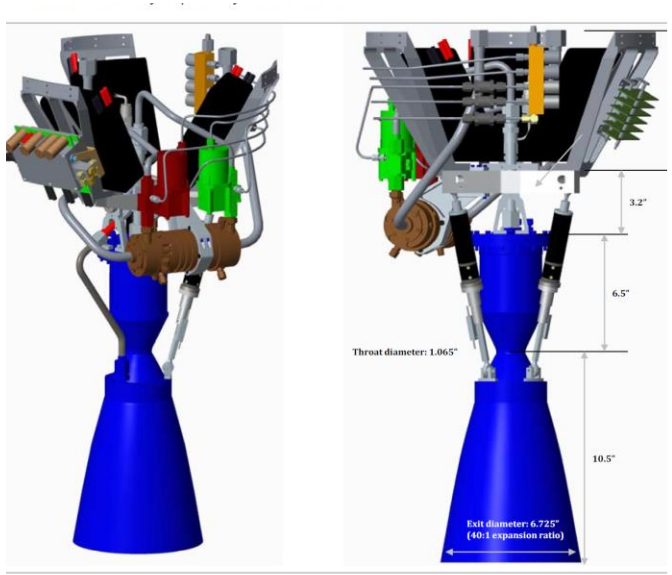

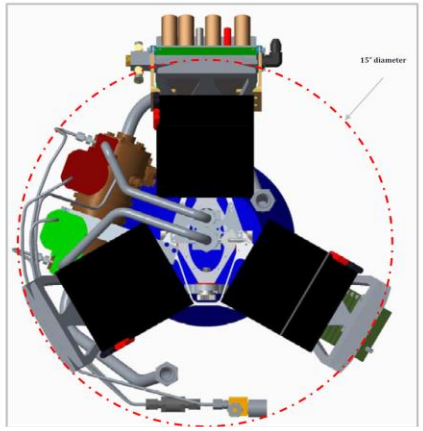

Pre-decisional information for planning and discussion only
Copyright 2017 California Institute of Technology. U.S. Government sponsorship acknowledged.

General Propulsion Assumptions and Trades (cont)

Mars Ascent Vehicle

- Specific trades for Case 6 (SOA pressure fed system)
  - 300 psi chamber pressure was selected for the main engine to keep the stack height competitive with case 5
    - Lower chamber pressure reduces H_e pressurant tank and gas mass (lowers vehicle GLOM)
      - Increases engine assembly length/stack height
  - GN_2 RCS sub-system was selected
    - Minimizes propulsion system wet mass
    - 450 psi main tank pressure
    - Based on previous studies, a thrust level of 3650N and nozzle expansion ratio of 40:1 was baselined for this study
    - Optimization of thrust/trajectory, nozzle expansion ratio, chamber pressure and stack height still needs to be performed.

Pre-decisional information for planning and discussion only
Copyright 2017 California Institute of Technology. U.S. Government sponsorship acknowledged.

Case 6 – Pressure Fed bi-propellant MAV concept

Mars Ascent Vehicle

MMH and NTO (MON30) bi-propellant system
GN_2 storage pressure 10000 psi
Tank pressure 450 psi
Chamber pressure 300 psi
Thrust 3560 N
Mixture ratio 1.65

Separate RCS operates at 1250 psi
4 thrusters @22N and 4 thrusters @5 N
Potential to reduce to 6 thrusters @ 10N.

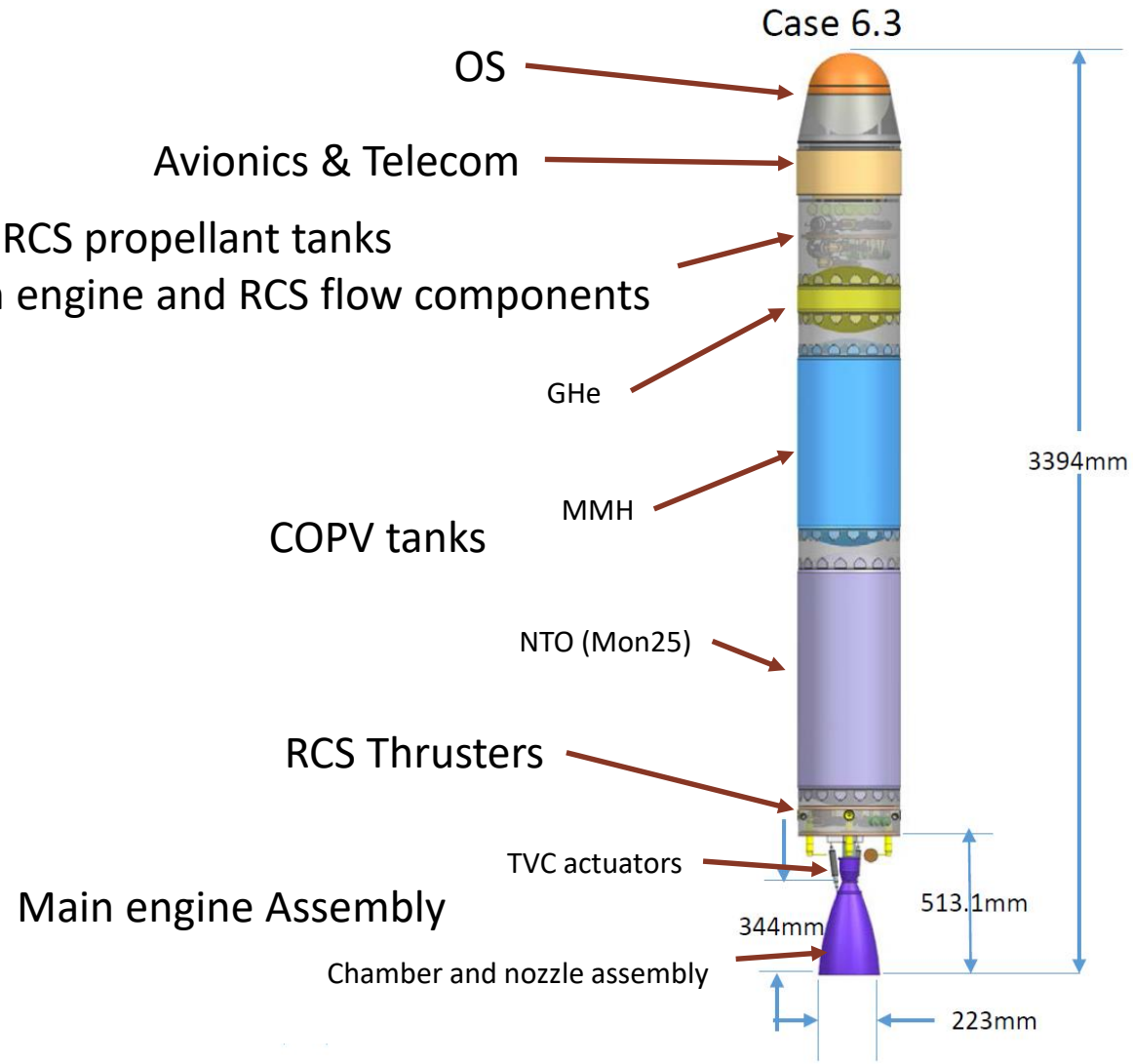

Pre-decisional information for planning and discussion only
Copyright 2017 California Institute of Technology. U.S. Government sponsorship acknowledged.

Case 5 - Electrically Driven Pump Fed bi-propellant MAV concept

Mars Ascent Vehicle

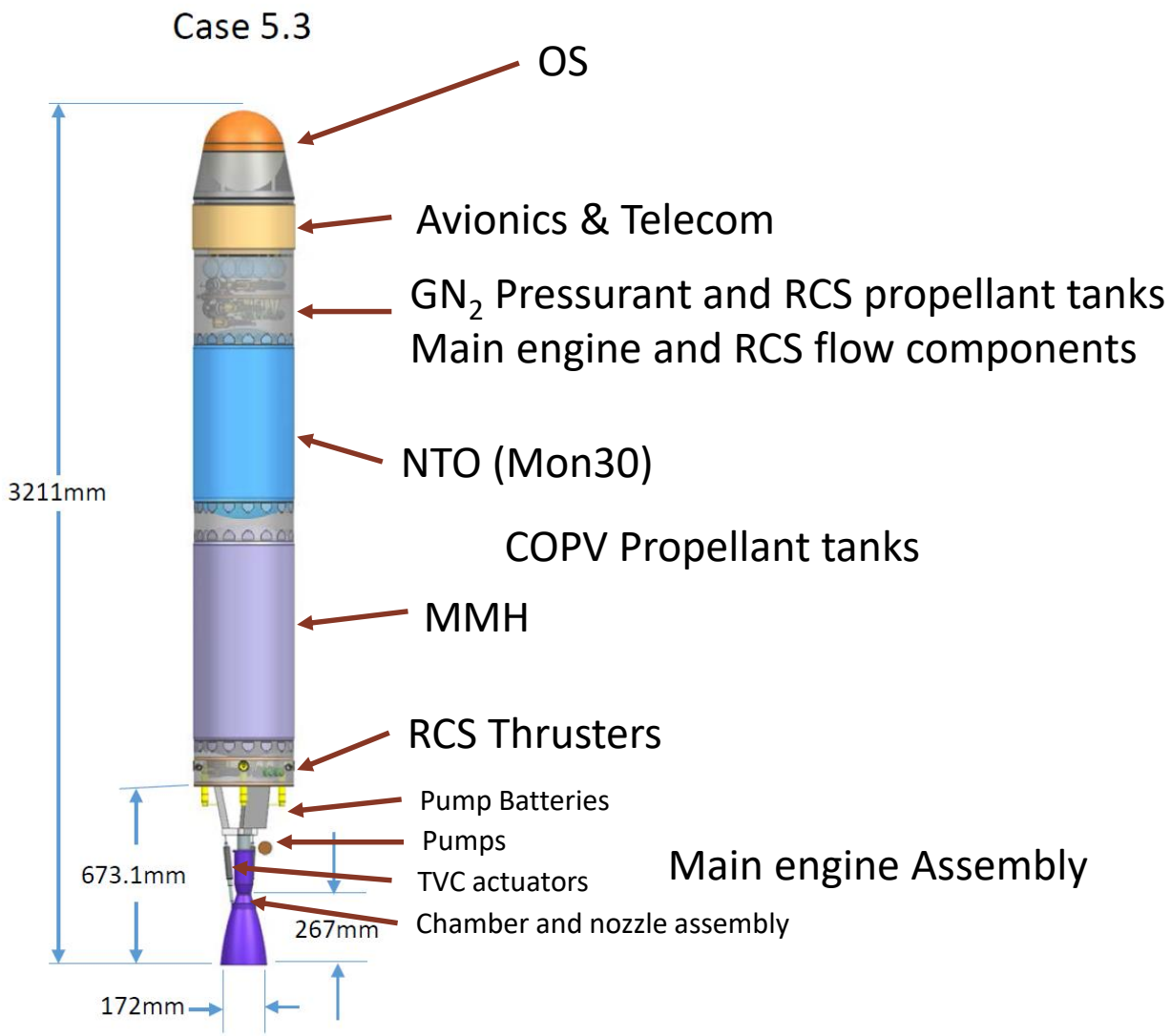

MMH and NTO (MON30) bi-propellant system
GN_2 storage pressure 10000 psi
Tank pressure 450 psi
Chamber pressure 300 psi
Thrust 3560 N
Mixture ratio 1.65

Separate RCS operates at 1250 psi
4 thrusters @22N and 4 thrusters @5 N
Potential to reduce to 6 thrusters @ 10N

Pre-decisional information for planning and discussion only
Copyright 2017 California Institute of Technology. U.S. Government sponsorship acknowledged.

Conclusions

Mars Ascent Vehicle

- Storable bi-propellant offers a potential solution as the propulsion system for a Mars Ascent Vehicle (MAV)
- Electrically Driven Pump Fed (EDPF) system provides advantage in length and mass over SOA pressure fed bi-propellant system.
- This is a result of
  - Advances in battery technology
  - Additive manufacturing of high speed rotating components
  - Increase in performance from higher chamber pressure than SOA pressure fed systems.

Pre-decisional information for planning and discussion only
Copyright 2017 California Institute of Technology. U.S. Government sponsorship acknowledged.