SSC18-VI-03

The ISARA Mission – Flight Demonstration of a High Gain Ka-Band Antenna for 100Mbps Telecom

Richard E. Hodges, Dorothy K. Lewis, Matthew J. Radway, Armen S. Toorian, Fernando H. Aguirre, Daniel J. Hoppe, Biren N. Shah, Andrew A. Gray
Jet Propulsion Laboratory, California Institute of Technology
4800 Oak Grove Drive, Pasadena, CA 91109; 818-354-8851
Richard.E.Hodges@jpl.nasa.gov

Darren W. Rowen and Richard P. Welle
The Aerospace Corporation
2310 E. El Segundo Blvd., El Segundo, CA 9024; 310-336-3633
Darren.Rowen@aero.org

Andrew E. Kalman, Adam W. Reif and Jerami M. Martin
Pumpkin, Inc.
750 Naples Street, San Francisco, CA 94112; 415-584-6360
aek@pumpkininc.com

ABSTRACT

The NASA sponsored ISARA (Integrated Solar Array and Reflectarray Antenna) mission successfully demonstrated a 100 Mbps Ka-band CubeSat communications capability. The enabling technology is a high gain reflectarray antenna integrated into a modified Pumpkin "Turkey Tail" solar array which wraps around the spacecraft body, essentially requiring near zero volume to accommodate. A simple low gain feed is used to distribute RF power to the reflectarray through free space. The 0.5kg ISARA antenna mass is compatible with the requirements of a 3U (10x10x10 cm^3) spacecraft. The ISARA mission validated this approach in a flight technology demonstration. A unique on-orbit measurement system provided accurate measurement of the antenna gain from space. This system demonstrated 100Mbps downlink data rate capability using a relatively simple ground station with a 70cm parabolic reflector antenna. The spacecraft also verified ISARA solar panel output power and demonstrated the operational capability to accurately point the antenna to a Ka-band ground station, a key requirement for a telecom system. ISARA achieved a number of technological firsts. It is believed to be the first reflectarray antenna flown in space, first high gain antenna integrated with solar panels, first calibrated reflectarray antenna gain and pattern measurement performed from space and the first 3U CubeSat to demonstrate 100 Mbps using a small, low-cost ground station.

HIGH DATA RATE: NEEDS AND CHALLENGES

CubeSats are increasingly becoming an important platform for Earth imaging and science instruments such as those used to study Earth climate processes from Low Earth Orbit (LEO)[1]. Additionally, these small satellites are being deployed for applications beyond LEO, including interplanetary exploration. These applications require a high data rate telecom system in order to deliver their science payload.

Most CubeSat missions have been limited to relatively modest data rates due to limitations on antenna gain, spacecraft power and attitude control. In addition, the lower frequency bands in common use (e.g. UHF or S-band) have narrow frequency spectrum allocations that limit bandwidth and create a barrier to increased data rates[2]. Consequently, to achieve higher data rates there is a need for high gain antennas and radios operating at higher frequency bands, such as Ka-band. In order for a high frequency telecom system to achieve wide applicability, it must have low cost, low mass, low spacecraft power consumption and it must use minimal stowage volume. The telecom system is not an end in itself – it is of paramount importance to preserve the limited resources of a small satellite for the payload.

These requirements present a significant challenge for CubeSats. RF amplifier Power Added Efficiency (PAE) and thermal considerations tend to limit transmit power to less than about 5W. The alternative to increase data rate is to increase antenna gain. Consequently, the challenge is to develop a high gain antenna technology that is low cost, low mass and stows compactly in a CubeSat.

To address this need, NASA's Space Technology Mission Directorate funded the ISARA (Integrated Solar Array and Reflectarray Antenna) project[3]. The primary goals of ISARA are to develop a unique Ka-band reflectarray antenna and to demonstrate through on-orbit testing that the antenna, used in conjunction with a 200mW Ka-band power amplifier and a relatively simple, low cost ground station, can achieve at least 100 Mbps downlink data rate. As discussed below, the ISARA antenna stows in the "dead space" between the exterior of a 3U CubeSat bus and the walls of a traditional, P-POD launch canister. As such, the antenna consumes essentially zero spacecraft volume. The total mass of 0.5kg for the antenna system leaves adequate margin for payloads. A solar array mounted on the opposite side of the reflectarray antenna provides roughly 24W of prime spacecraft power, which is sufficient to power a typical Ka-band telecom system. Importantly, the production cost of this system represents a relatively small incremental increase over the cost of a comparable solar array.

It is worthwhile to acknowledge that >100Mbps Ka-band data rates have recently been demonstrated on Planet's *Dove* system[4]. This important achievement proves the viability and the promise of a Ka-band system. Planet achieved this using a low cost 12 dB antenna on the satellite, but the ground station required an antenna ranging from 4.5m to 7.6m, with a beamwidth of ~0.10 degree. In contrast, with the ISARA reflectarray 100 Mbps data rate can be achieved with a relative low cost ground station using a 70 cm reflector antenna. If the ISARA spacecraft antenna had been used with a ~4.6m ground station, it is likely that *Gigabit* per second data rates would be possible.

PAYLOAD

The ISARA payload is comprised of three elements: (1) Integrated Solar Array and Reflectarray Antenna, (2) Standard Gain Antenna (SGA) and (3) Ka-Band Exciter (KBE). These are briefly described below.

ISARA Antenna

The ISARA antenna is a folded panel reflectarray (FPR) comprised of thin, stiff panels that are connected by electromechanical hinges to enable the antenna to be folded up to fit into the launch canister. The FPR reflectarray concept was developed for the ISARA project to provide a compact CubeSat stowage solution. FPR antennas sized to fit a CubeSat typically have about ~30-35 dB gain and stow in the space between the bus and the launch canister (e.g. P-POD). The reflectarray is deployed using a simple spring loaded hinge deployment mechanism that was adapted from a standard Pumpkin, Inc. "Turkey Tail" 3U solar panel design [7] as illustrated in Figure 1. FPR technology offers the advantage of low mass density and low production cost, but the scalability is limited to ~3-6 panels due to tolerance accumulation and panel thickness constraints. This is a very attractive CubeSat high gain antenna technology for many applications.

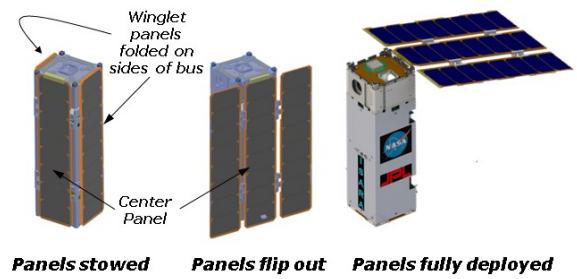

Figure 1. Illustration of ISARA antenna deployment

The ISARA FPR is comprised of three 33.9 cm × 8.26 cm reflectarray panels that provide 33.5 dB of gain at 26 GHz. As illustrated in Figure 2, RF power is supplied to the reflector from a small feed antenna that is mounted on the spacecraft bus. The feed is a thin microstrip patch design that fits between the center reflectarray panel and deploys to the position shown in the figure, so the feed consumes zero payload volume. The printed circuit patches on the reflectarray then provide the required phase to the reflected signal in order to collimate and focus the beam.

The ISARA antenna incorporates an array of 24 solar cells on the opposite side of the reflectarray, and provides about 24W of prime spacecraft power in addition to a high speed datalink. This solar array, provided by Pumpkin, Inc.[5], supplies DC current to the Electronic Power Subsystem in the bus that was designed by The Aerospace Corporation. This system was proven in both ground testing and on-orbit to provide the requisite power.

Standard Gain Antenna

The SGA is used to provide a reference signal in order to perform an on-orbit gain calibration of the reflectarray antenna. This antenna, which can be seen in Figure 2, is a simple 4x4 element microstrip patch array that produces 18.9 dB gain and a relatively broad antenna beam pattern. The SGA was designed by JPL to be very rugged and insensitive to thermal environment so that it provides a very stable and reliable signal for comparison to the high gain antenna. The SGA gain was measured with the unit mounted on the spacecraft bus prior to launch.

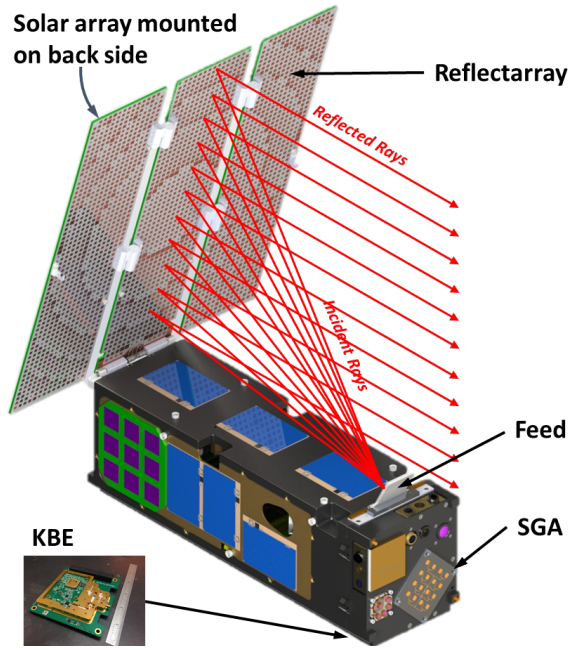

Figure 2. CAD model of the ISARA spacecraft showing the payload components. The red lines illustrate the reflectarray beam focusing concept.

Ka-Band Exciter

The KBE is a Ka-band (26 GHz) RF power amplifier designed specifically for ISARA. As the illustration in Figure 2 suggests, the KBE is a single circuit board that occupies 97mm x 97mm x 20mm of payload volume and weighs 200 gm. It is located adjacent to the Feed and the SGA in order to minimize transmission line losses. This amplifier produces 200 mW of RF power to meet the ISARA link budget requirements. This power amplifier is compatible with the recently developed IRIS software defined radio[6], so a fully functional Ka-band telecom system could be developed in a short time.

A key component of the KBE is the RF single pole, double throw switch that toggles output power between the reflectarray and the SGA. As explained below, this is the mechanism used to calibrate gain measurements in the on-orbit test.

TECHNOLOGY DEMONSTRATION

A five month space flight demonstration was used to verify antenna performance to TRL 7 and thereby demonstrate the 100 Mbps data rate capability. As illustrated in Figure 3, the key elements of this experiment are the spacecraft payload, the Ka-band ground station and the UHF ground station network

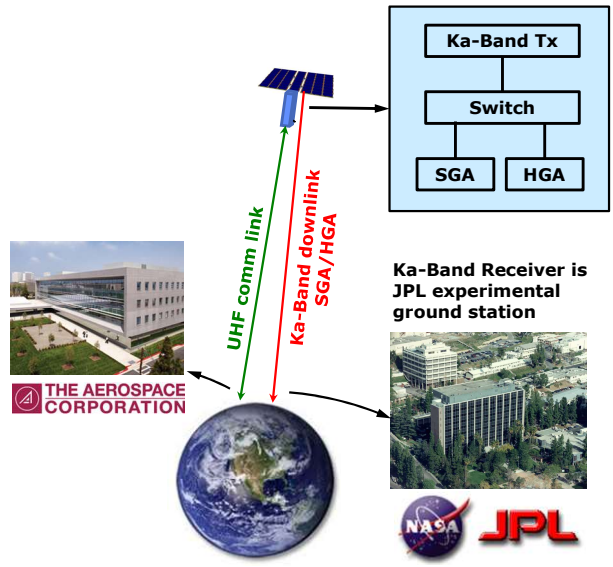

Figure 3. Schematic diagram illustrating the key elements of the ISARA on-orbit experiment design.

The spacecraft, developed by The Aerospace Corporation, is a 3U CubeSat carrying the Ka-band payload described in the preceding section. Spacecraft command and control is provided by The Aerospace Corporation's UHF ground station network. A Ka-band ground station developed by JPL was used to measure the antenna performance and verify high data rate by signal-to-noise (SNR) measurement via a link budget. The HGA gain was measured by switching between the HGA and the standard gain antenna (Figure 3). Rapid switching (~1 Hz) between HGA and SGA provides a way to accurately measure the difference in signal level that is not influenced by atmospheric attenuation, space loss, receiver stability, etc. The HGA gain can be determined by adding the measured signal difference level to the known SGA gain. In addition, the spacecraft can be slewed on orbit in order to measure the antenna patterns. The on-orbit data was compared to measurements that were taken prior to launch.

UHF Ground Station Network

The Aerospace Corporation operates a UHF ground station network with numerous stations. Due to NTIA licensing restrictions for the ISARA experiment, in most cases only the ground station in California was used for the experiment (although other stations were used to upload commands, download telemetry, etc.). The UHF ground station is used to program spacecraft pointing for a given spacecraft pass, download GPS and ADCS pointing knowledge data, KBE telemetry, etc. following a pass.

Ka-Band Ground Station

The ISARA Ka-band ground station, located on top of a nine story building at the Jet Propulsion Laboratory, is the key high data rate experimental link. The station was developed with simple requirements in mind, focused on verifying the Level 1 on-orbit mission requirement following the successful launch. The station utilizes an open loop recording device that allows the team to measure beam peak location, antenna gain and antenna patterns. A simplified block diagram of the station is shown in Figure 4. Since ISARA only transmits a simple carrier wave tone, there is no back-end radio that demodulates "data".

To keep costs in line with the project's budget, most of the devices employed in the station electronics are standard off-the-shelf components. The exceptions to this were the positioner, which was a refurbished unit that had recently been declared as excess by the NASA Deep Space Network (DSN), and the 70cm diameter Ka-Band parabolic dish antenna, which was a custom build to accommodate our operating frequency. Additional facilities work was also needed to accommodate the dish in its current location. The resulting station satisfies the requirements of the ISARA mission, but could easily be modified into a more traditional station as needed, leaving JPL with an asset for the future.

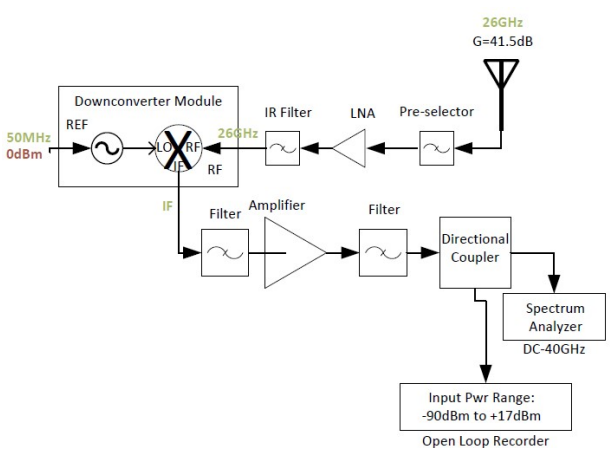

Figure 4: Simplified Ka-band ground station block diagram.

On-Orbit Experiment – Typical Pass

The ISARA CubeSat flies in Low Earth Orbit at 450km with an approximately 90 minute orbital period and typically a 3-5 minute observation time per pass. In principle, two passes per day are available to measure telecom data rate, gain and antenna patterns. However, in practice it was found that one pass per day was actually usable.

Prior to a pass, the spacecraft and the Ka-band ground station are programmed to execute the required pointing maneuvers and data collection. On the spacecraft side, the Attitude Determination and Control System (ADCS) is programmed to execute the requisite spacecraft pitch, roll and yaw desired for the pass. For example, this could include staring at the ground station, conical beam peak search, pattern cuts to measure sidelobe peaks, etc. The high accuracy ADCS was used to achieve the required 0.2º antenna pointing accuracy. The ground station is programmed to power up and initialize the data acquisition system and point the ground station antenna toward the spacecraft. Experimental passes are operated autonomously and can be run at any time of day or night.

Following a pass, telemetry data is downloaded from the spacecraft through the UHF ground station. This data includes pointing data obtained from the ADCS subsystem, GPS location data and KBE telemetry that includes transmit power level. All of these data are time tagged so that they can be correlated with the ground station recorded data.

Ground station recorded data includes HGA and SGA signal level as well as a record of ground station pointing data. This data is correlated with the spacecraft pointing data in order to verify antenna pointing, plot antenna patterns as a function of angle relative to the spacecraft, etc. Note that during brief periods of a pass the solar array is not expected to generate power. At other times the solar array can be positioned for optimal solar power generation.

RESULTS

The NASA Level 1 requirements for the ISARA mission include both ground measurements and on-orbit results. The purpose of this is to directly verify that the Ka-band antenna on-orbit performance matches what was measured prior to launch. The pre-launch antenna performance will be detailed in a future publication, but is very similar to breadboard data that was reported previously[7].

As noted earlier, the key Level 1 requirement is Ka-band antenna gain. Ground measurements showed the gain is 35.6 dBic, which is in very good agreement with antenna model simulations. The on-orbit passes described above confirmed this antenna gain through a series of conical scans that were used to search for the main beam.

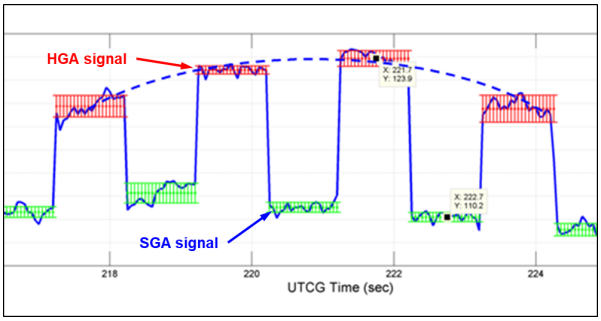

Figure 5. On-orbit HGA and SGA signals recorded by the JPL Ka-band ground station.

Figure 5 shows signal levels recorded for a typical pass (March 25, 2018). The pulses in the figure correspond to a two second HGA/SGA switching period, so each pulse is 1 second in duration. The HGA signal has uncertainty values highlighted with red shading, while the SGA uncertainty is green. Note the quadratic shape of the high gain antenna main beam is clearly evident (a dashed line has been added to illustrate this). In contrast, the SGA signal level remains relatively constant, which is expected because the SGA beamwidth is much broader.

Averaging several such passes determined a measured on orbit gain of about 32.9 dB with an uncertainty of about 0.8 dB. This value compares favorably to the pre-launch measured gain of 33.6 dB. It should be noted that, due to practical issues that were being solved during the time these data were collected, it is not known exactly how close the measured peak is to the actual beam peak. At least one pass observed a peak gain of 33.4 dB with an uncertainty of 0.6 dB.

These measured gain values have been used in a detailed link budget of the kind JPL routinely uses to predict and assess the performance of spacecraft communications systems. This link budget assumed signal to noise ratio performance values consistent with the ISARA ground station equipment (e.g. a 70 cm ground station antenna). This link budget shows that such a system will achieve a 100Mbps data rate while maintaining an average 5.7 dB link budget margin for a typical LEO mission.

CONCLUSIONS

The ISARA mission has successfully demonstrated a high bandwidth Ka-band CubeSat communications capability that is applicable to commercial, government and military systems. For a modest increase in mass, volume and cost, this technology increases downlink data rates from a baseline of 9.6 kbps for existing UHF systems to over 100 Mbps – a 105 fold increase in data capacity. The key to this technical advance is a high gain antenna (HGA) that is integrated into a commercially available 3U CubeSat solar array with minimal modification of the existing solar panel design. To validate this approach, ISARA has flown a 5 month technology demonstration mission that elevates the antenna technology from TRL 5 to TRL 7 and demonstrates the capability for 100 Mbps data rate.

Acknowledgments

The authors gratefully acknowledge our colleagues at the Jet Propulsion Laboratory who contributed to this work. Long Chen performed structural analysis and contributed to the design of the panel composite material. Eric Sunada performed thermal analysis of the composite materials. Josh Miller, Curtis Jin, Barzia Tehrani and Matt Chase were instrumental in building, testing and operating the JPL Ka-band ground station. Numerous personnel at The Aerospace Corporation have been critically important to the success of the ISARA mission. The authors wish to give a special thanks to Tony Freeman, who was the original instigator of this project, and to Dhack Muthulingam who was an original co-I and early contributor.

The work described in this paper was carried out in part at the Jet Propulsion Laboratory, California Institute of Technology, under a contract with the National Aeronautics and Space Administration.

Copyright 2018 California Institute of Technology. U.S. Government sponsorship acknowledged.

References

1. National Academies of Sciences, Engineering, and Medicine. *Achieving Science with CubeSats: Thinking Inside the Box*. Washington, DC: The National Academies Press, 2016. https://doi.org/10.17226/23503.
2. Yost, B., *State of the Art of Small Spacecraft Technology*, 2018, [online] Available: https://sst-soa.arc.nasa.gov/09-communications.
3. https://www.nasa.gov/directorates/spacetech/small_spacecraft/isara_project.html
4. Devaraj,K., Kingsbury, R., Ligon, M., Breu, J., Vittaldev, V., Klofas, B., Yeon, P., Colton, K. "Dove High Speed Downlink System", Proceedings of the 31th Annual AIAA/USU Conference on Small Satellites, pp. 1-9, 2017.
5. http://www.pumpkinspace.com
6. Duncan, C.B., Smith, A.E. and Aguirre, F.H., "Iris Transponder–Communications and Navigation for Deep Space," in 28th Annual

AIAA/USU Conference on Small Satellites, 2014.

7. Hodges, R. E., Radway, M. J., Toorian, A., Hoppe, D. J., Shah, B., Kalman, A. E., "ISARA – Integrated Solar Array and Reflectarray Antenna CubeSat Deployable Ka-band Antenna," Proc. 2015 Ant. Prop. Soc. Int. Symp, Vancouver, B.C., July 2015.