National Aeronautics and
Space Administration

Jet Propulsion Laboratory
California Institute of Technology
Pasadena, California

Connecting Minds. Exchanging Ideas.

Interconnecting Technologies for Terahertz Components and Instruments

Goutam Chattopadhyay

Jet Propulsion Laboratory, California Institute of Technology
Pasadena, California, United States

© 2017 California Institute of Technology. Government sponsorship acknowledged.

Packaging at Millimeter-Waves

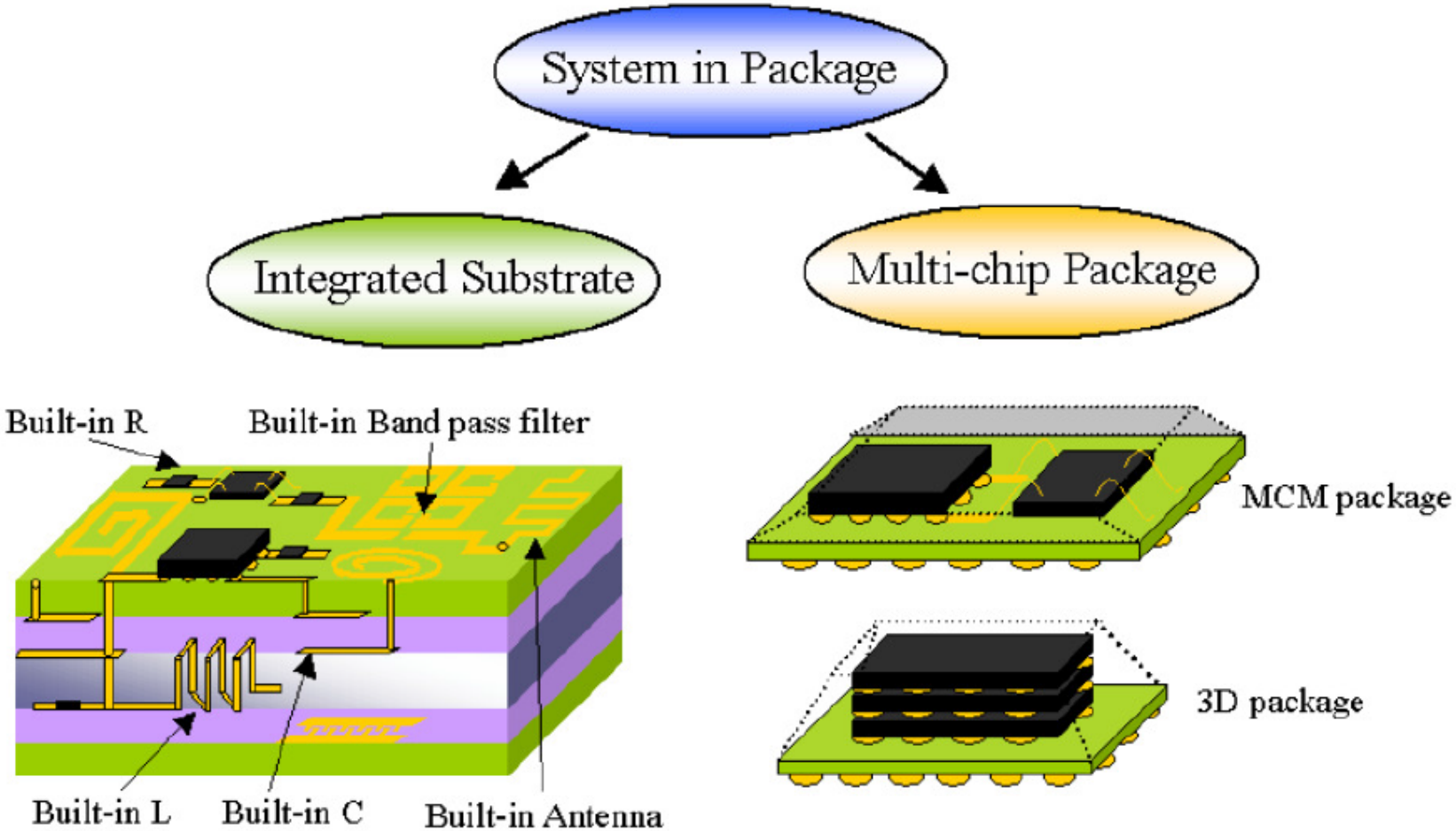

Different System-on-Package (SOP) Technologies

SiP / Materials / Processes

- Expensive Connectors and Waveguides not Required.
- Integrated mm-wave/digital/DC Paths within a Packaging Substrate.
- Shorter Path from Die to Antenna
- Low-Loss/Low-Cost Passive Components, Transmission Lines, and Antennas can be Realized Off-Chip

- Low Temperature Cofired Ceramic (LTCC)
- Liquid Crystal Polymer (LCP)
- Organic Substrate Derived from PCB
- Embedded Die in Integrated Fanout Wafer Level Package (info-WLP)
- Integrated Passive Devices on Glass, Silicon, or Ceramic

Packaging at Millimeter-Waves

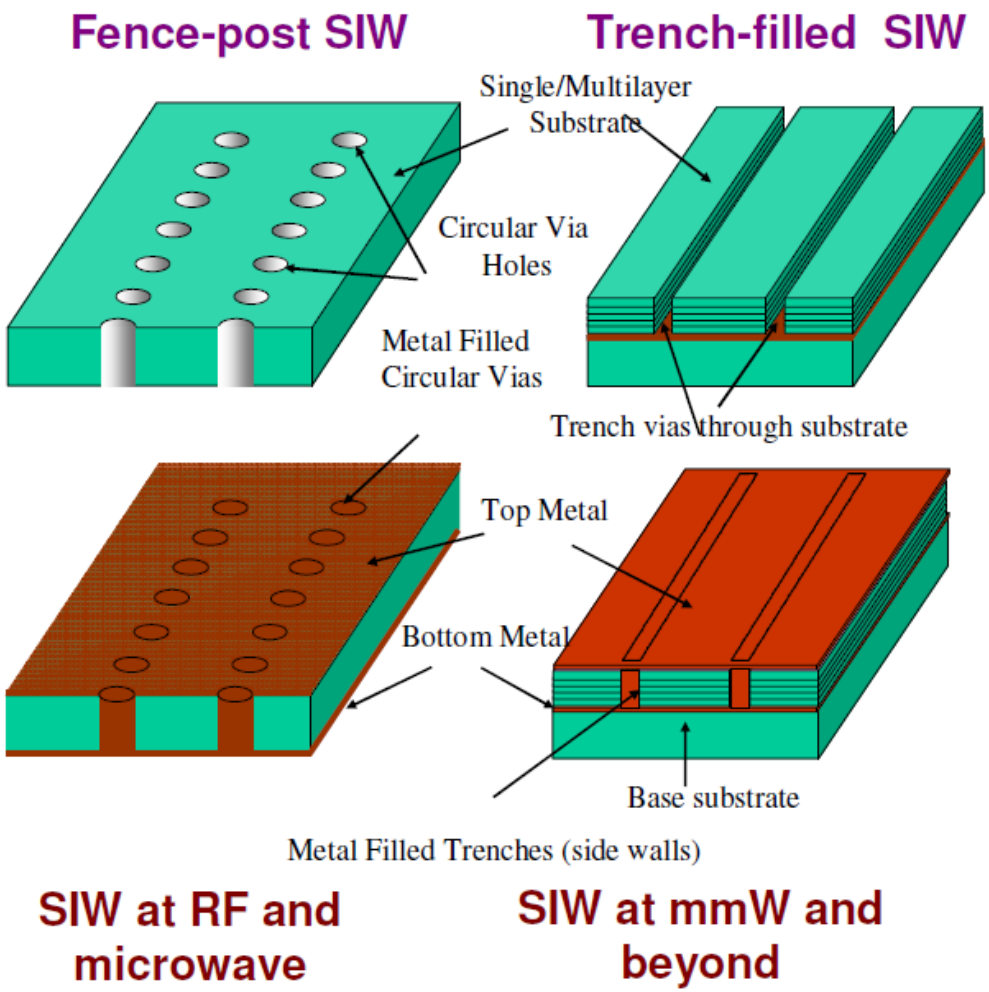

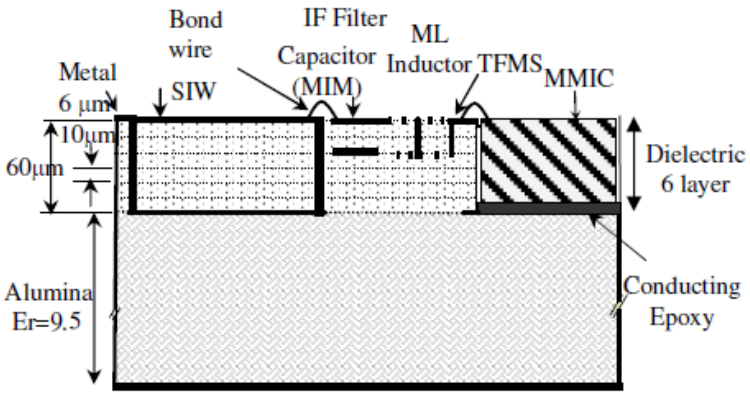

Cross-sectional View of Six layer process

Different Substrate Integrated Waveguide (SIW) Packaging Technologies

Packaging at Millimeter-Waves

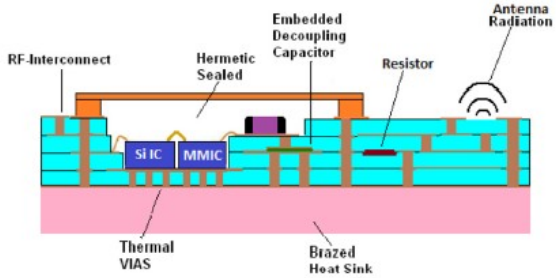

(a) Ceramic/LTCC

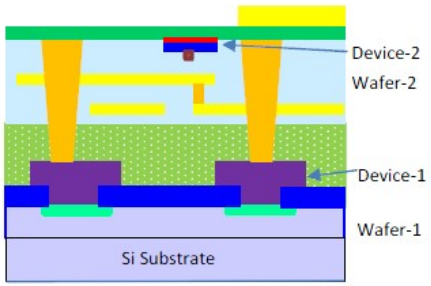

(d) Wafer-scale

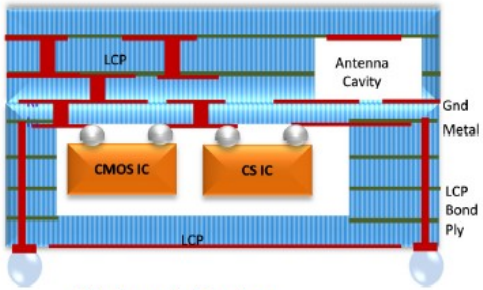

(b) Organic/Laminate

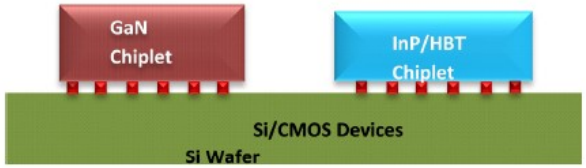

(e) Chiplets

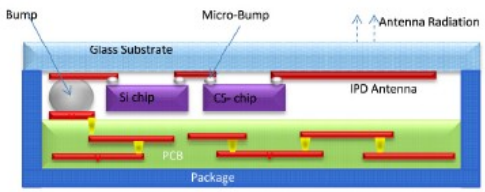

(c) IPD (Si/Glass)

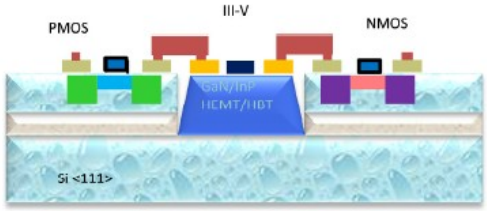

(f) Monolithic

Multi-layer heterogeneous integration: Ceramic LTCC based, Organic Laminate based, Si/Glass based, Wafer-scale, Chiplets based. (Ref: K. Samanta)

Packaging at Millimeter-Waves

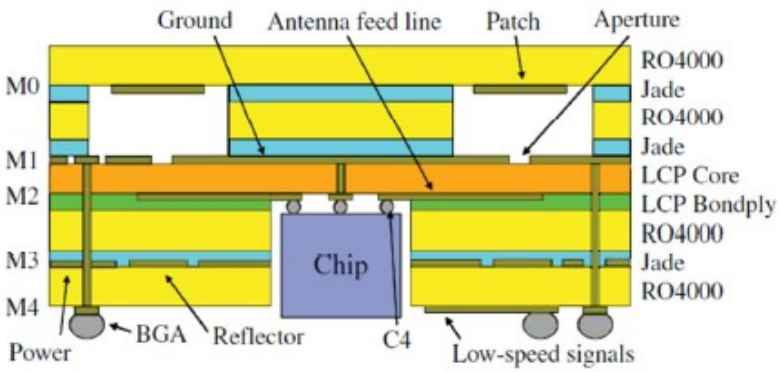

(a)

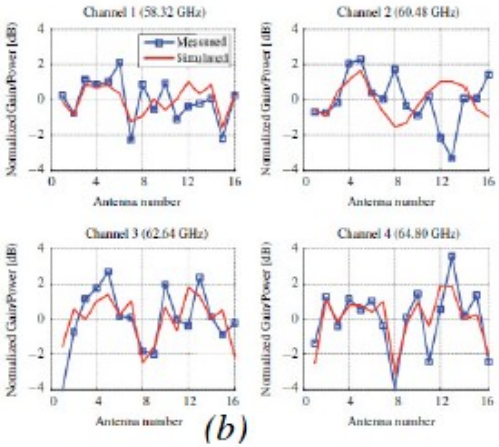

(b)

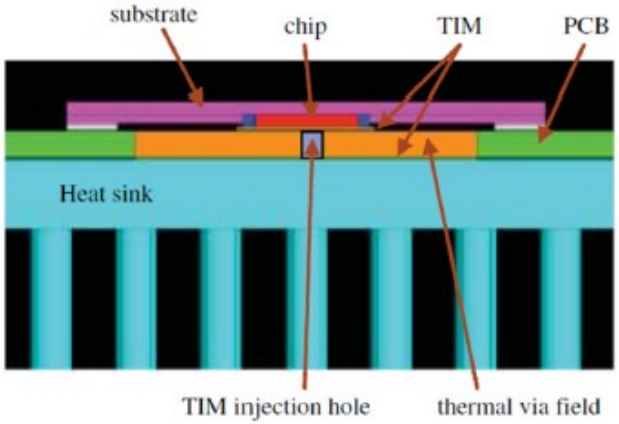

(c)

(d)

Fully Integrated Laminate/Organic Based 60 GHz Transmitter and Receiver (Ref: K. Samanta)

Terahertz Components and Challenges

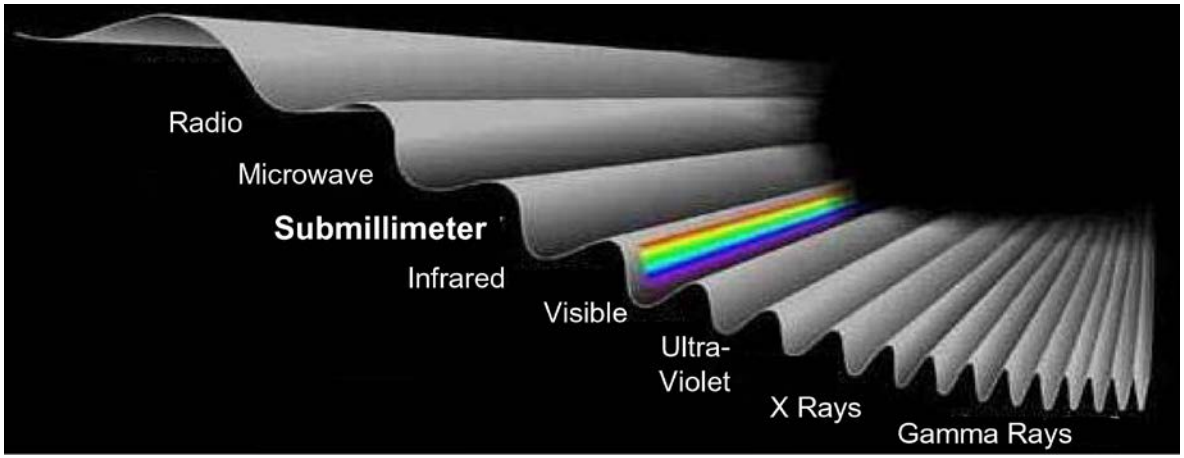

1 mm > λ > 100 µm
300 GHz < ν < 3 THz
(100 GHz < ν < 6 THz)

Metal waveguides are generally used for packaging.

Waveguide loss at 600 GHz: 0.04 dB/mm

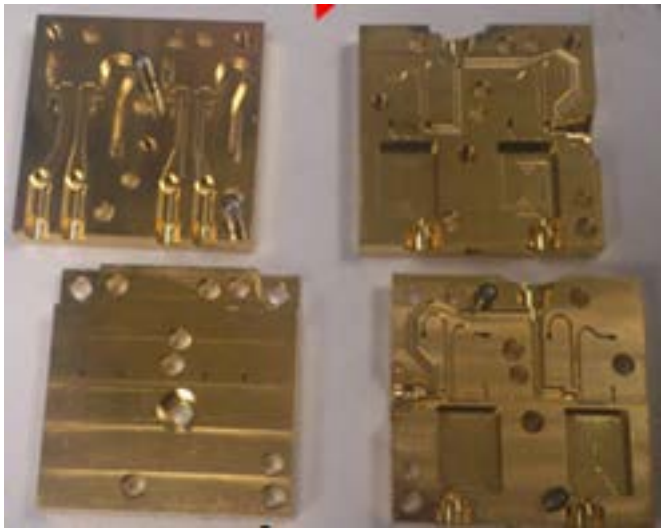

Waveguide Split-Block

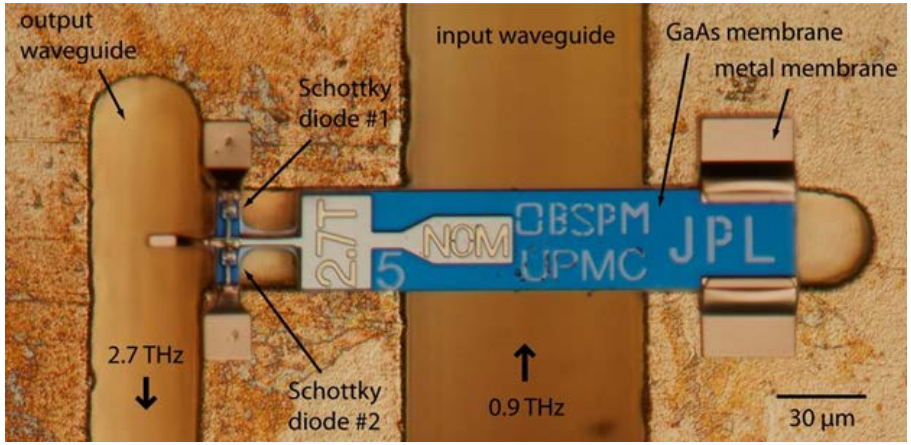

Human hair diameter: 20-200 um

Typical THz Instrument Block Diagram

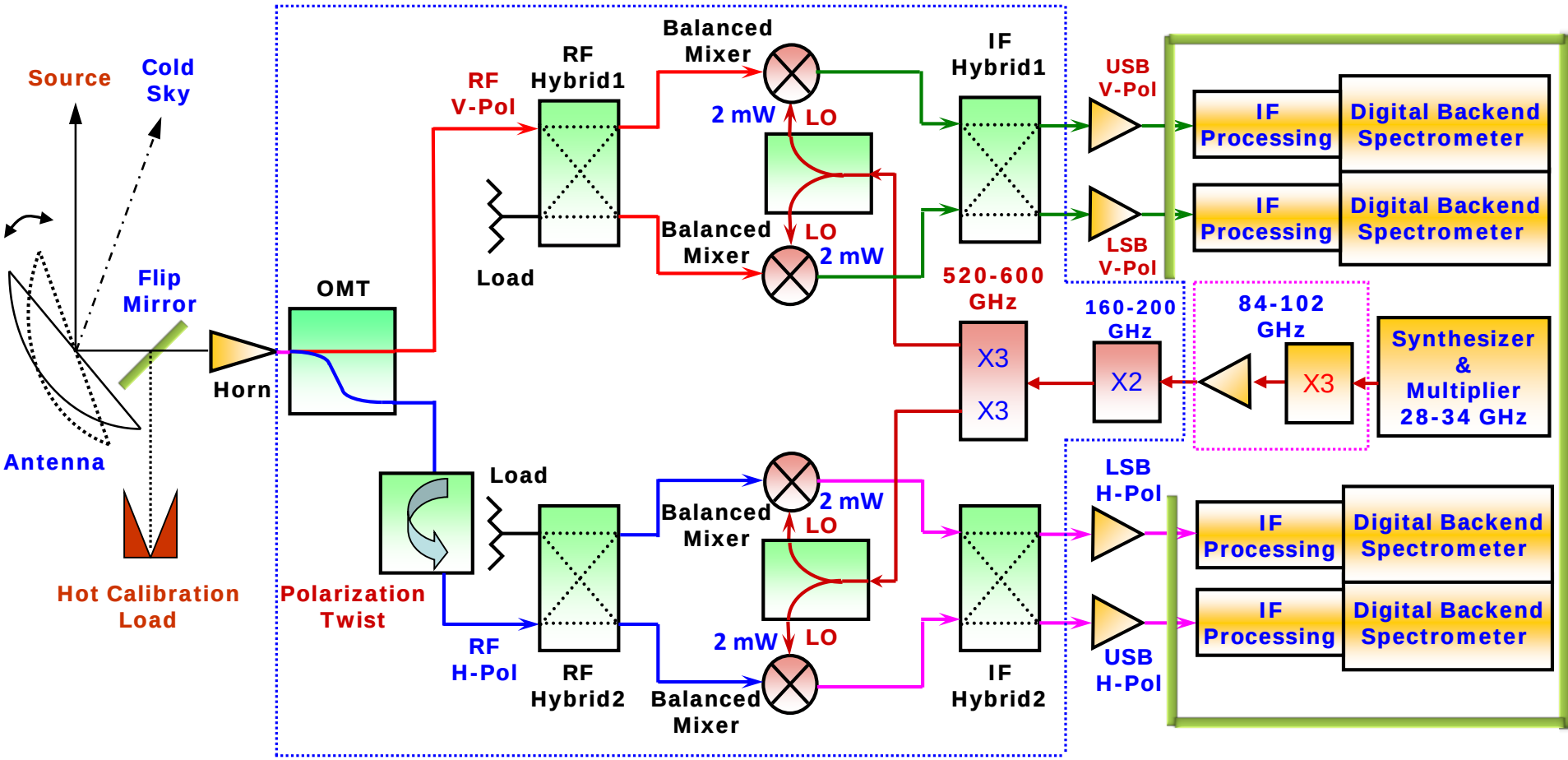

Vertical Integration of Components

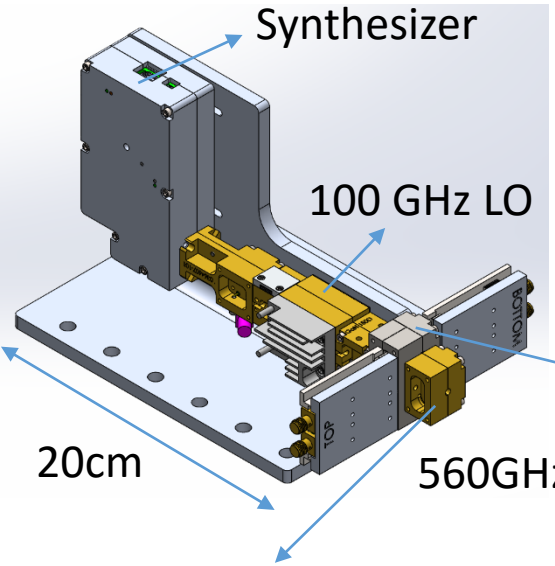

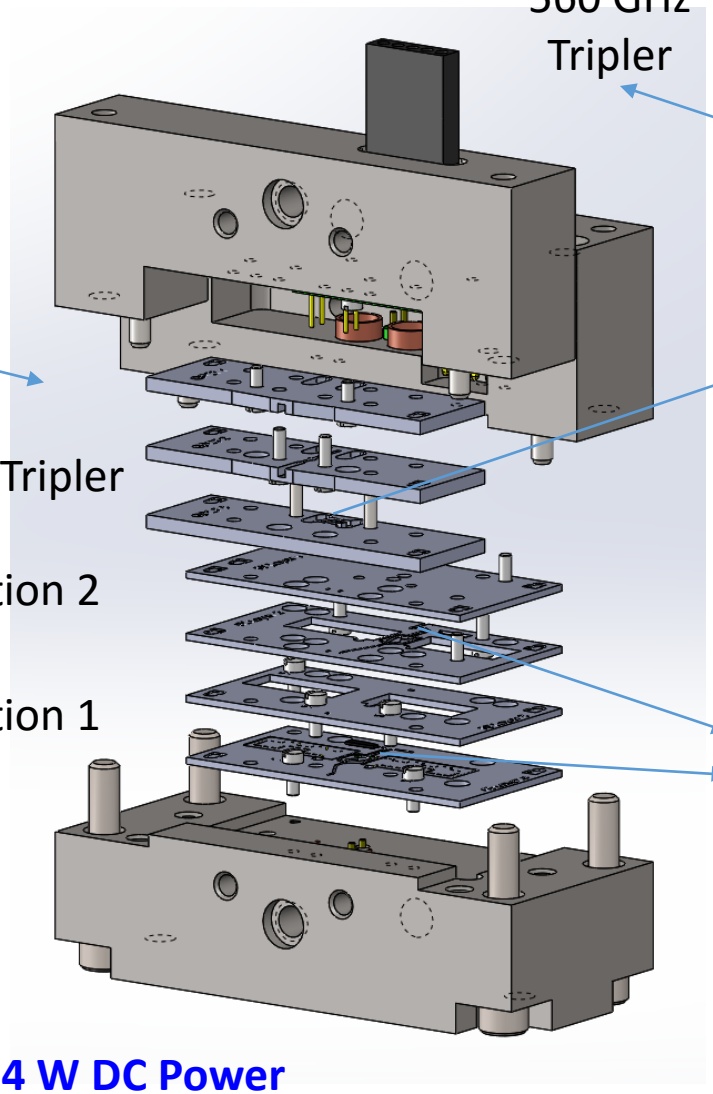

560 GHz
Tripler

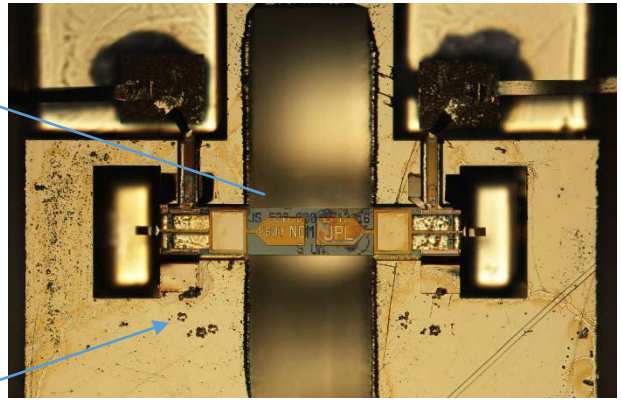

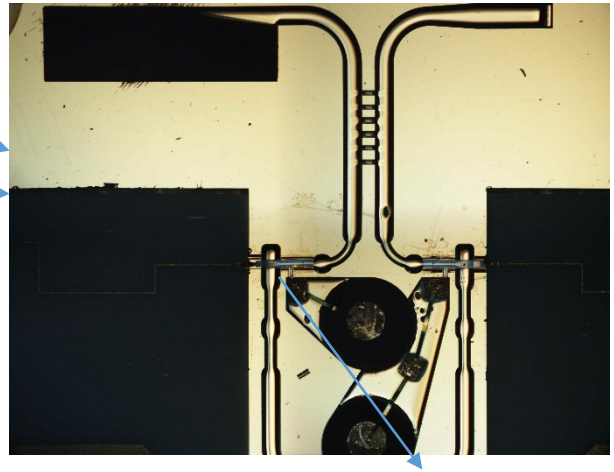

Mixers

20x15x10 cm^3 package, 14 W DC Power

Receiver Integration

- **Waveguide structures are fabricated on silicon wafers and coated with gold.**
- **They are vertically stacked**

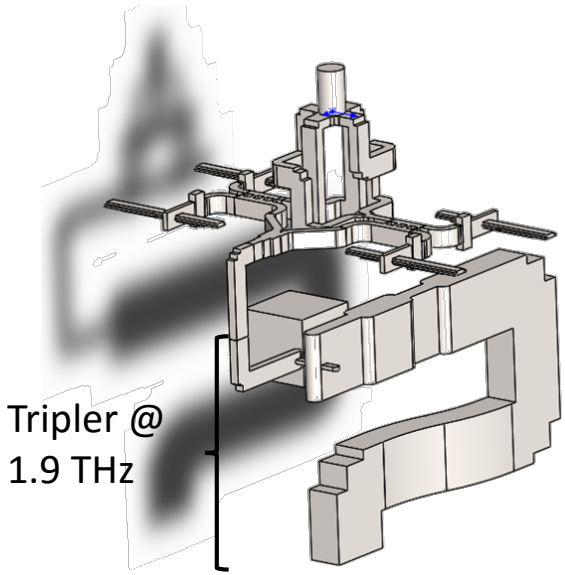

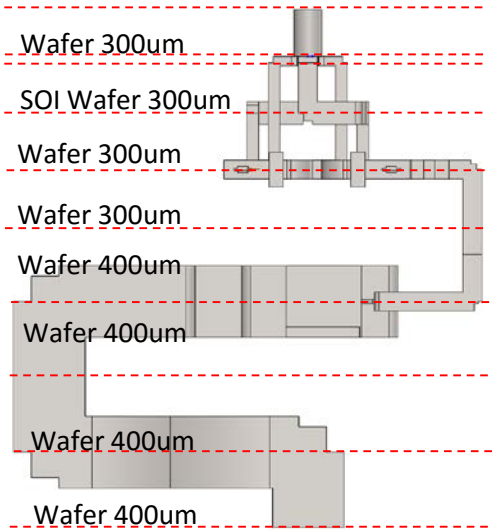

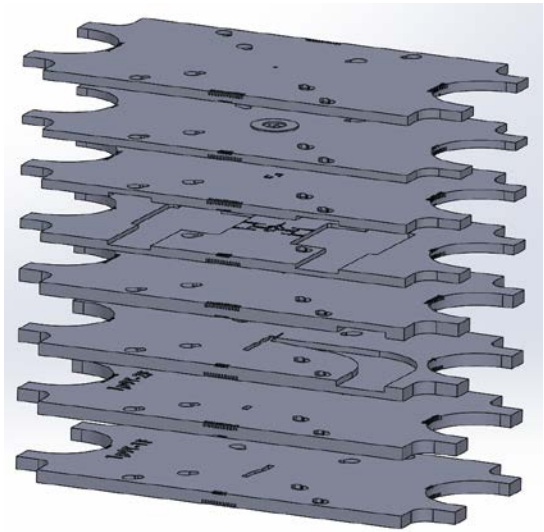

Silicon Micromachining

Silicon Micromachining

- Etch silicon wafer with plasma using a photolithographic pattern

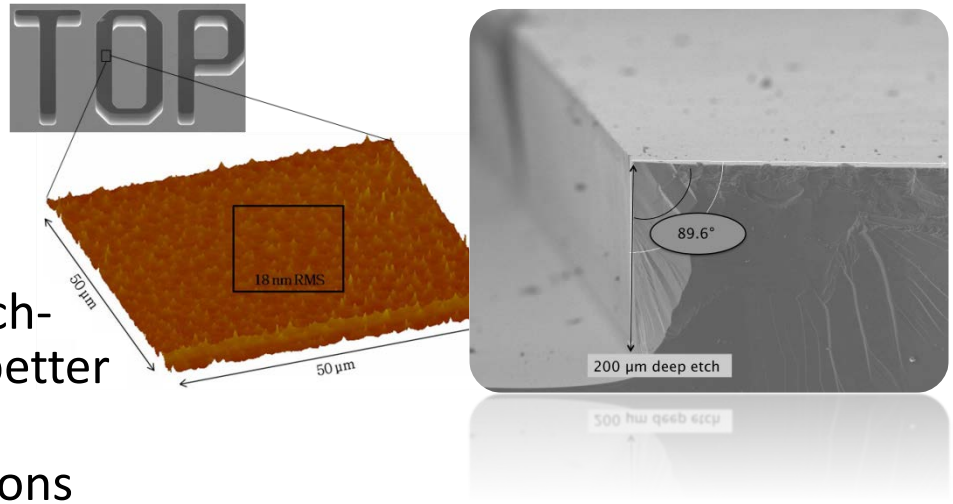

Advantages:

- Potential for lower cost because of batch-processed device fabrication, yielding better uniformity too.
- Lithographically precise feature definitions
- Integration of bias & IF lines on silicon itself. Future potential for integrated CMOS silicon devices.
- Potential for higher density 2D transceiver arrays.

Disadvantages:

- Immature technology: need for process development: **Not anymore!**
- **Challenge of wafer alignment.**

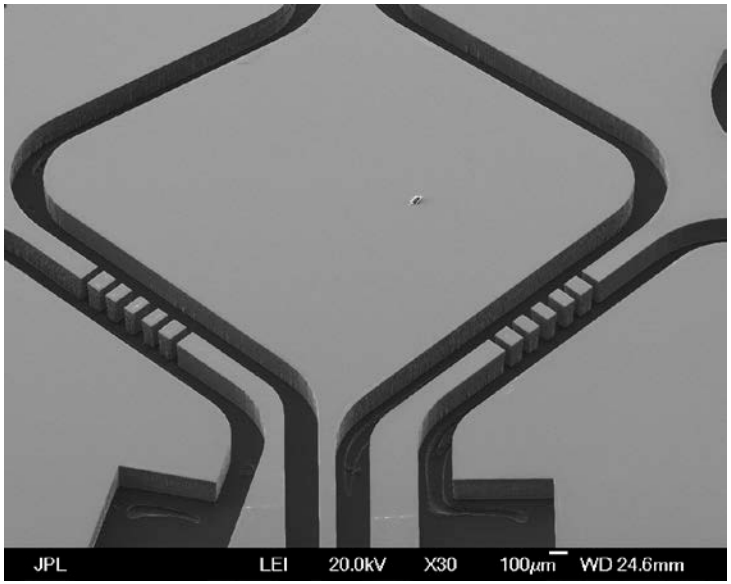

Deep Reactive Ion Etching (DRIE)

- Use of optimized **Bosch process** to etch Silicon using SF_6 and C_4F_8 plasma.
- Use of **SiO_2 as hard mask** (selectivity of **150:1**) to etch Silicon

Oxide pre-etch process

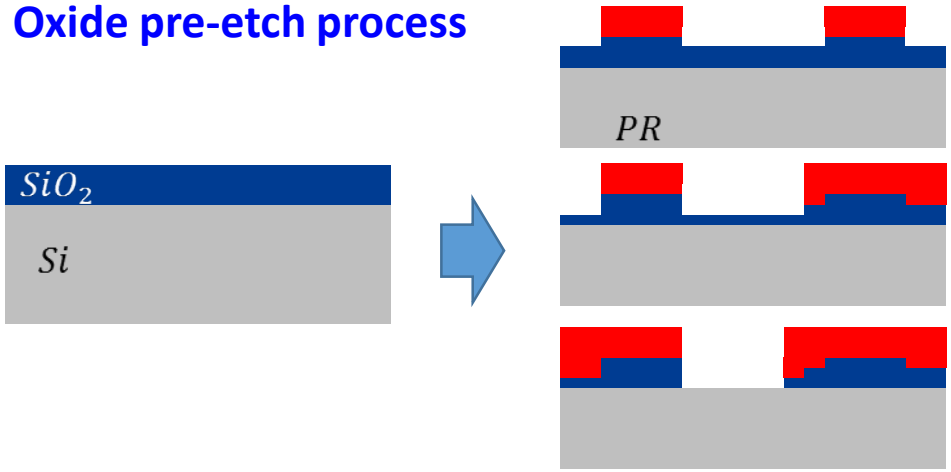

- Use photoresist to do SiO2 patterning
- **Etching of the differential pattern** to ensure precise control
- Etching using Inductive Coupled Plasma (ICP) process, etch rate: 70nm/min.

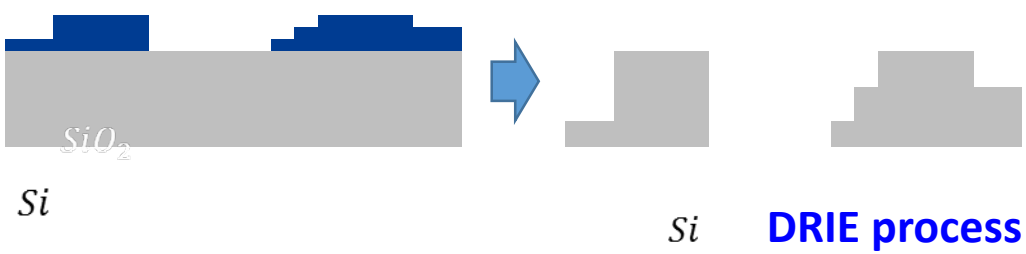

DRIE process

- DRIE process to etch the silicon, with oxide as the sole mask. **NO photoresist.**

Silicon Micromachining

Effect of Etch Roughness

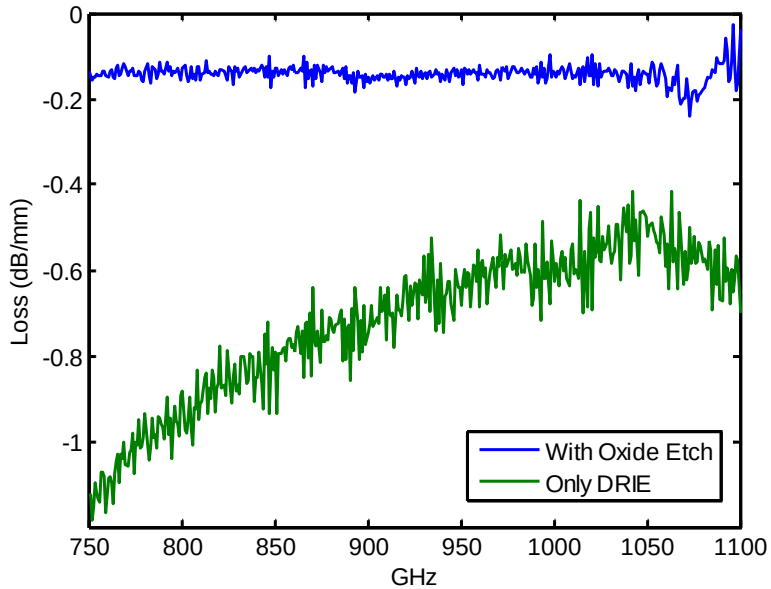

Waveguide Loss: Thru Lines

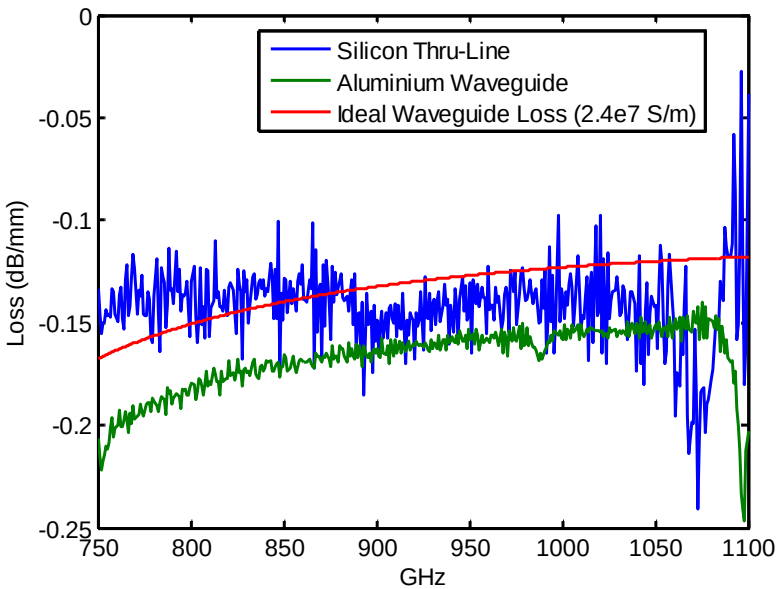

- Roughness from the DRIE process results in a roughness of 335nm—too high for these frequencies
- 2um of thermal oxide grown over wafer (1um into and 1um added to wafer)
- Oxide removed with wet etching
- **Process smooth rough features since oxide will penetrate peaks more than valleys**

Deep Reactive Ion Etching (DRIE)

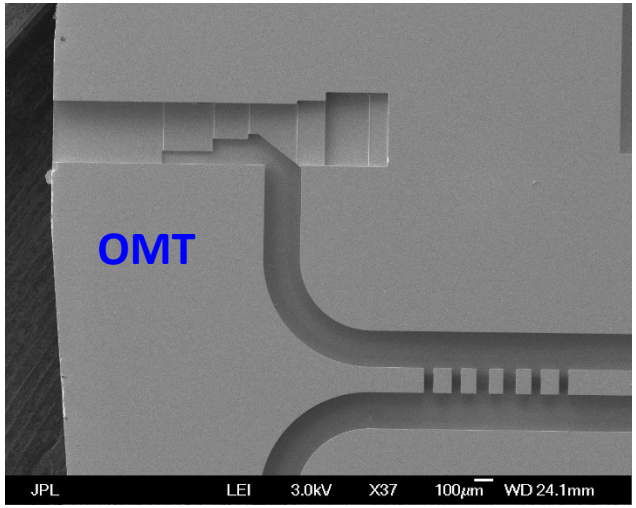

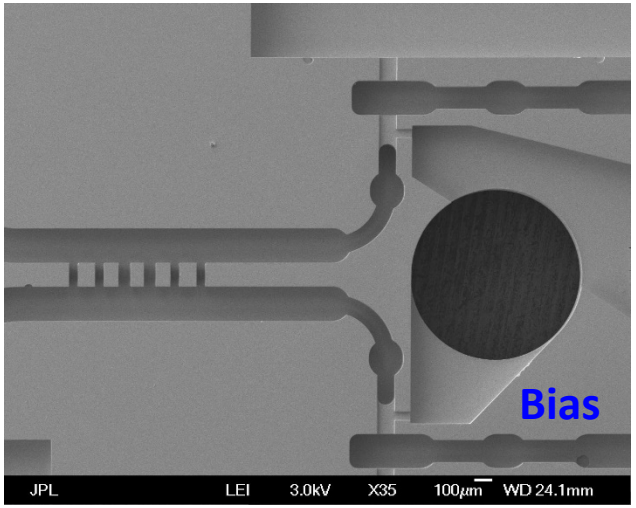

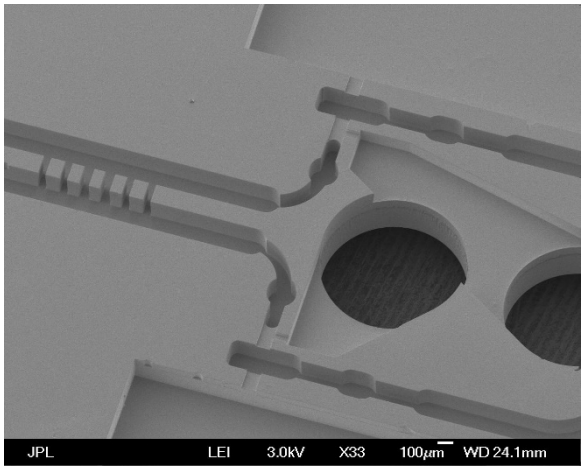

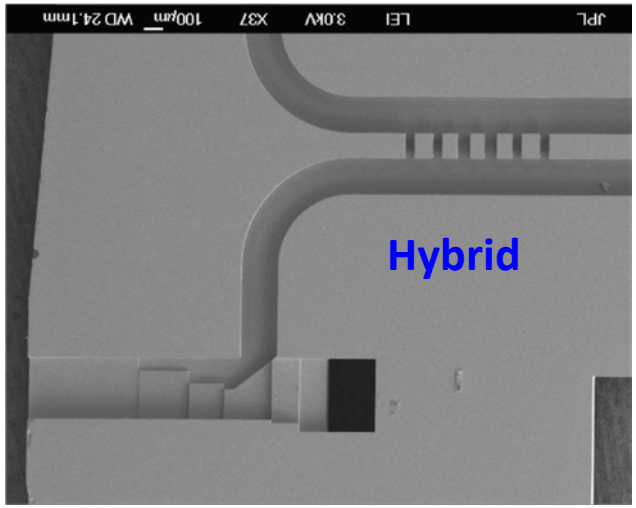

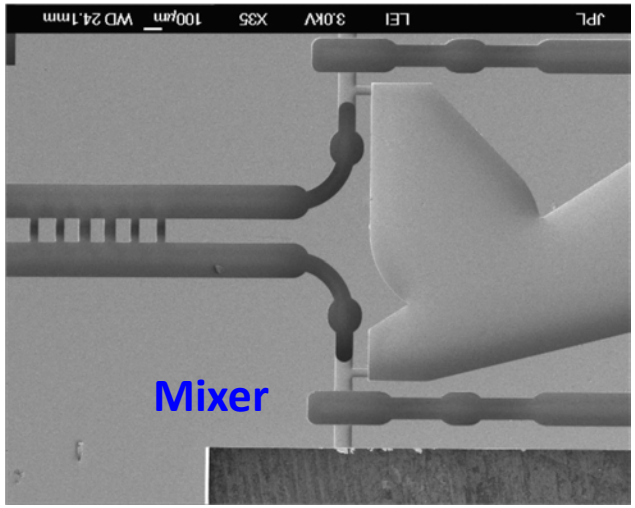

Different silicon micromachined layers before gold deposition.

Alignment of Micromachined Wafers

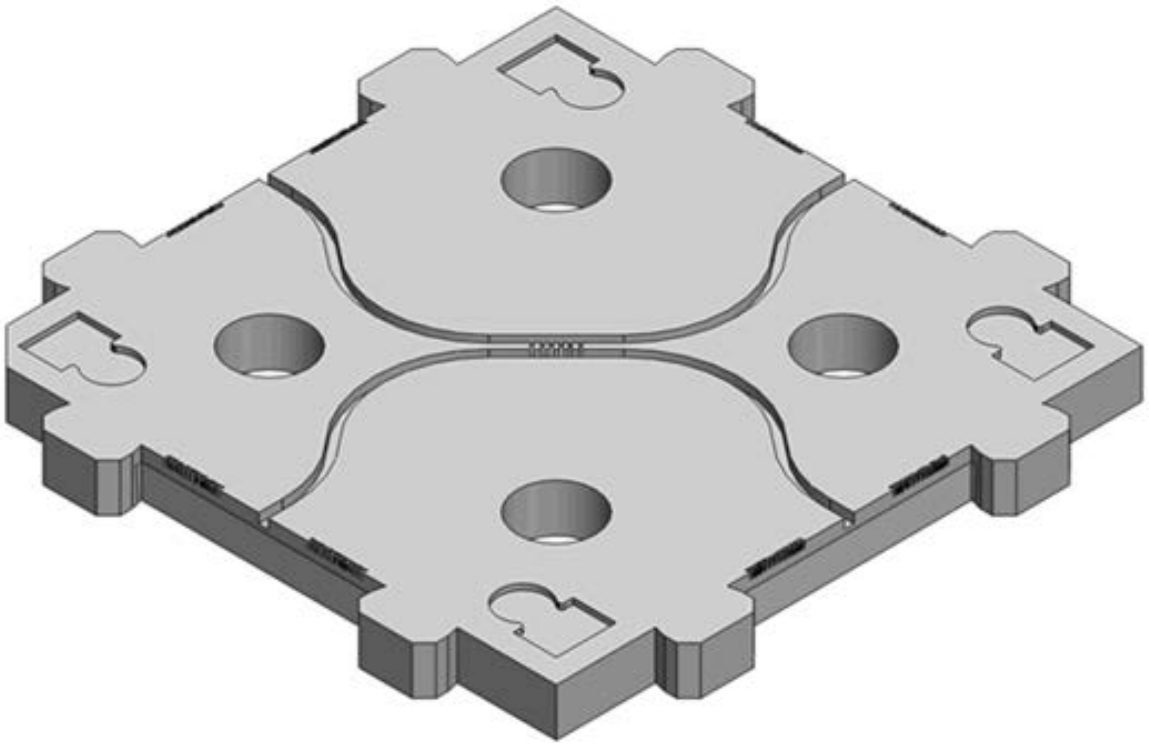

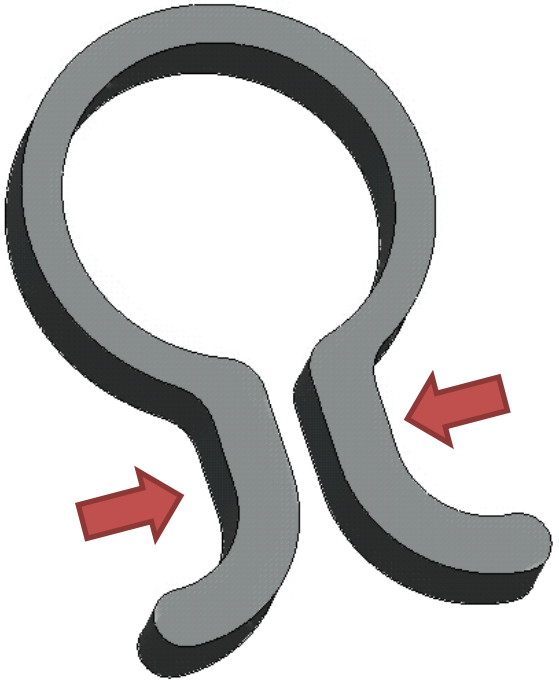

Alignment of Micromachined Wafers

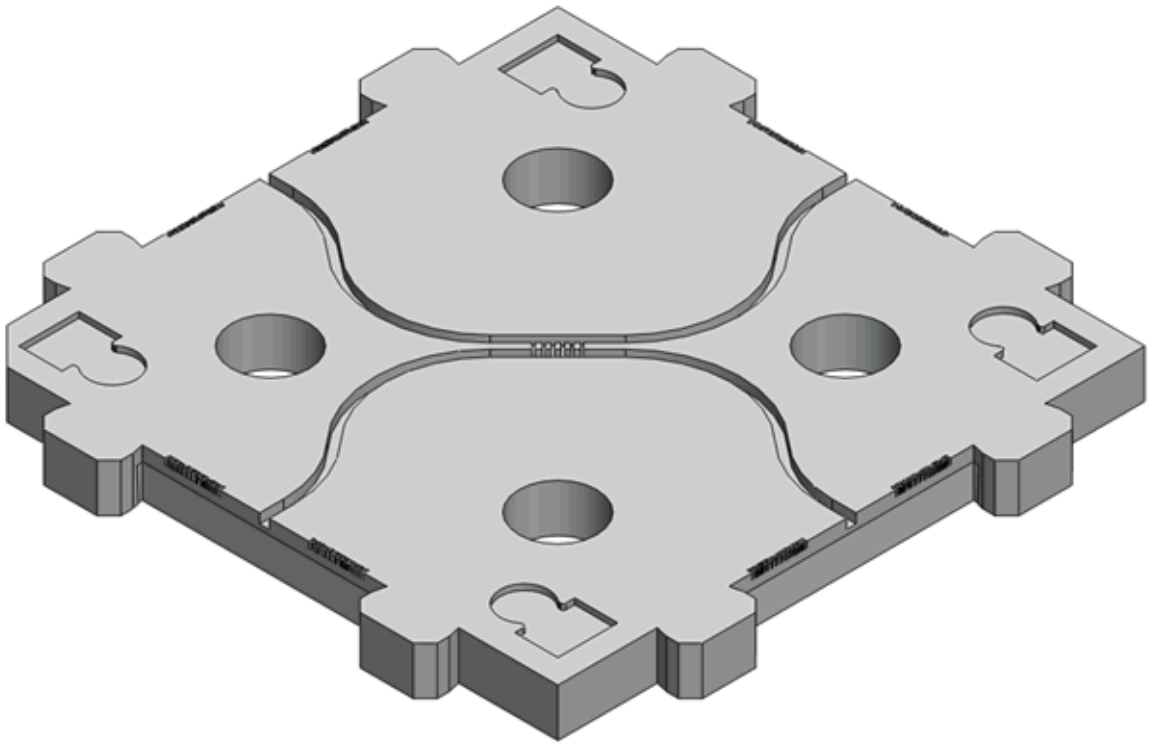

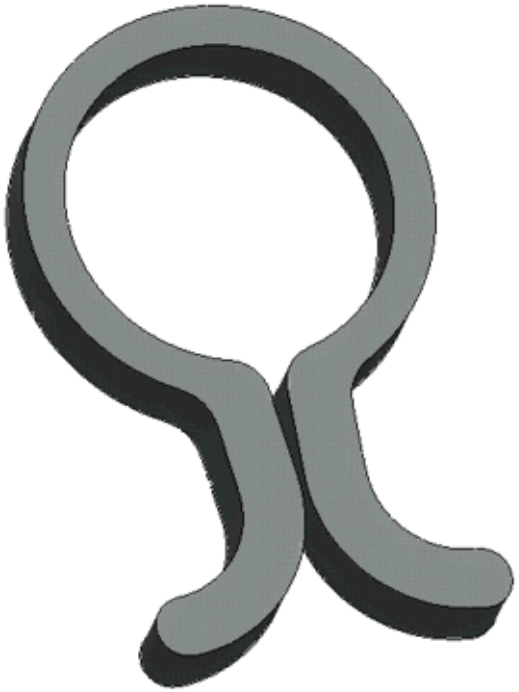

Alignment of Micromachined Wafers

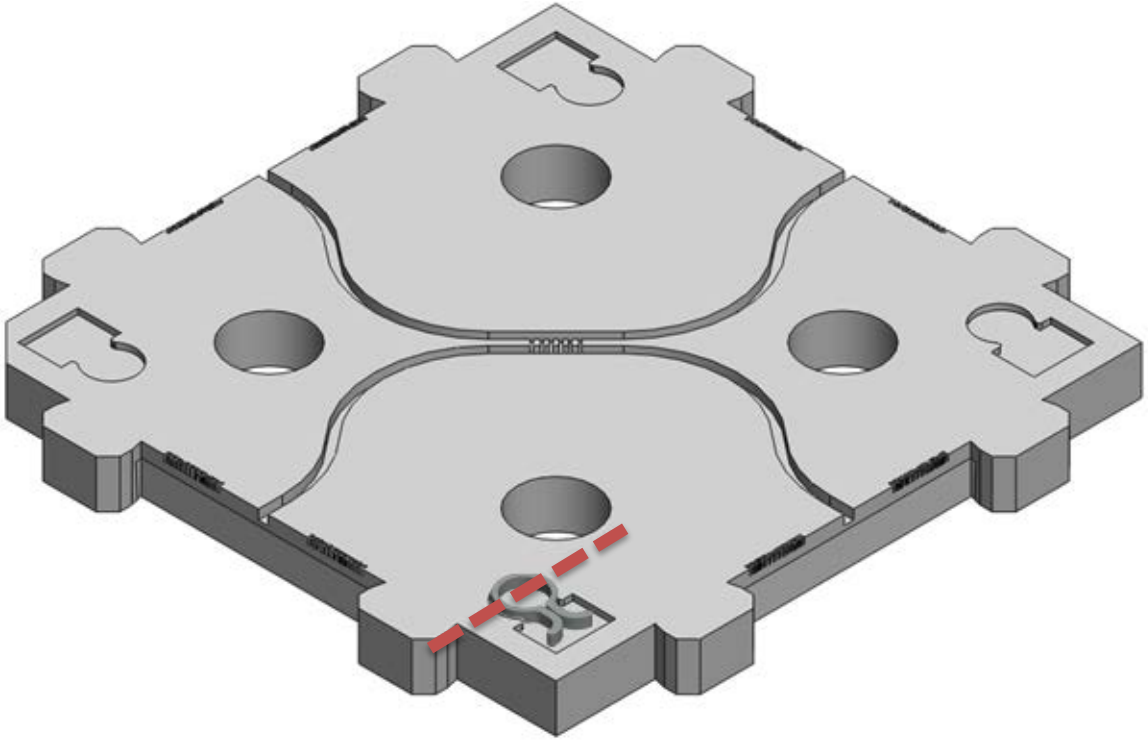

Alignment of Micromachined Wafers

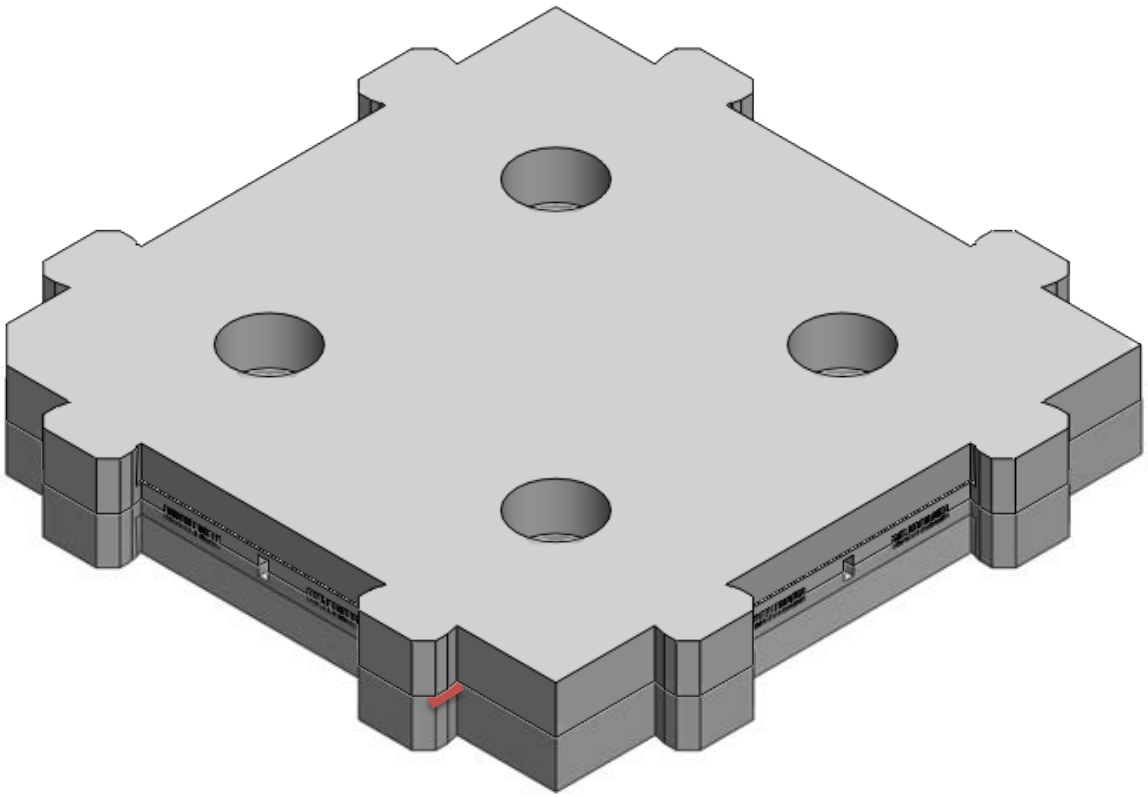

Silicon Vertical Assembly at 1.9 THz

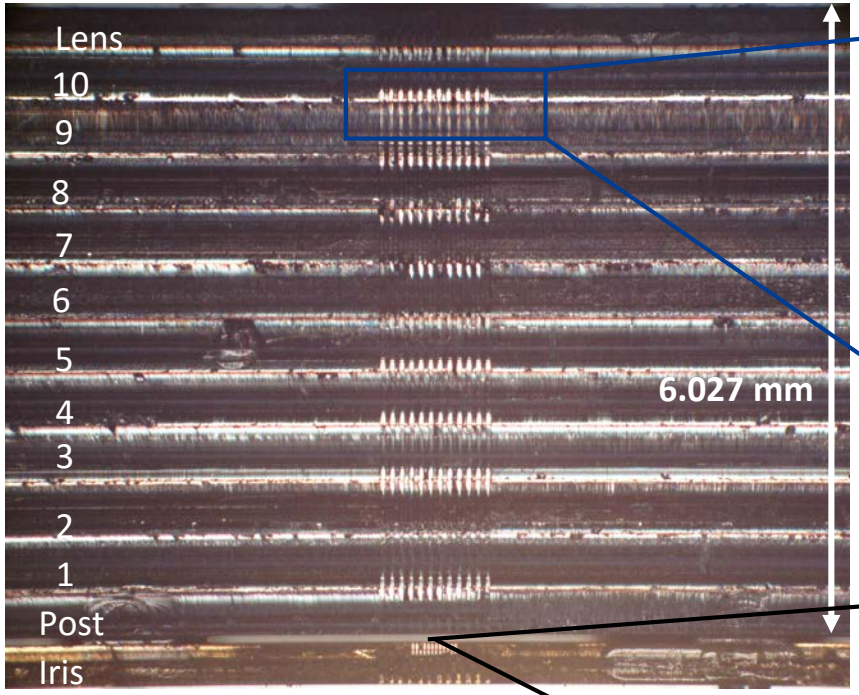

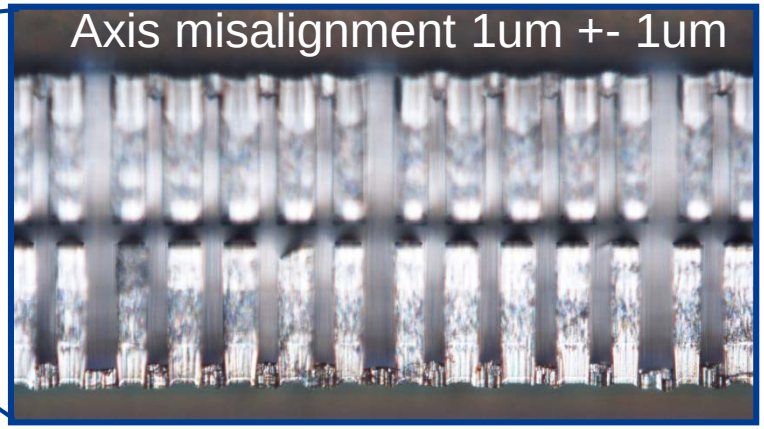

SEM of 1.9THz Iris

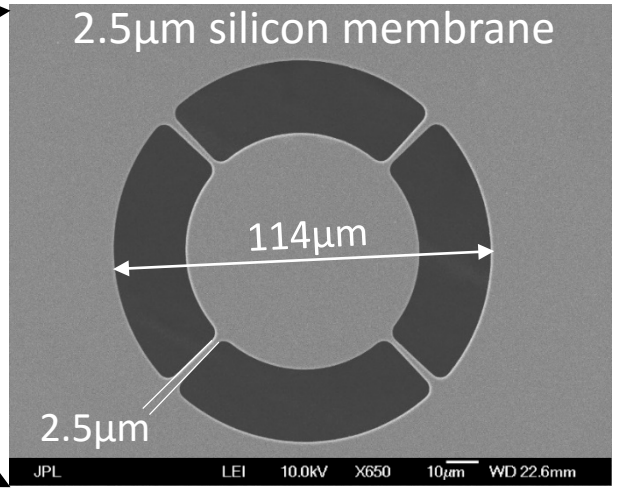

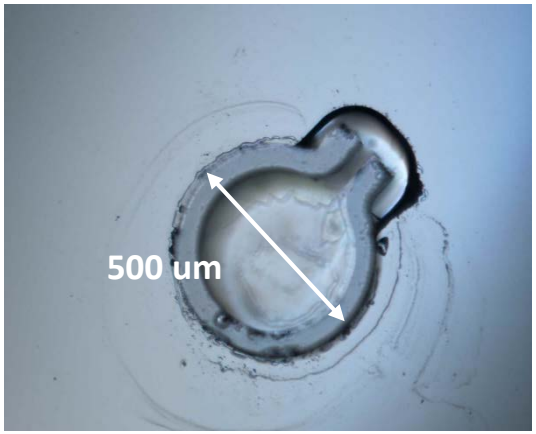

Alignment better than 1um!

Assembly of 1.9 THz Silicon Micro-lens

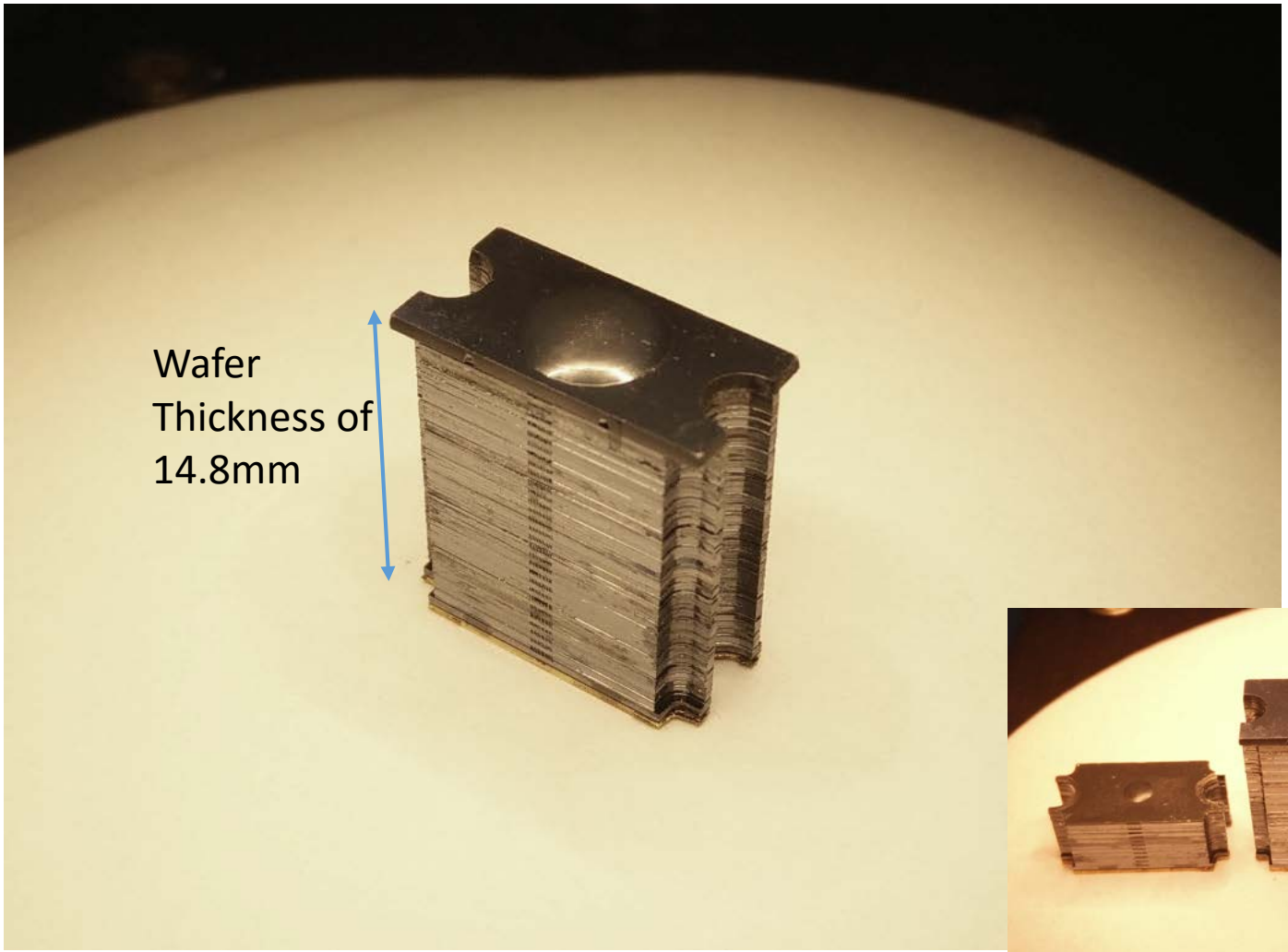

29 Wafers Assembled!

(Including Lens, Iris and Posts)

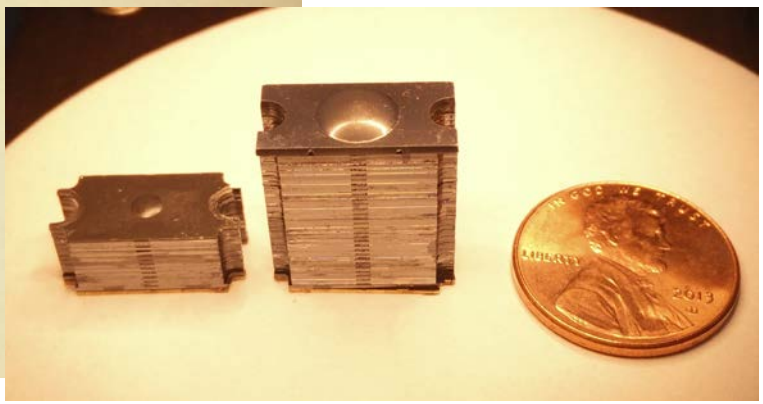

560 GHz Frequency Tripler

Quad On Chip Design

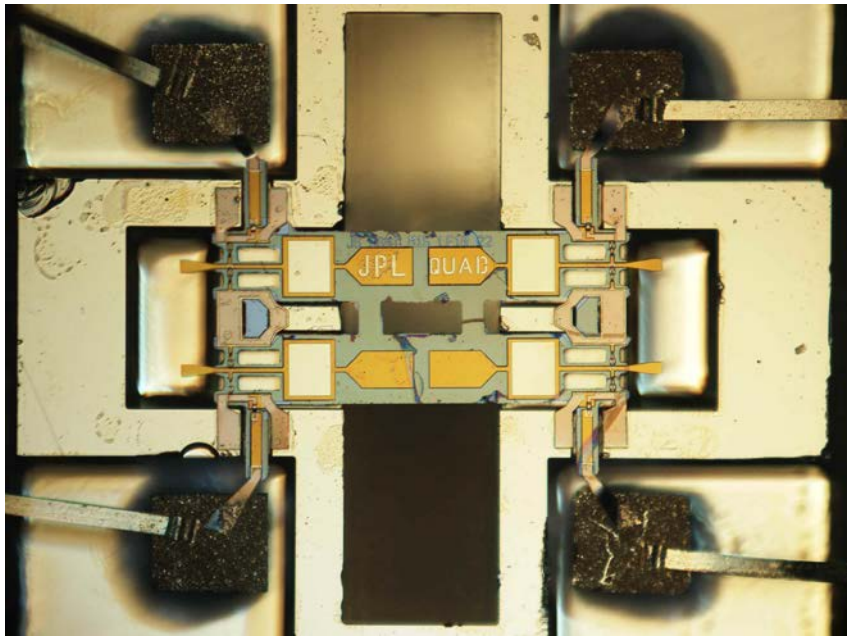

Optimized for 200 mW Input power

Dual On Chip Design

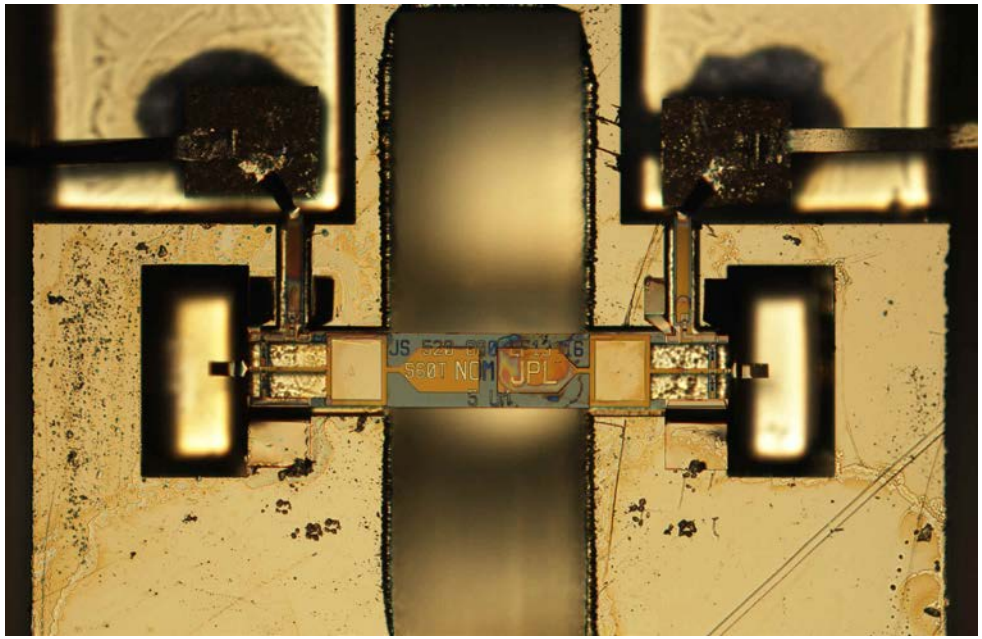

Optimized for 100 mW Input power

1.9 THz Source with Micro-Lens Antenna

1.9 THz Transmitter Front End Expanded View

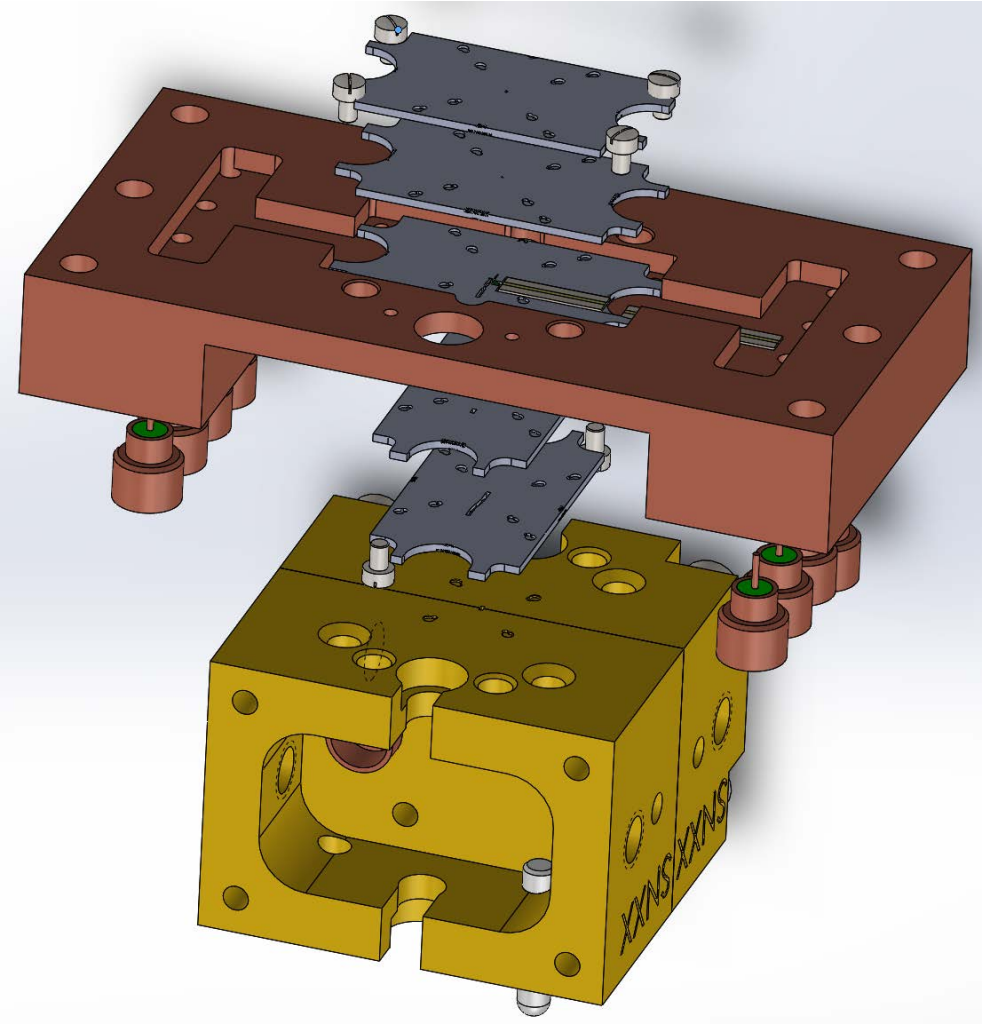

1.9 THz Transmitter Front End with Antenna

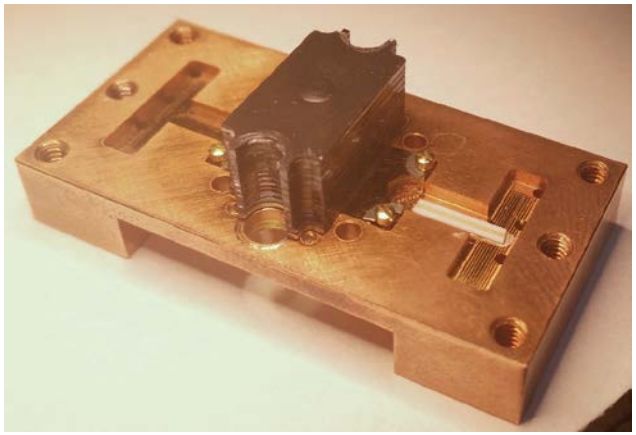

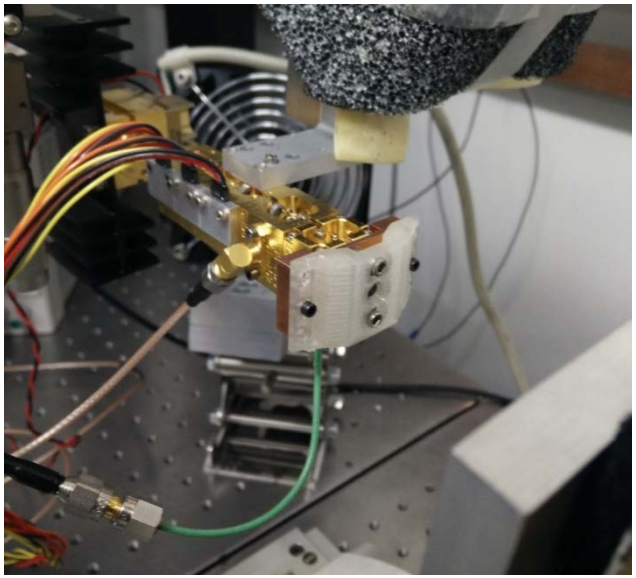

Measured Radiation Pattern

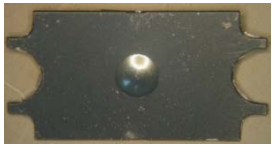

1.9 THz

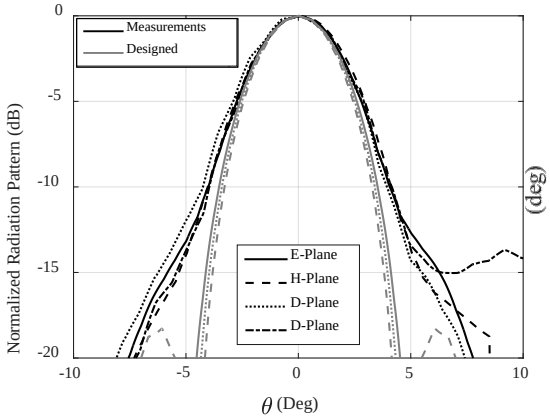

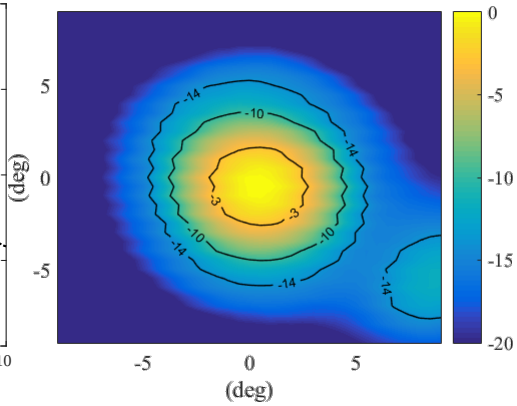

1.97 THz

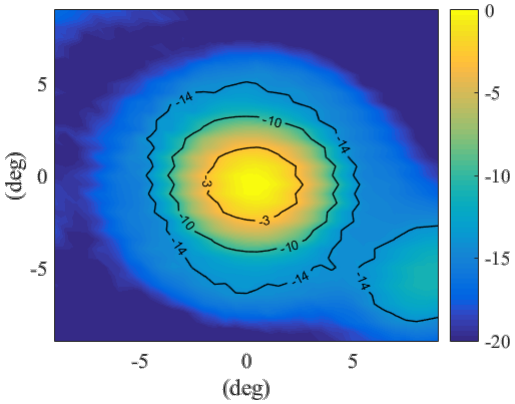

Measured Directivity = 32.29 dB
Designed Directivity = 33.83 dB

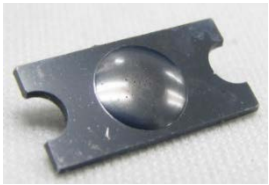

1.9 THz

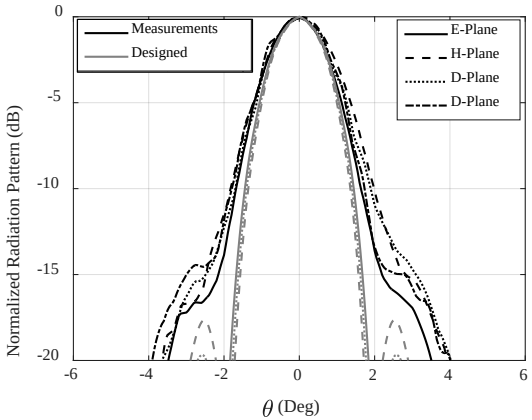

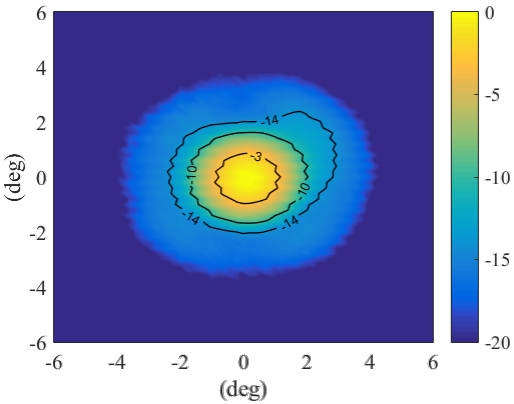

1.98 THz

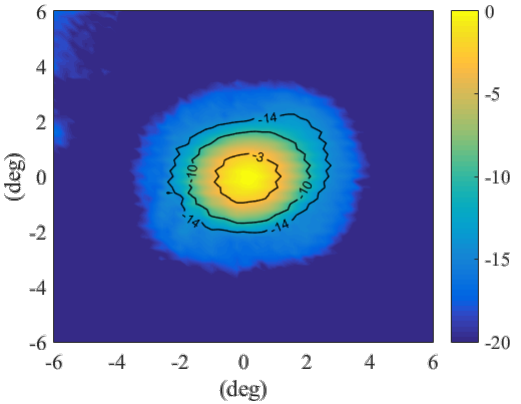

Measured Directivity = 39.21 dB
Designed Directivity = 41.66 dB

Silicon Micromachined Radar Front-End

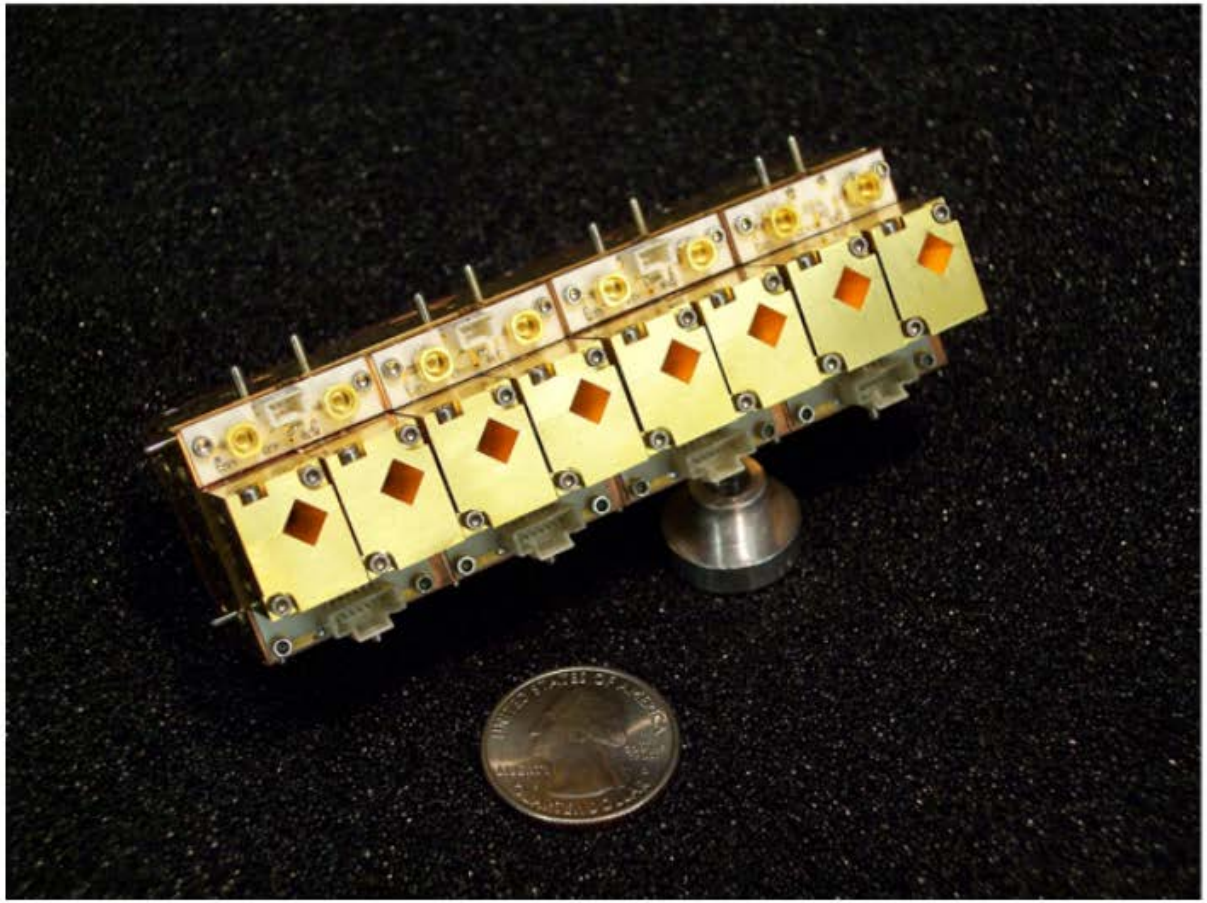

handgun,
outside pocket of
leather jacket

handgun,
inside pocket of
leather jacket

8-Pixel Fully Functional 340 GHz Imaging Radar System

Summary

- Packaging is a challenge at millimeter-wavelengths
- It gets much harder at terahertz frequencies.
- Silicon micromachined waveguide based packaging seems to be a practical solution.

This work was carried out at the Jet Propulsion Laboratory, California Institute of Technology, under a contract with National Aeronautics and Space Administration.