Compact piezoelectric resonance mass balance for sample verification and mass quantification and mixing.

Stewart Sherrit, Hyeong Jae Lee, Aaron C Noell, Gene B Merewether, Christopher R Yahnker
Jet Propulsion Laboratory, California Institute of Technology, (MS 67-119), 4800 Oak Grove Drive Pasadena, CA, 91109-8099, email:ssherrit@jpl.nasa.gov

Abstract – There is a need for sample verification and mass quantification of rock, soil and/or ice obtained by sample acquisition mechanisms on extraterrestrial bodies. For many scientific instruments information about the mass of the sample would aid in the interpretation of the data and help prevent the portioning system from overloading instrument ports. Additionally, on a potential sample return mission it is likely that a sample confirmation or mass determination requirement would be implemented before the spacecraft would be commanded to return to Earth or Lunar orbit. In an effort to meet these potential requirements, a piezoelectric resonance balance is being developed to measure a frequency change proportional to the sample mass change. In previous work[1] we developed a resonance balance which produced large non-linear frequency changes due to the addition of a large mass. In this study we have looked at a variety of resonator geometries in an effort to linearize the frequency shift with mass. In addition, we have investigated the use of oscillator/counter circuitry to track the frequency shift of the piezoelectric mass balance. In this new design the frequency shifts automatically when a mass is placed on the balance and the counter circuit calculates the frequency shift. This frequency is then converted to a mass using calibration tables determined previously. An additional feature we have implemented is the use of a high frequency thickness mode piezoelectric resonator to mix the sample and a reactant or solvent. This allows for measuring both sample and reagent prior to ingestion by the instrument. This paper will focus on the design requirements and how they are affected by the local gravity and acoustic properties of the sample. Designs which allow for easy loading and unloading of the balance will also be discussed.

Keywords: Piezoelectric, mass balance, resonance, flextensional, cantilever, ultrasonic mixing, portioning

1. INTRODUCTION

A variety of NASA missions have been proposed for sample return from planetary bodies including moons[2,3], comets[4], asteroids[5] and planets[6]. For these proposed missions, a method to assess the captured sample size is required to determine if a suitable amount of sample was acquired or if there is a need to continue to attempt to acquire sample. Many instruments also would benefit from information about the mass of the sample to aid in the interpretation of the data. Lastly, portioning or sample-handling systems might require an accurate sizing of the sample mass before dispensing the sample to an in-situ instrument. The main properties considered in developing a mass measuring system are the sample size, homogeneity, integrity, and the local gravity. A variety of direct and indirect measurement methods investigated by studying terrestrial mass/sample measurement systems are shown in Table 1, some of which were presented earlier[1]. Other recently investigated sample verification techniques include studies of differential spacecraft dynamics[7], deformation of a capacitance membrane[8] and optical verification[9]. If the sampled material is known, and its density and integrity are fixed, one could devise a variety of indirect measurements to determine the sample mass/volume. These indirect methods include capacitance/resistance level sensors, ultrasonic level sensors, and beta gauges for unconsolidated material, and contact sensors/pistons or optical sensors for consolidated materials (e.g., cores). The major disadvantage of these approaches are that the material properties, including the porosity and particle size, need to be known (or determined independently) to produce confidence in the measurement accuracy. Unfortunately, in many cases the exact composition of an extraterrestrial sample and the porosity are unknown prior to sampling. In an effort to establish a reliable mass measurement method, we have investigated sample mass measuring systems for unknown samples that are applicable to space environments. An example of a challenging sampling scenario for a mass measuring instrument design is a touch and go sampler on an asteroid or comet which produces an unconsolidated sample. In this case, due to the miniscule local gravity, a direct measurement of mass would require the spacecraft to produce an acceleration a leading to a measureable force $F = m_s a$, where m_s is the sample mass. The most direct solution would be to have the sample canister compress a spring under a gravitation field or acceleration measured using a strain gauge. However, in a microgravity environment, or using a spacecraft induced acceleration, the force produced by a reasonable sample size (< 1kg) is of the order of a milli-Newton at full scale which is the equivalent of <0.1 g. at full scale on Earth. Typical mass scales on Earth that accurately measure sub gram mass values require clean, level, low vibration and shock isolation environments, which, if

required of the spacecraft, would place many challenging constraints on the flight system in order to demonstrate that the system would survive random vibration and other environmental conditions during launch. Additionally, the sample mass in this case would have to be a small fraction of the potential container mass, significantly reducing the measurement sensitivity.

Table 1: Various methods of measuring or inferring mass capture

Method	Direct/ Indirect/ Inferred	Relationship	Contact/ Non-Contact	Advantages/Disadvantages
Force sensor Spring & Strain gauge	Direct	$F=ma=kx$ $m \propto x$	Contact	Depends on a or g. In milli g environment need to have soft springs. Sensor system is strain gage on spring.
Force sensor Spring & Strain sensor	Direct	$F=ma=kx$ $m \propto x$	Non-Contact	Depends on a or g. In milli g environment need to have soft springs. Sensor system could be Capacitive, fiber optic, Eddy current, lvdt's, interferometer etc.
Capacitance/ level meter	Indirect	$C = \varepsilon A(x)/t$ Concentric $m \propto x$	Contact	Depends highly on material property ε and porosity and homogeneity
Ultrasonic/ level meter	Indirect	$x = 2v\Delta t$ Concentric $m \propto x$	Contact	Depends highly on material property v and porosity and homogeneity
Radiation/Attenuation Gamma, beta, optical	Scattering – Indirect;- Surface Attenuation –Direct; Volume	$I=I_o\exp(-kx)$ $m \propto f(k)$	Non-Contact	Sample homogeneity, sensor complexity and mass
Piezoelectric force sensor	Direct	$F=ma=kV$ $m \propto V$ or $\Delta m \propto \Delta f$ for resonator	Contact	Two methods of measurement. (Voltage sensitivity and time constant issues.) Frequency is easy to measure accurately. (low frequency resonator required)
Space craft dynamics	Indirect	Mass is determined from changes in the spacecraft dynamics from known perturbations	Non-Contact	Concept is theoretically complex however may not require additional hardware.
Fiber Optic imaging	Inferred	Estimate is bounded by the field of view	Non-Contact	Concept is simple but non-linear. Also suffers from potential saturation at low fill volumes.
Actuation of Plate To compress sample	Inferred	Estimate is bounded by the density and compressibility	Contact	Concept is simple but suffers from potential dependence on sample geometry and connectivity across plates.
Mechanically weak conductive array	Inferred	Volume Estimate is bounded wire spacing.	Contact	Concept is simple but suffers from unknown geometry and size of consolidated sample and capability of sample to break wire.

Previously we reported a mass measurement device that uses piezoelectrics actuators to fluidize a powder sample and enables two methods of mass measurement[1]. In this paper, we present a novel mechanism using the resonance measurement of the mass of sample on an inlet to an instrument on a spacecraft (example - unconsolidated sample collected from scoop or brush wheel sampler, liquid, powder, pebbles etc). A piezoelectric balance can be designed to measure mass directly by monitoring the resonance frequency change, which is proportional to the mass change. This paper describes the development of a linear resonance balance (mass shift proportional to frequency shift) where, the sample chamber can be used to re-measure the total mass of the mixture after the addition of reagent/solvent. The piezoelectric actuator/balance or another higher frequency piezoelectric thickness mode transducer driven at higher amplitudes create circulation patterns in the mixture and mixes the components. In addition, if the mixture is powder, the measuring actuators can be driven at higher voltages to fluidize the powder to aid sample movement. This technology is applicable to a wide variety of instruments where a knowledge of the mass of the sample and of the solvents/reactants would aid in the utility/accuracy of the information derived from the instrument. The advantages of these additional features include; a solid state resonance balance system, a linear mass measurement with frequency, light weight, and low power. In addition the balance can be designed to assist in the movement of sample in and out of a measuring chamber and measure the mass of added reagents or solvents.

2. LINEAR RESONANCE BALANCE DESIGN

A simplified schematic of the mass measuring system is shown in Figure 1, where a piezoelectric actuator or many piezoelectric actuators are placed between the collection plate of the sampling system and a support structure. As mass is added to the plate, the change in mass produces a change in the resonance frequency of the piezoelectric actuator/resonator with Δf proportional to Δm (for small Δm). In a microgravity environment a spacecraft could be accelerated to force the mass onto the plate producing a shift in the resonance frequency with the change in frequency related to the mass of the sample. In order to linearize the resonance shift, the resonance frequency of the resonator was reduced such that the maximum mass to be measured shifts the resonance frequency by less than 10%.

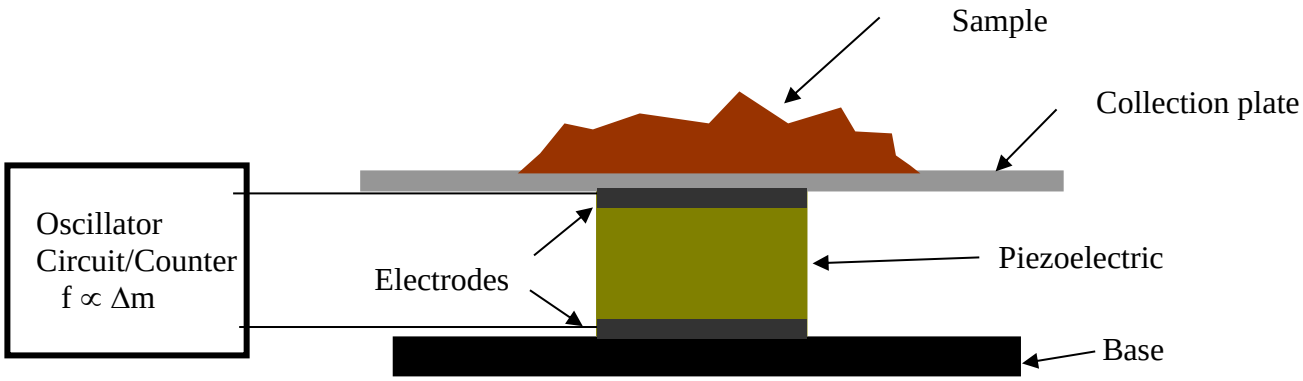

FIGURE 1: Resonance method of measuring mass. A Sample is loaded onto a plate and the mass of the sample loads the piezoelectric causing the resonance frequency of the piezoelectric and plate to decrease. The decrease in frequency for small mass is proportional to the mass.

Various designs were tested to determine the resonance frequency and the mass sensitivity. A design based on a piezoelectric driven cantilever is shown in Figure 2. This frequency shift of this design as a function of the mass was found to be dependent on the position of the mass on the cantilever. One approach would have been to have the sample cup mounted to the beam at a fixed location rather than being part of the beam. We stopped pursuing this approach due to the positive initial results of other designs. Another balance based on the original flextensional design is shown in Figure 2. Finite element analysis studies of this actuator and various cup materials shown in Figure 3 indicate that the sensitivity to mass change is larger for the lower density cup materials. A prototype with an aluminum cup was built based on the analysis; the photographs in Figure 4 show the mass measurement after the calibration with the data shown in Figure 5. The parameters from the free fixed resonator can be used to model the resonance. The flextensional amplification and distributed mass requires a mass factor that can be determined from fitting the data. It can be shown using the circuit that

the functional form of the relationship between the resonance frequency and the mass is m=-af+b (for small mass levels m < 10 g which produces < 10% change in the resonance frequency).

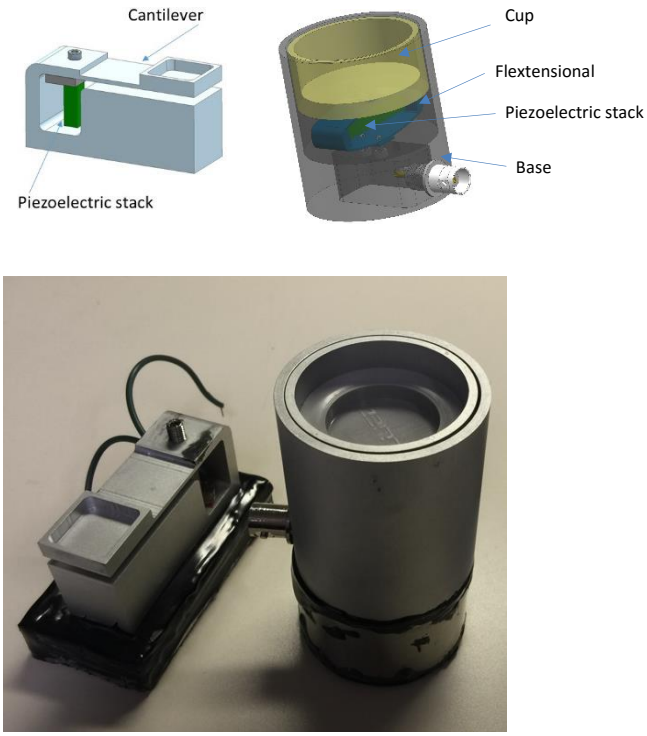

FIGURE 2: Various configurations of the resonance mass balance prototype that could incorporate mass measurement

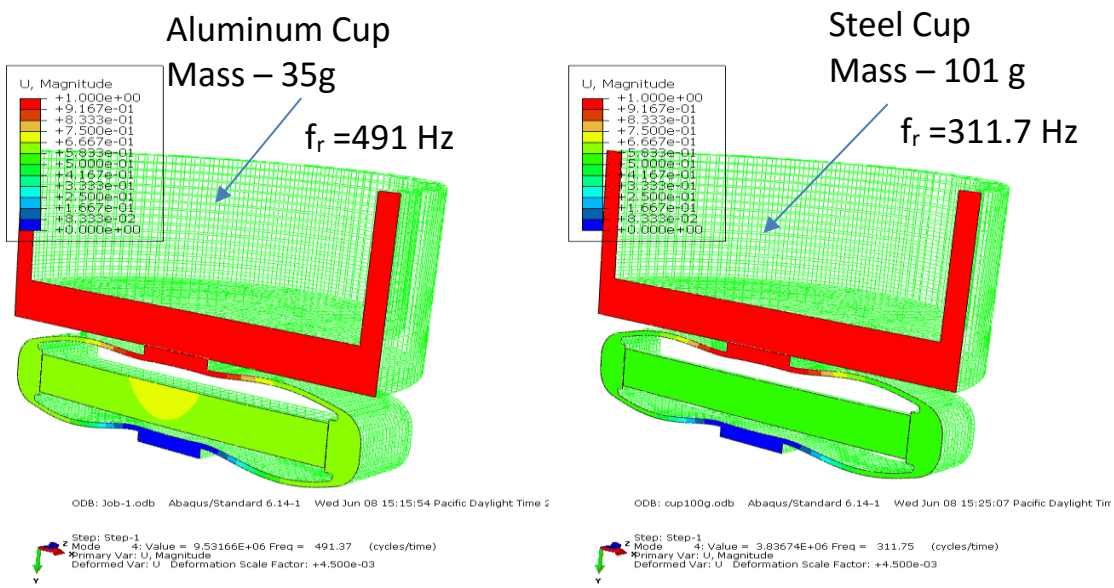

FIGURE 3: FEM studies using ABAQUS of the mode and resonance frequency as a function of the steel or aluminum cup material. The larger steel cup mass drops the resonance frequency of the flextensional to 311.7 Hz vs 491 Hz for the aluminum cup.

A resonator system (~0.38 kHz) designed as shown in Figure 3 and linear for up to 10 g of sample is shown in Figure 4. An ice sample was measured on a standard balance (4.42 g) and then tested on the resonance balance (4.47g). The error in the measurement is about 1.1%.

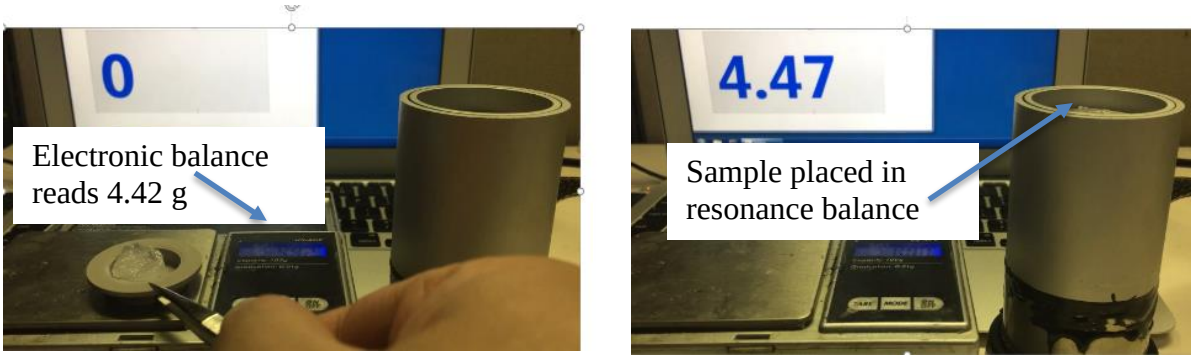

FIGURE 4: Resonance mass balance prototype with mixing based on a cup mounted to a low frequency flextensional actuator. The figure on the left shows the mass measurement on the electronic balance (4.42 g). The figure on the right shows the mass determined by the resonance balance (4.47 g). (Error for the measurement shown is 1.1%)

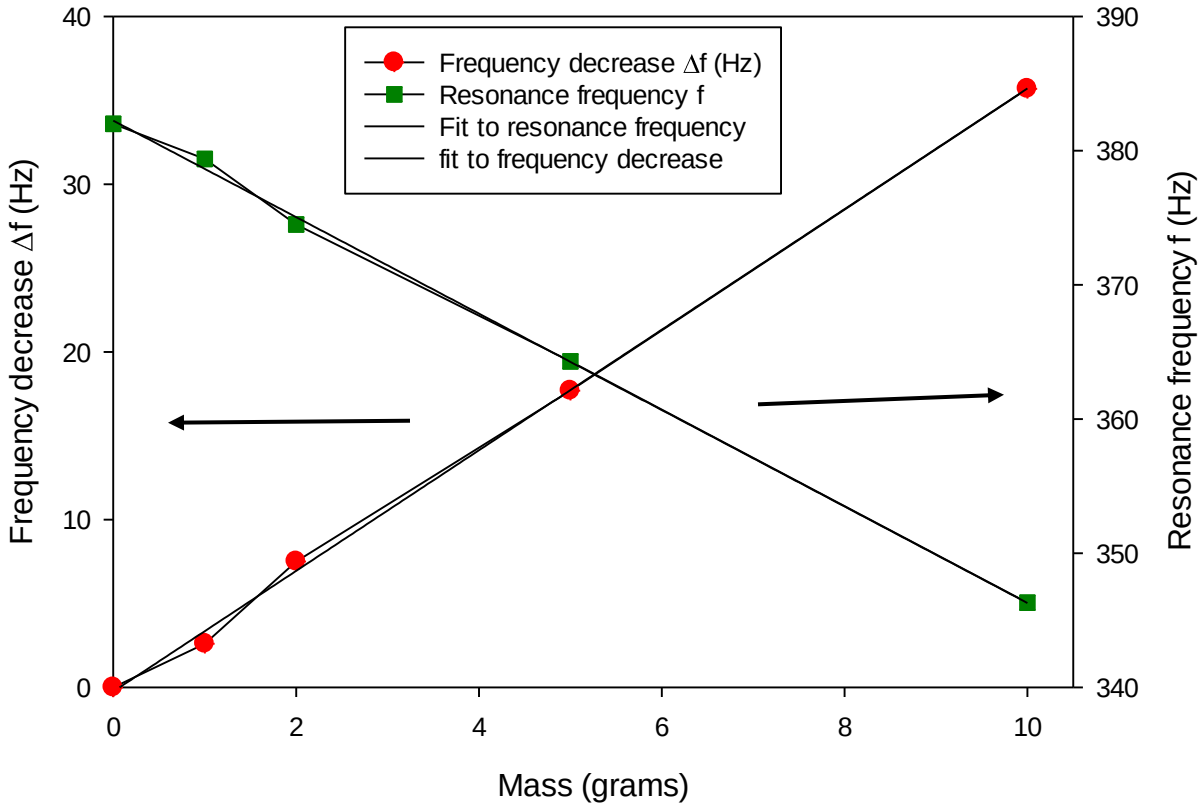

Figure 5. The frequency shifts as a function of the mass for the resonance balance are shown in Figure 4 with a fit to a line showing the linearity of the relationship.

The parameters from the free fixed flextensional resonator with a cup can be used to model the resonance. The flextensional amplification and distributed mass require a mass factor that can be determined from fitting the data. The mass versus frequency data for the flextensional cup balance is shown in Figure 5. It can be shown using network analysis

of the piezoelectric resonance that the functional form of the relationship between the resonance frequency and the mass is $f = b - a\Delta m$ (for small mass levels $\Delta m < 10$ g) that produce a 10% change in the resonance frequency.

It is apparent that the sensitivity can be increased by producing prototypes with lighter and softer actuators; however for a robust system there is a limit that is set by the noise floor of the electronics (drift, stability, noise etc.) and the mass of the measuring plate combined with the accelerations that the balance will experience in an unlocked position. In addition, softening the resonator can also increase the non-linear response. The sensitivity can also be increased by using lock-in technology and using a pulsed or non-constant acceleration (harmonic). There are two other considerations that need to be considered when designing a balance for autonomous measurement in a low gravity environment. One limitation is the maximum amplitude at which the mass balance can be driven. For a piezoelectric actuator driven at a set AC voltage, the amplitude of the displacement is ξ and the amplitude of the maximum velocity is $v = \xi\omega$, while the amplitude of the maximum acceleration is $a = \xi\omega^2$. If surface tension forces can be ignored and a exceeds the local gravitational acceleration g or spacecraft acceleration a_s normal to the cup surface then a portion of the sample may leave the cup and not be sensed by the balance. Another limitation is the sample geometry. In order for the sample to be sensed by the balance, the sample dimension in the direction of the acceleration should be a small fraction of a wavelength ($\lambda/10$). Powder has the slowest velocity (280 m/s)[10] which at 300 Hz has a wavelength of about 0.93 m. This means the sample dimension could be up to 9 cm in the direction normal to the plate without the acoustics of the sample coupling to the balance. This ensures the sample load appears to the acoustic port of the mass balance to be an inductive mass load $im\omega$ and does not have resonances in the sample that can couple to the mass balance resonance and obscure the resonance shift.

3. DEMONSTRATION OF MIXING

In order to investigate mixing in addition to mass measurement, a prototype mixing cup was affixed to a mass balance. Figure 6 shows the mass measuring and mixing prototype along with the effective network model of the mass balance/mixer. The major components of the piezoelectric actuator/balance/mixing prototype are a flextensional resonator and sampling cup and a thickness mode piezoelectric resonator for mixing the sample.

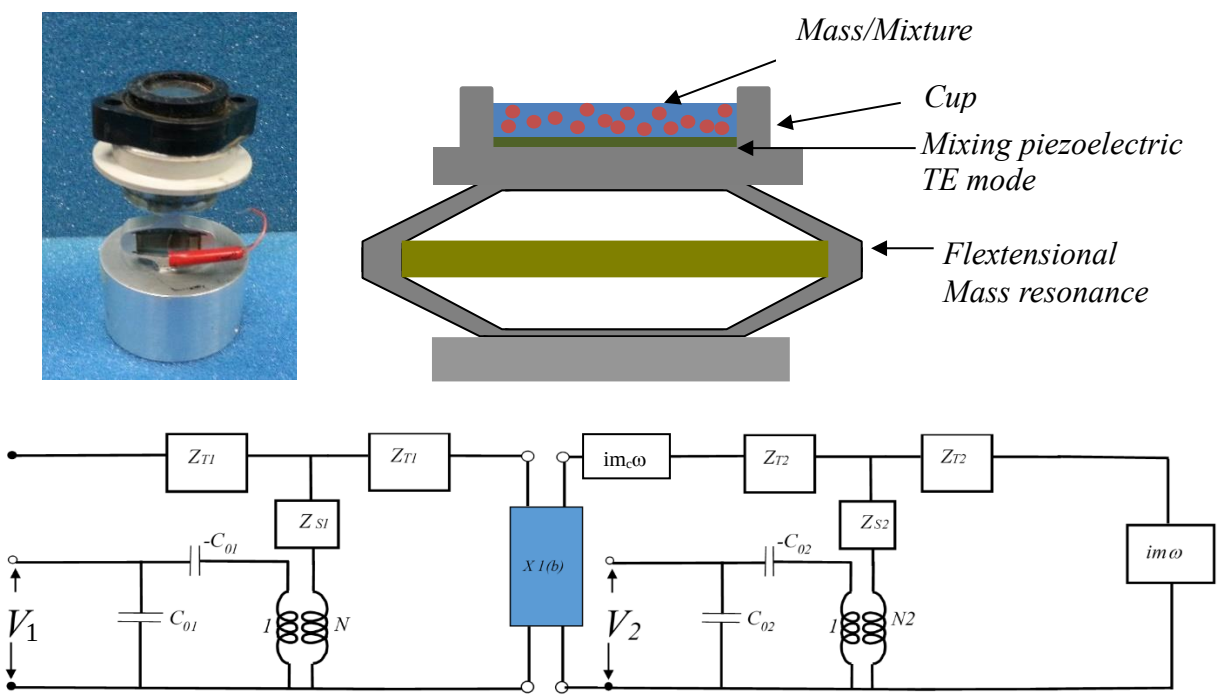

Figure 6. A photograph of the mass balance/mixer prototype and a schematic of the design. The network model for the balance mixer is shown in the bottom half of the figure. The mass balance is sensed on the left-most electrical port and the mixer is driven with a voltage V_2. The resonance frequency of the balance (1.5 kHz) is about 3 orders of magnitude below the mixer resonance (1.6 MHz). At the low frequency of the balance, the impedance of the piezoelectric collapses to $i\rho At\omega = im_p\omega$, where ρ is the density of the piezoelectric, A is the area of the TE transducer and t is its thickness, and m_p is the mass of the piezoelectric.

For this prototype, we used a higher resonance frequency (ultrasonic, >1 MHz) piezoelectric element to act as a mixing cup (nebulizer piezoelectric from American Piezoelectric Ceramics Ltd #50-1011), which allows efficient energy transport to the fluid, creating small scale eddies and streaming particles in the fluid. The network model for the mass measuring balance and the mixing piezoelectric are shown in Figure 6. In this case, we have a structure driven by piezoelectric material that has a low frequency resonance. When mass is added to a mechanical face/port of the structure the resonance frequency drops in a similar fashion to the Quartz Crystal Microbalance (QCM) or thin film monitors[11,12,13,14] ;however, the initial frequency is much lower in order to measure larger masses. To produce a low frequency resonator we have used a flextensional transducer design, modeling it (as shown in Figure 6) using a modified Mason's network model[15]. The model treats the flextensional as a bulk piezoelectric; however, due to the amplification and stress reduction of the flextensional arms one has to multiply the applied mass by the inverse of the strain amplification factor in order to get a reasonable agreement with theory.

The mass balance sense the mass by finding the resonance frequency, located at the minimum in the admittance (Maximum current amplitude) in the electrical port [V_1]. The mixing is accomplished by driving the electrical port [V_2] with a voltage large enough to induce acoustic mixing/streaming. At the low frequency of the mass balance, the impedance of the piezoelectric collapses to $i\rho At\omega = im_p\omega$, where ρ is the density of the piezoelectric, A is the area of the TE transducer and t is its thickness, and m_p is the mass of the piezoelectric. The total acoustic load can therefore be approximated by $i(m_c + m_p + m)\omega$, where m_c, m_p, and m are the mass of the cup, piezoelectric and sample respectively. The admittance measured in the mass balance port [V_1] and mixing port [V_2] are shown in Figure 7. It should be noted that the resonance curve of the mass balance port is sensitive to boundary conditions and whether it is free or clamped to a surface. In order to fix the boundary conditions we clamped the prototype using a vice to fix the boundary condition.

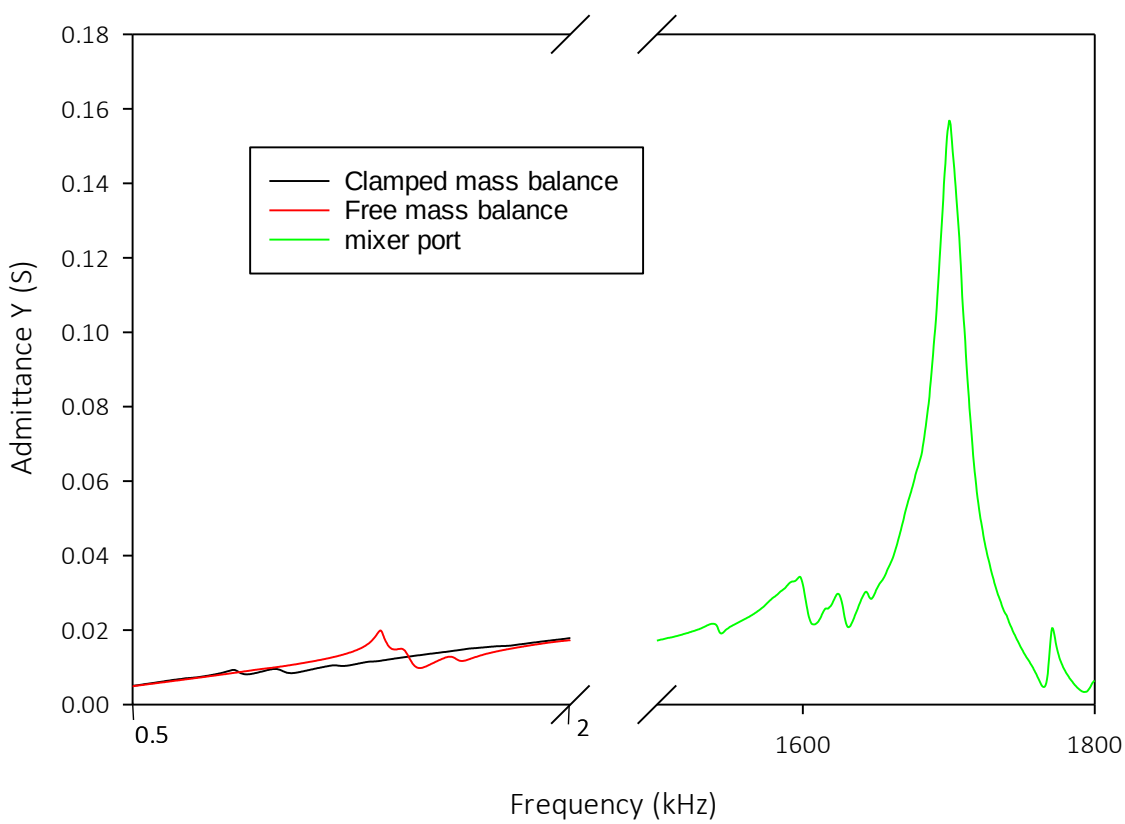

FIGURE 7: The admittance measured in the mass balance port [V_1] and mixing port [V_2]. The difference in frequency of the two ports is 3 orders of magnitude. The mixing port frequency is 1.6 MHz, while the mass balance resonance frequency is 1.5 kHz for the free-free balance and about 1 kHz for the clamped-free balance.

The main control strategy of this prototype is to sweep a range of frequencies and detect the highest current/voltage of loaded mixtures, which corresponds to the resonant frequency of the device. The measured data is then compared with previously calibrated frequency data to find the mass of the mixtures. Once the mass is found, the microprocessor triggers the relay to power the oscillator circuit, which drives the high frequency oscillations of piezoelectric elements, inducing microscale mixing throughout the water and powder. A flow diagram of the procedure is shown in Figure 8 and photographs of the experiment and the microprocessor output are shown in Figure 9. In this experiment a Mars Analog powder (JSC1A) is placed in the cup and water is added. The microprocessor scans the frequency and monitors the peak current amplitude into the mass balance port [V_1] which occurs at 856 Hz. The frequency is compared to the calibration curve and the mass is calculated to be 0.70 grams ± 2%. The microprocessor then switches the high frequency transducer into an oscillator circuit which drives the mixing piezoelectric in resonance for 10 seconds and mixes the water and powder (Figure 9d).

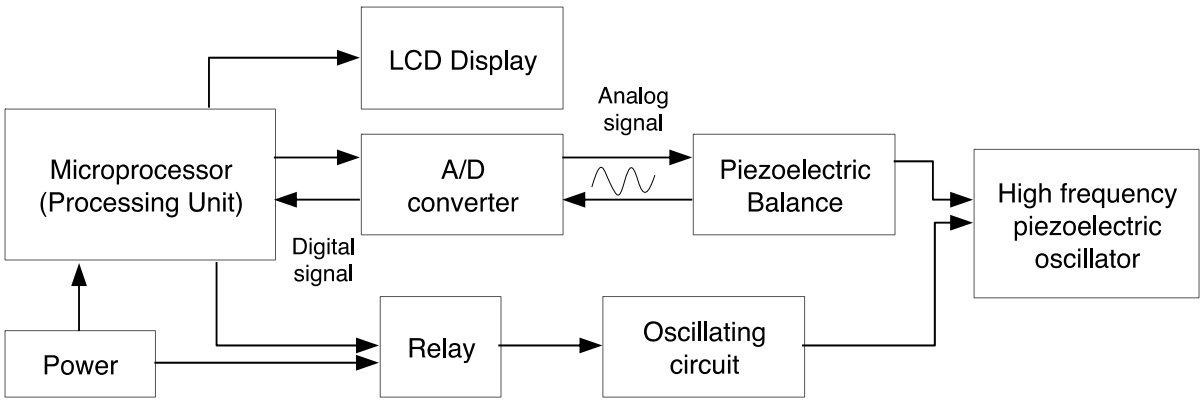

Figure 8. The procedures and components of the piezoelectric actuator/balance/mixing prototypes.

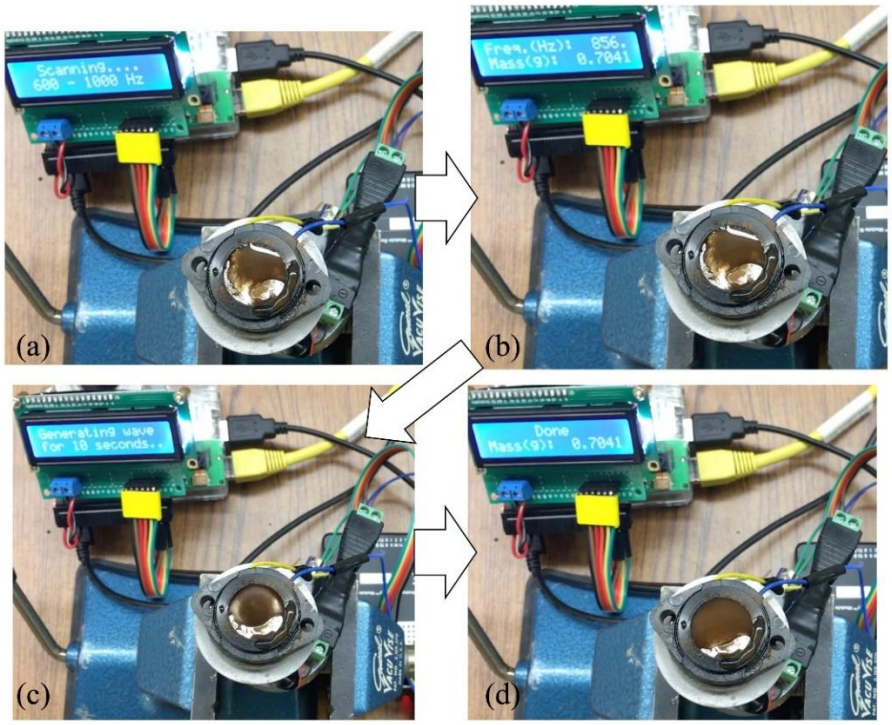

Figure 9. The piezoelectric actuator/balance/mixing procedure. (a) scanning the frequency ranging from 600 – 1000 Hz, (b) finding the resonant frequency and corresponding mass of the powder and liquid, (c) generating ultrasonic vibrations, (d) mixing the powder and liquid.

We also investigated designs that could measure and load instruments autonomously. One design that shows this capability is shown in Figure 10. A sample is dropped or shaken through a funnel[16] onto a surface that is connected to a calibrated flextensional resonator. The mass is determined from the frequency shift and a pushrod is activated to push the sample into the inlet of the In-Situ instrument.

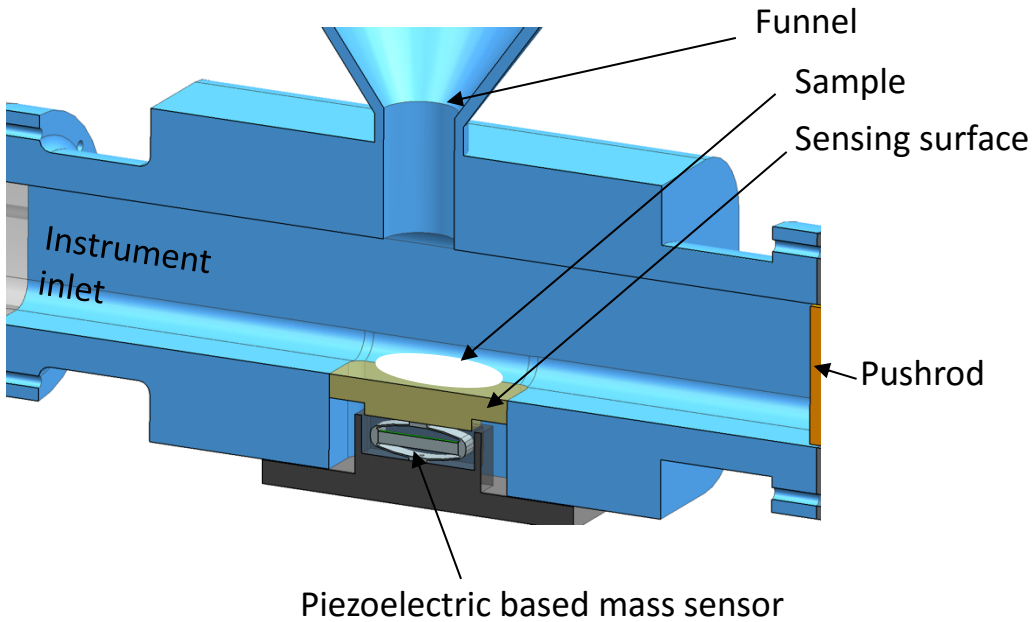

FIGURE 10. A resonance mass balance prototype that allows a push rod to remove sample from the measurement plate and move it to the inlet of an instrument.

4. DISCUSSION

The data from the prototype load cell and resonance balance suggest that we can design a mass measuring sensor based on a load cell that is sensitive enough to measure a 10 g sample to 2 % accuracy. The general agreement between the finite element models and the prototypes suggest that we can design the sensor to meet the mass sensitivity requirements for a given environment. Resonance measurements are a direct measurement determined from the frequency; measurement of frequency has the added benefit that it is less susceptible to thermal noise and one can use lock-in amplifier techniques to measure very small signals.

Other considerations that need to be weighed when choosing the appropriate mass balance for an instrument that is to be launched include the ability of balance to withstand environmental testing: random vibe, pyro-shock testing and thermal cycling. Since the flextensional is a soft spring and the measuring plate is fixed to the actuator, a launch lock or displacement limiter would likely be required to insure the actuator is not damaged during environmental testing. In addition, if the balance is to be used at low temperatures in the 100K range, the choice of piezoelectric material must be evaluated. Piezoelectric ceramics such as Lead Zirconate Titanate (PZT) have temperature dependencies that need to be accounted for when operating at temperatures other than room temperature. Similar PZT stacks produced by PI Ceramic[17] showed a reduction in both the piezoelectric constant and capacitance by factors of 0.57 and 0.43 at 100 K. If the balance is being designed for a cryogenic environment one could use the new single crystal materials PMN-PT[18] which have cryogenic piezoelectric properties comparable to PZT at room temperature.

The combination of mass measurement and mixing was demonstrated using a flextensional actuator and a thickness mode circular plate. In this case, moving the powder in the fluid required higher frequency excitation than the mass balance actuator could efficiently produce. This may not always be the case, however, and we are currently looking at ways to produce low and high frequency excitation with a single actuator.

3. SUMMARY

In this paper we tested a variety of resonance mass balance prototypes based on low frequency cantilever and flextensional actuators. The design based on the cantilever showed considerable dependence of the frequency shift on the location of the mass on the mass balance. The flextensional design was found to be more robust and the prototype designs could be confirmed using finite element modeling We have found that if the expected sample size is known, then an appropriate balance could be designed in the desired frequency range to produce mass measurements with errors in the range of a couple of percent. As a general rule of thumb the resonance frequency should be minimized as much as possible to allow for interrogation in low g environments and for larger sample size. We also investigated the use of the mass balance as a mixing cell by driving at larger voltages. The lower frequency excitation was found not to be as efficient a mixer as high frequency excitation. In order to produce high frequency excitation we added a thickness mode resonator to the bottom of the sampling cup and demonstrated both mixing of a Mars Analog powder (JSC1A) and water and a mass measurement.

ACKNOWLEDGMENT

Research reported in this manuscript was conducted at the Jet Propulsion Laboratory (JPL), California Institute of Technology, under a contract with National Aeronautics Space Administration (NASA). A portion of this work is in support of the pre-project planning for a lander mission to Europa. Reference herein to any specific commercial product, process, or service by tradename, trademark, manufacturer, or otherwise, does not constitute or imply its endorsement by the United States Government or the Jet Propulsion Laboratory, California Institute of Technology.

REFERENCES

[1] Sherrit, S., Trebi-Ollennu, A., Bonitz, R., Bar-Cohen, Y., & Yen, J. T. (2010, March). Compact sensitive piezoelectric mass balance for measurement of unconsolidated materials in space. In SPIE Smart Structures and Materials+ Nondestructive Evaluation and Health Monitoring (pp. 76471A-76471A). International Society for Optics and Photonics.

[2] Apollo Program http://en.wikipedia.org/wiki/Apollo_program (Downloaded Jan 8, 2010)

[3] Moonrise Proposal - MoonRise: Lunar South Pole-Aitken Basin Sample Return Mission would place a lander in a broad basin near the moon's south pole and return approximately two pounds of lunar materials for study. http://www.jpl.nasa.gov/news/news.cfm?release=2009-205 (Downloaded Jan 8, 2010)

[4] Stardust Mission - http://stardust.jpl.nasa.gov/home/index.html (Downloaded Jan 8, 2010)

[5] D.W.G. Sears , C.C. Allen , M.S. Bell , D. Bogard , D. Britt , D.E. Brownlee, C. Chapman, B.C. Clark, R. Dissley, M.A. Franzen, J. Goldstein, K. Nishiizumi, L. Nyquist, C.M. Pieters, D. Scheeres, E.R.D. Scott, A. Treiman, "The Hera near-Earth asteroid sample return mission: science requirements of the sample collector", Advances in Space Research 34 (2004) 2276–2280

[6] Mars Sample Return - see http://mars.jpl.nasa.gov/missions/samplereturns.html (Downloaded Jan 8, 2010)

[7] Carson, J. M., Bayard, D. S., & Açikmese, B. (2013). In-Flight Dynamical Method to Verify Sample Collection for Small-Body Sample Return Mission. Journal of Spacecraft and Rockets, 50(1), 230-243.

[8] Toda, R., McKinney, C., Jackson, S. P., Mojarradi, M., Trebi-Ollennu, A., and Manohara, H., "Development of Sample Verification System for Sample Return Missions," 2011 IEEE Aerospace Conf., IEEE Publ., Piscataway, NJ, March 2011, pp. 1–8. doi: 10.1109/AERO.2011.5747470

[9] Toda, R., Bae, Y., Grimes-York, J., Badescu, M., Vieira, P., Moreland, S., & Manohara, H. (2016, March). FiSI: Fiberscope sample imaging system for robotic comet surface sample return missions. In Aerospace Conference, 2016 IEEE (pp. 1-10).

[10] Chu-Heng Liu and Sidney R Nagel, "Sound and vibration in granular materials", J. Phys.: Condens. Matter 6 (1994) A433-A436

[11] G. Sauerbrey, "Verwendung von Schwingquarzen sur Wägung Dünner Schichten und zur Mikrowägung –*Translation* - Use of vibrating quartz for weighing of thin layers and for micro weighing", Z. Physik, 155, pp. 206-222, 1959

[12] S. Sherrit, V. Olazábal, J.M. Sansiñena, X. Bao, Z. Chang, Y. Bar-Cohen, "The use of Piezoelectric Resonators for the Characterization of Mechanical Properties of Polymers", Proceedings of the SPIE Smart Structures Conference, Vol. 4695, Paper No. 35, San Diego, CA., March 2002, SPIE

[13] S. Sherrit, X. Q. Bao, Y. Bar-Cohen, and Z. Chang, “BAW and SAW sensors for In-situ analysis”, Volume 5050, Paper No. 11, Proceedings of the SPIE Smart Structures Conference, San Diego, CA., Mar. 2003

[14] R.W. Cernosek, S.J. Martin, A.R. Hillman, H.L Bandy, “Comparison of the Lumped-Element and Transmission-Line models for the Thickness-Shear-Mode Quartz Resonator Sensors, IEEE Trans. on Ultrasonics, Ferroelectrics and Frequency Control, **45**, 5, pp.1399-1407, Sept.,1998

[15] S. Sherrit, S.P. Leary, B. Dolgin, Y. Bar-Cohen, "Comparison of the Mason and KLM Equivalent Circuits for Piezoelectric Resonators in the Thickness Mode", Proceedings of the IEEE Ultrasonics Symposium, pp. 921-926 , Lake Tahoe, Oct.,1999

[16] Sherrit, Stewart, Kent Frankovich, Xiaoqi Bao, and Curtis Tucker. "Miniature piezoelectric shaker mechanism for autonomous distribution of unconsolidated sample to instrument cells." In SPIE Smart Structures and Materials+ Nondestructive Evaluation and Health Monitoring, pp. 72900H-72900H. International Society for Optics and Photonics, 2009.

[17] S. Sherrit, C. M. Jones, J. B. Aldrich, C. Blodget, X. Bao, M. Badescu, Y. Bar-Cohen, “Multilayer piezoelectric stack actuator characterization”, Proceedings of the SPIE 15th International Symposium on Smart Structures and Materials, San Diego, CA, SPIE Vol. 6929-8, 9-13 March, 2008

[18] Zhang, Shujun, Hyeong Jae Lee, Xiaoning Jiang, Wenbin Huang, Stewart Sherrit, and Matthew M. Kropf. "Chapter 7 Cryogenic Piezoelectric Materials for Transducer Applications." In Low Temperature Materials and Mechanisms, pp. 183-212. CRC Press, 2016.