The Advanced Microwave Radiometer – Climate Quality (AMR-C) Instrument for Sentinel-6

National Aeronautics and Space Administration

Jenna Kloosterman, Shannon Brown, Timothy Koch, Nho Vo, Fabien Nicaise, Erich Schlecht, Matthew Bloom, Lance Milligan, K. Scott Tripp, Pekka Kangaslahti, Isaac Ramos, Shannon Statham, Anders Skalare, Richard Cofield, Frank Maiwald

Jet Propulsion Laboratory, California Institute of Technology, Pasadena, CA 91109

AMR-C Overview

Key Science Goals for Sentinel-6
Measure ocean topography to help determine:
- ocean circulation
- climate change
- sea level rise year-over-year

Purpose of AMR-C
Measure path delay due to atmospheric water vapor along the altimeter path

Mission Requirements
- Two satellites are being built to be launched approximately 5 years apart
- Each satellite is designed for a 5.5-year mission
- Measure year-to-year global mean sea level stability to within 1 mm (Level 1)

↓

Level 3 Payload Requirements
- The path delay error due to altimeter-derived sea surface height will be less than 0.8 cm
- The path delay stability shall be maintained to 0.7 mm averaged over a one year period

↓ Global path delay retrieval algorithm

AMR-C Level 4 Requirements
- Microwave brightness temperature error will be less than 0.65 K at a 1 Hz sample rate
- Radiometer brightness temperature will be stable to +/- 0.1K over a one year period

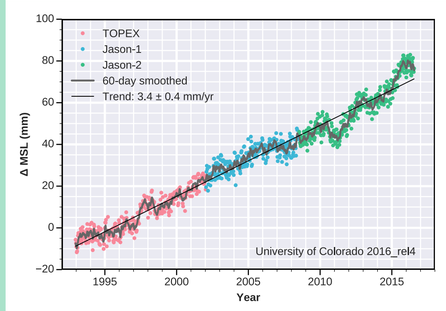

Figure 1. Global Mean Sea Rise from TOPEX, JASON-1, and Jason-2.[1]

AMR Radiometer Bands:
- 18.7 GHz corrects for ocean surface effects
- 23.8 GHz senses atmospheric water vapor
- 34.0 GHz corrects for cloud liquid

AMR Design Heritage from:
- TOPEX-Poseidon (1992)[2]
- Jason-1 (2001)[3]
- OSTM/Jason-2 (2008)[4]
- Jason-3 (2016)[5]
- SWOT (expected 2020)

High Resolution Microwave Radiometer (HRMR)[6] Bands:
- 90 GHz, water vapor continuum
- 130 GHz, water vapor continuum
- 168 GHz, water vapor continuum

Instrument Description

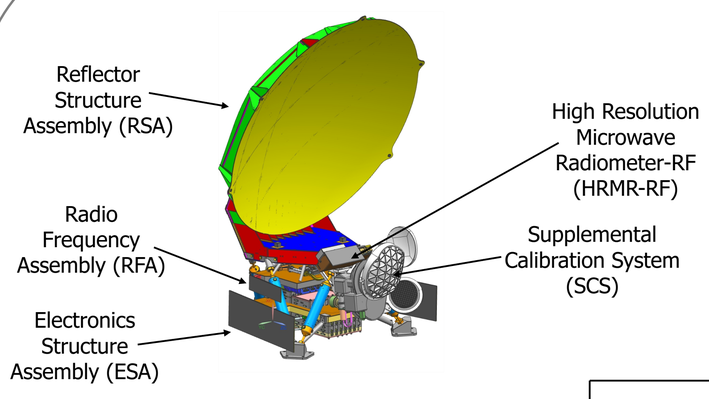

Figure 2. (left) AMR-C Instrument Model.

AMR-C will have 3 receivers, two with bands at 18, 24, and 34 GHz referred to as AMR-H and AMR-V, and one with bands at 90, 130, and 168 GHz, referred to as HRMR. The AMR-V unit is a cold spare for AMR-H.
Each AMR unit consists of:
- an Electronics Unit (EU)
- a receiver, and
- a noise source.

The EU contains the:
- Power Control Unit (PCU),
- Data Acquisition & Control (DAC), and
- Housekeeping Unit (HKU).

Figure 3. (below) AMR-C instrument block diagram with color-coded subsystems. The SCS is in purple, AMR-H and AMR-V are in green, and HRMR is in blue.

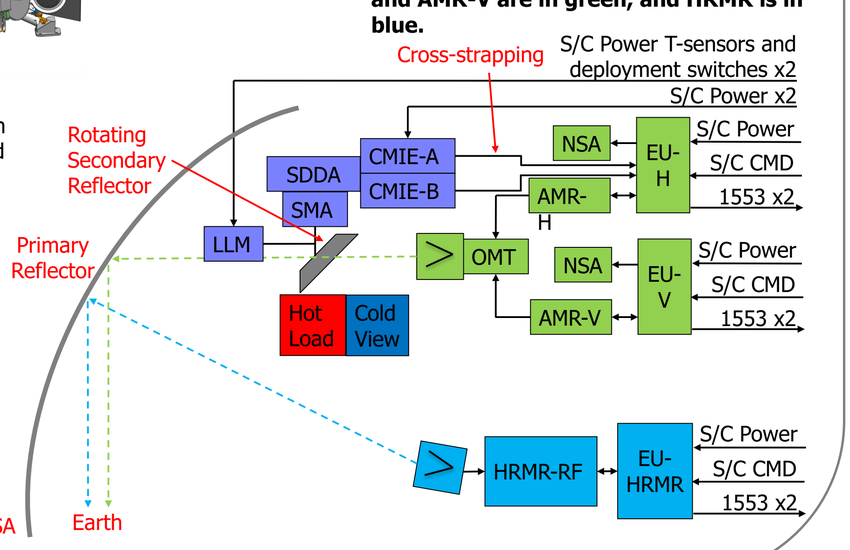

SCS

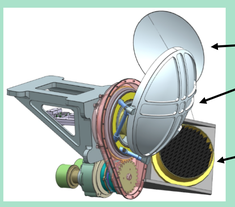

Figure 4. SCS

The secondary mirror is used to switch the view of the radiometer between the Earth, the cold cal target, and the warm cal target to maintain path delay stability. These calibrations will be done over land in order to maximize observation times over the ocean. The secondary is held in place by the Launch Lock Mechanism (LLM) during launch.
The SCS consists of the:
- CMIE (Control Mechanism Interface Electronics)
- SMA (Spin Mechanism Assembly)
- LLM (Launch Lock Mechanism)
- CMIE (Calibrator Mechanism Interface Electronics)
- SDDA (Standard Dual Drive Assembly)

Thermal Stability Requirements

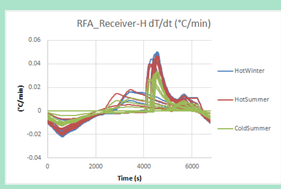

Figure 5. Receiver stability (≤0.04° C/min)

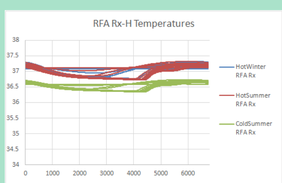

Figure 6. Receiver temperature range (+/-2.5 ℃)

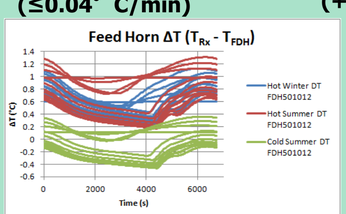

Figure 7. Temperature difference between feed horn and receivers (less than or equal to 10℃)

AMR Receiver Design

Figure 8 (right). Top and bottom views of the AMR receivers for 18, 24, and 34 GHz.

Signal is relayed to the instrument through a circular feed horn. The signal is split between the two receivers modules by the Ortho-mode Transducer (OMT). From there a diplexer divides the signal into 18/24 GHz and 34 GHz channels and the 18/24 GHz channel is spilt into 18 and 24 channels. A detector diode along with an ADC converts the signal to a digital signal, which is then relayed to the spacecraft and transmitted to the ground.

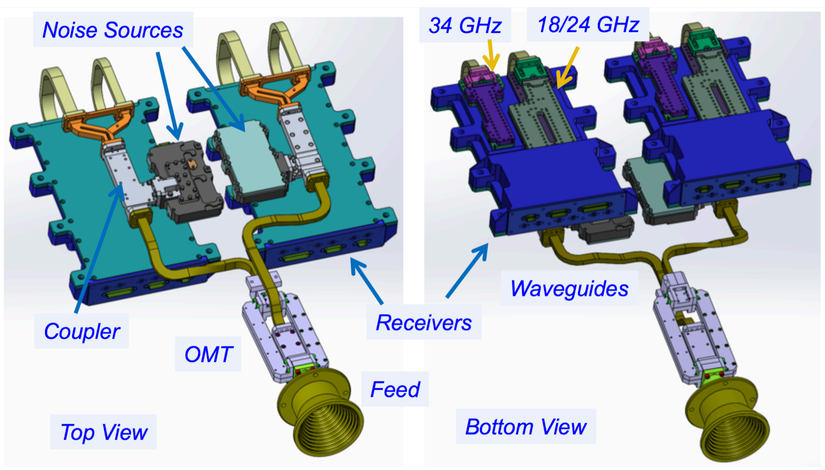

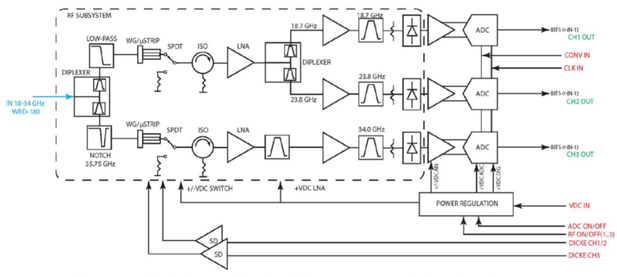

Figure 9 (above). AMR receiver block diagram.

Figure 10 (below). A block diagram for the noise source.

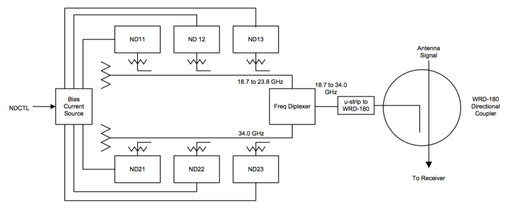

A Dicke switch toggles between the signal and a noise source for gain stability calibration purposes. Each receiver side contains 3 diodes that can be used separately or together.

Parameter	Requirement		
Input Return Loss (over channel passbands)	≥ 15 dB		
Dicke Switch Isolation	≥ 30 dB		
Channel Center Frequency	18.7 GHz	23.8 GHz	34.0 GHz
Center Frequency Tolerance	±50 MHz	±100 MHz	± 100 MHz
Center Frequency Knowledge	± 20 MHz	± 20 MHz	± 50 MHz
Channel Noise Bandwidth	200 MHz	400 MHz	700 MHz
Noise Bandwidth Tolerance	± 50 MHz	± 100 MHz	± 150 MHz
Passband Ripple	± 1 dB max	± 1 dB max	± 1 dB max
Stopband Rejection	> 50 dB	> 50 dB	> 50 dB
System Noise Figure (goal: minimize)	≤ 6.2 dB	≤ 6.5 dB	≤ 6.6 dB
System Gain/Temperature Coefficient	≤ 0.2 dB/℃	≤ 0.2 dB/℃	≤ 0.2 dB/℃
Post-detector Circuit Video (3 dB) Bandwidth	≥ 75 kHz	≥ 75 kHz	≥ 75 kHz
Backend Noise (relative to radiometric noise)	≤ 1/3	≤ 1/3	≤ 1/3
Input Dynamic Range	2.7 to 750 K		
Digitizer Sampling Rate (goal: maximize)	≥ 200 ksps		

Table 1. Level 5 Receiver Requirements

High Resolution Microwave Radiometer (HRMR)

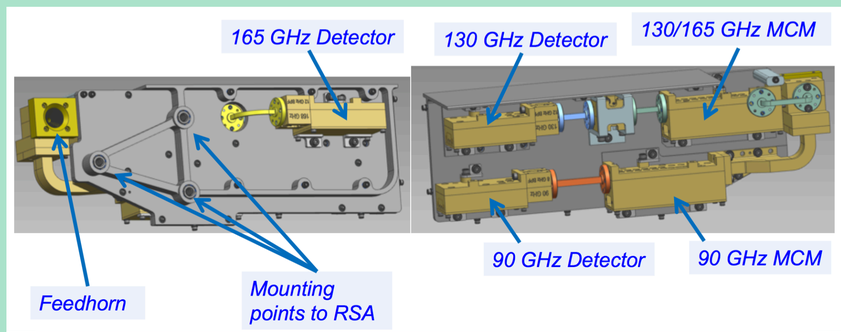

Figure 11. HRMR top and bottom views.

In order to provide higher spatial resolution to improve coastal zone measurement accuracy to a 3-5 km diameter footprint, an HRMR receiver has been added to the AMR-C instrument.
- Designed to fit in the focal plane of RSA and minimize AMR beam blockage
- Feed horn and millimeter wave modules assembled on a plate that has the radiator for HRMR-RF
- Three mounting points to attach and shim to the bracket on RSA

HRMR will interface with an EU hardware identical to the AMR units through its digitizer driver unit (DDU). This receiver utilizes low noise, high gain Indium Phosphide (InP) MMICs to amplify incoming signal in order to detect it. Like the AMRs, HRMR signal is relayed through a feed horn into detector modules (DMs) for each frequency. The calibration noise source is integrated in the multi-chip module (MCM). It has two noise diodes and directional couplers to provide stable calibration references. Additional calibration and stability is provided by the integrated Dicke switch that toggles between the antenna and reference load at 2 kHz rate.

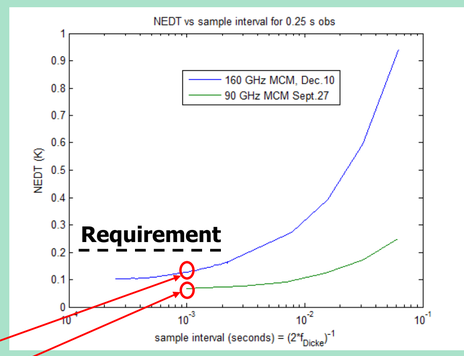

160 GHz NEDT=0.09 K @ f_{Dicke}=2 kHz
90 GHz NEDT=0.05 K @ f_{Dicke}=2 kHz

Dicke frequency ← → sample interval

Radiometric Testing of protoype receivers showed greater than 50% margin to sensitivity requirement.

Figure 12. HRMR sensitivity.

National Aeronautics and Space Administration

Jet Propulsion Laboratory
California Institute of Technology
Pasadena, California

www.nasa.gov

Copyright 2017. All rights reserved.

References
[1]Nerem, R. S., et al. "Estimating mean sea level change from the TOPEX and Jason altimeter missions." *Marine Geodesy* 33.S1 (2010): 435-446.
[2]Ruf, C. S., et al. "TOPEX/Poseidon Microwave Radiometer (TMR). I. Instrument description and antenna temperature calibration." *IEEE Transactions on Geoscience and Remote sensing* 33.1 (1995): 125-137.
[3]Ménard, Yves, et al. "The Jason-1 mission special issue: Jason-1 calibration/validation." *Marine Geodesy* 26.3-4 (2003): 131-146.
[4]Lambin, Juliette, et al. "The OSTM/Jason-2 mission." *Marine Geodesy* 33.S1 (2010): 4-25.
[5]Maiwald, Frank, et al. "Reliable and Stable Radiometers for Jason-3." *IEEE Journal of Selected Topics in Applied Earth Observations and Remote Sensing* 9.6 (2016): 2754-2762.
[6]Kangaslahti, Pekka, et al. "CubeSat scale receivers for measurement of ice in clouds." *Microwave Radiometry and Remote Sensing of the Environment (MicroRad), 2016 14th Specialist Meeting on*. IEEE, 2016.