Killer Problems: How to Test the *$%! Out of it!

Pablo Narvaez
Ken Diaz
David Henriquez
Eric Aguilar

Jet Propulsion Laboratory
California Institute of Technology

Curiosity Parachute Deploy and Impact Site

images provided by Mars Reconnaissance Orbiter's HiRISE Instrument

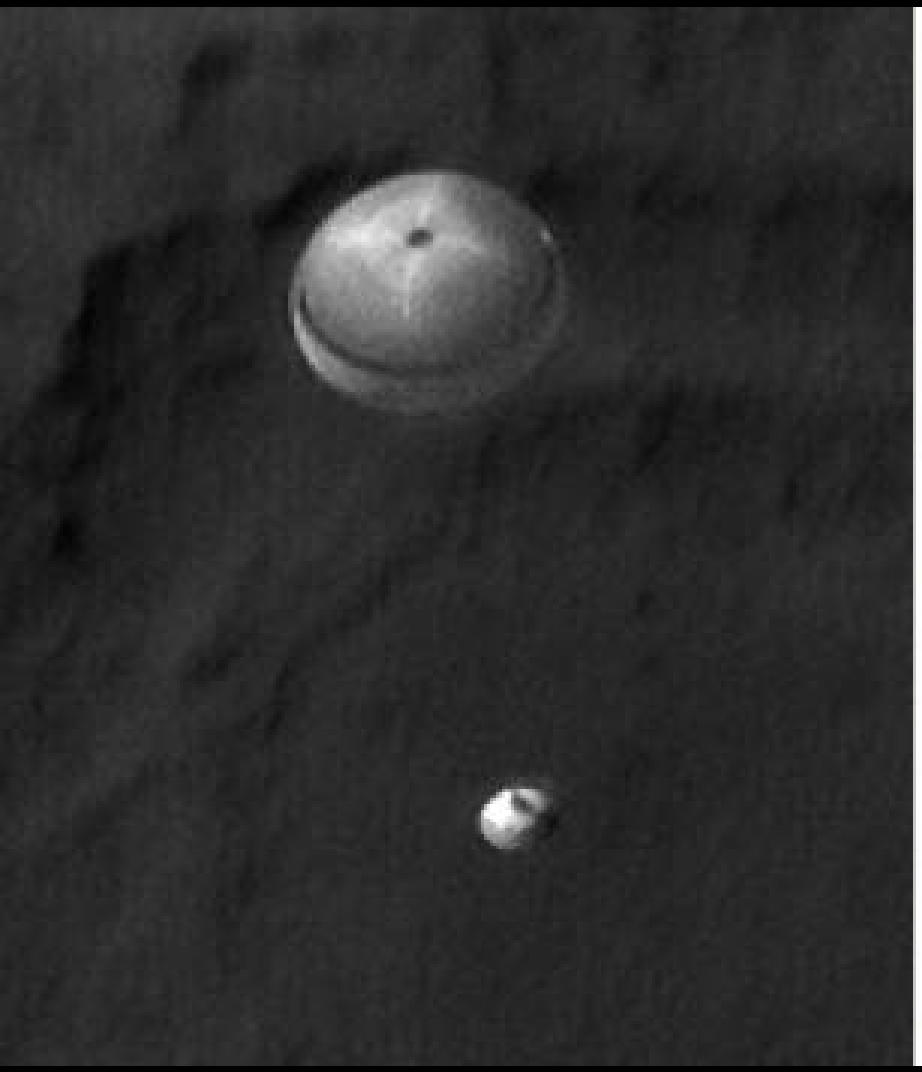

Curiosity Parachute Test (5 Years Earlier)

The Testing Mindset

- Understand the operating environment
  - What the system can/can't sense and what it could experience
- Understand the system sensitivities
  - Know how an error in one part of the system will propagate
- Have creative pessimism
  - Things will go wrong in unusual ways

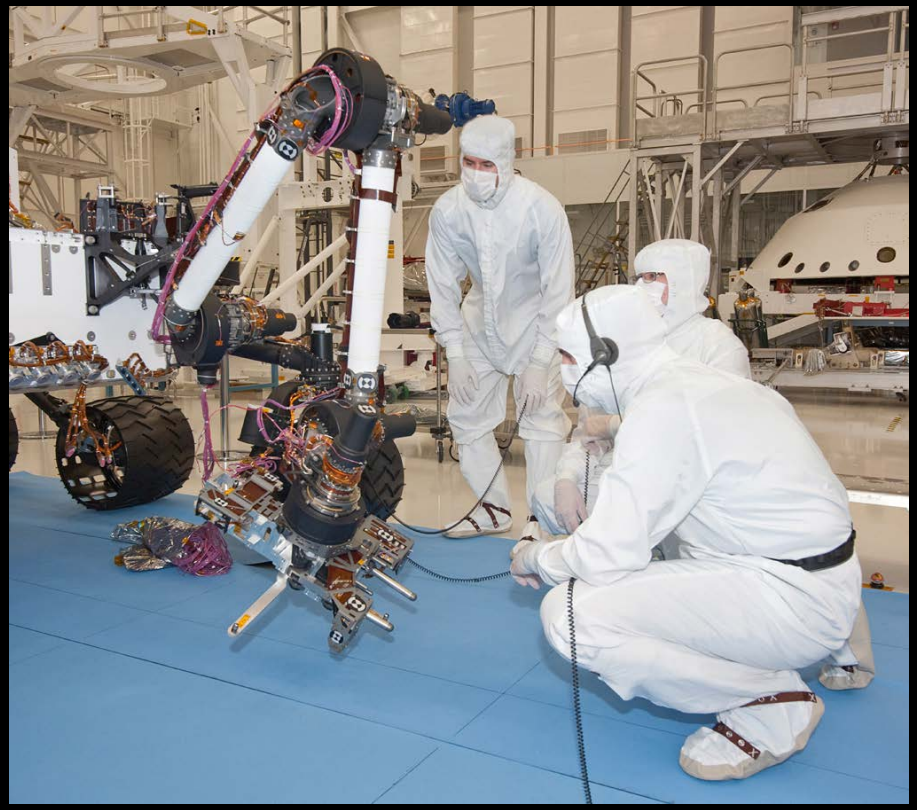

NASA/JPL-Caltech

What makes an effective test program?

1. Must have detailed knowledge of the design
2. Understand the root cause of the problem
3. Maintain the ability to control and measure the test environment

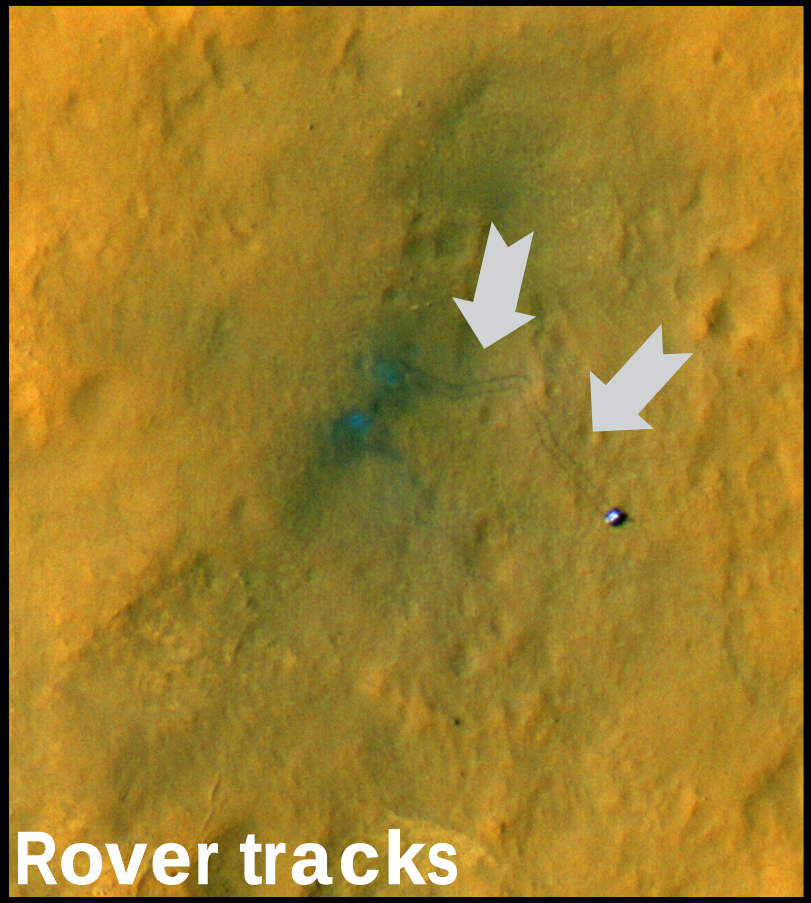

MRO's HiRISE Instrument
NASA/JPL-Caltech/Univ. of Arizona

Break into 3 groups

- Electrical
- Mechanical
- Computer Science

Scenario….

1 Knowledge of the Design

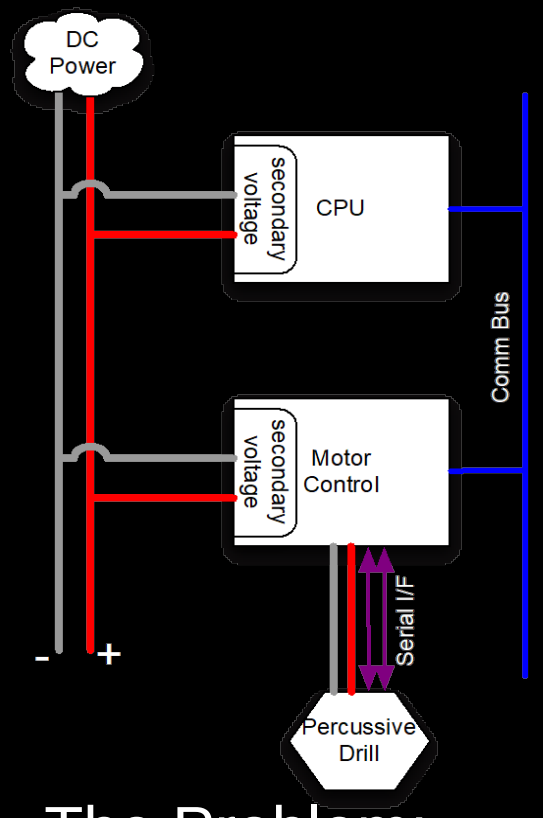

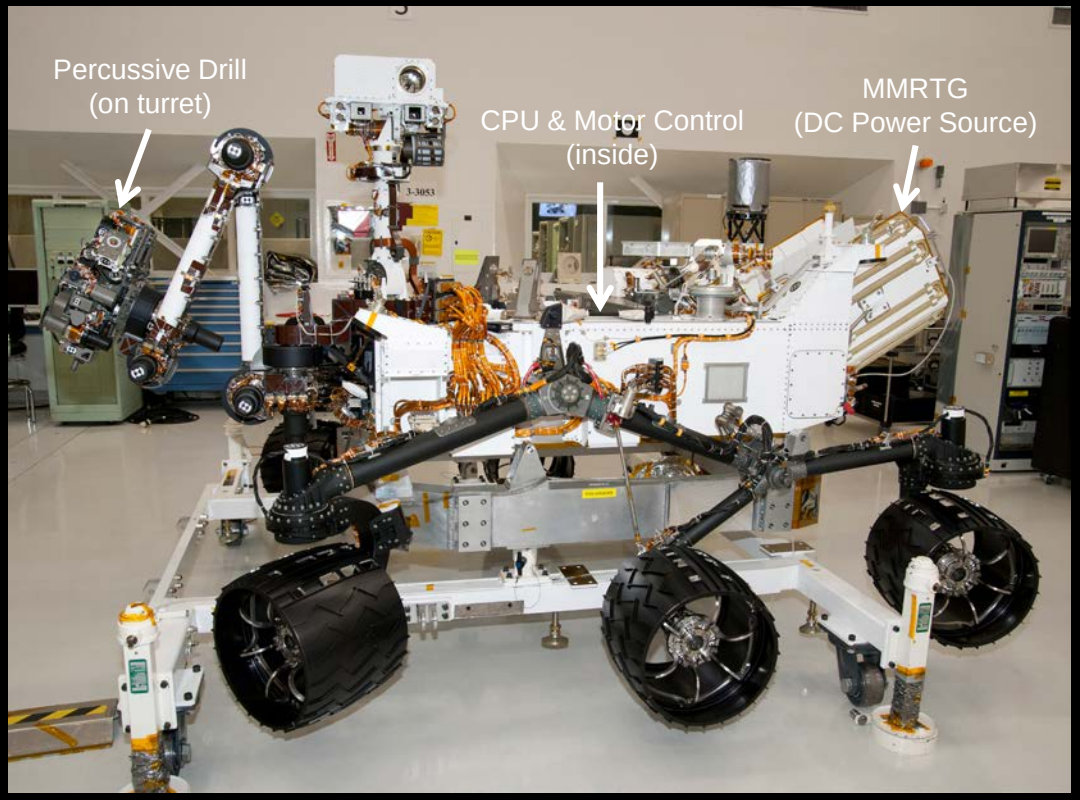

NASA/JPL-Caltech

- The Problem:
  - Booted the system running functional procedures for Robotic Arm and Percussive Drill
  - During one particular drill sequence the CPU reset

Brainstorm possible causes

- In your teams brainstorm possible causes that caused the CPU Reset
  - Additionally, the Flight Rover is in Florida being processed for Launch

Some additional measurements revealed the following Balanced Bus information

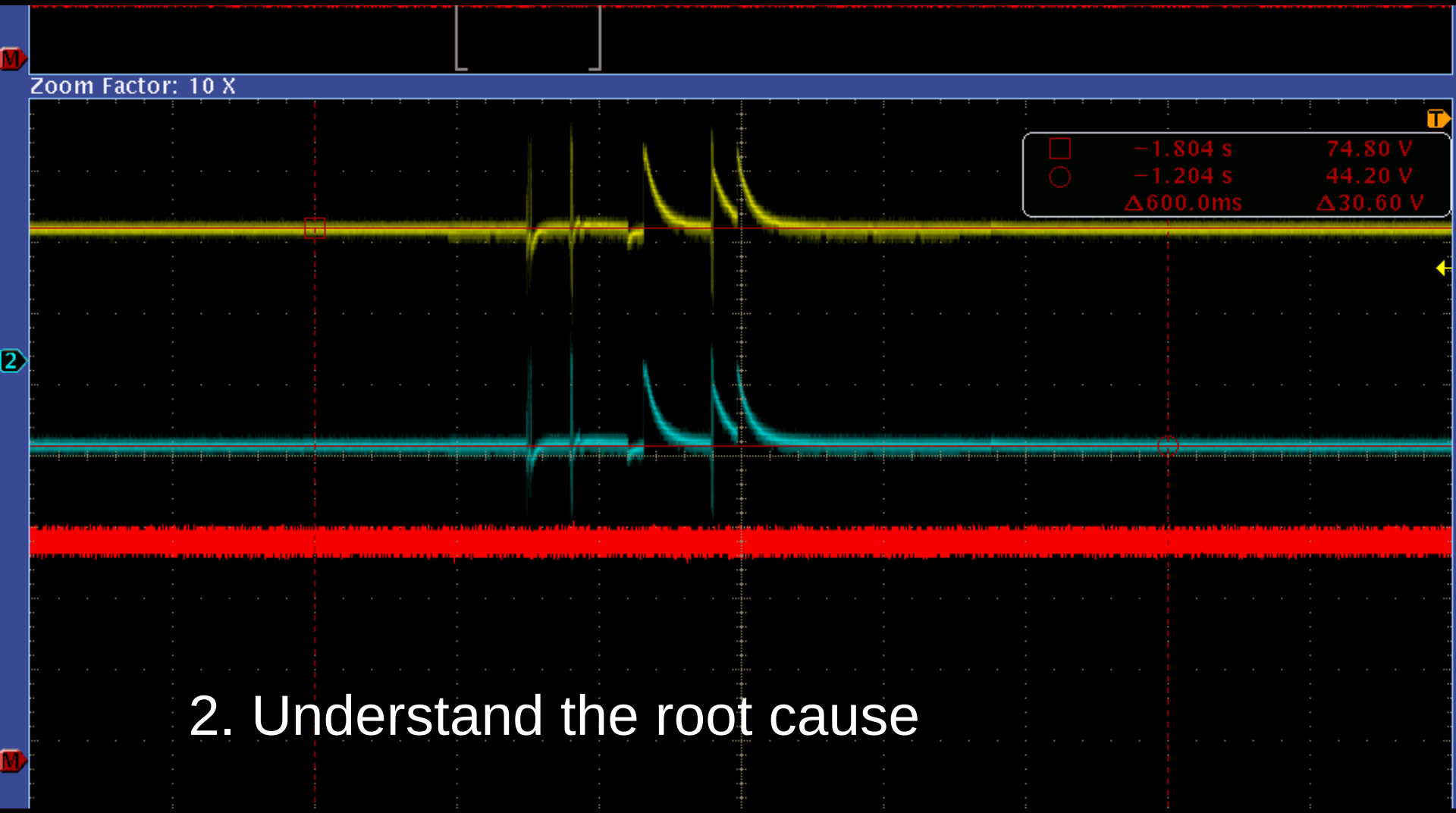

2. Understand the root cause

Brainstorm possible test configurations

- In your teams brainstorm test configurations that will allow you to induce the anomalous behavior
  - Remember your Launch window is rapidly approaching

Approach

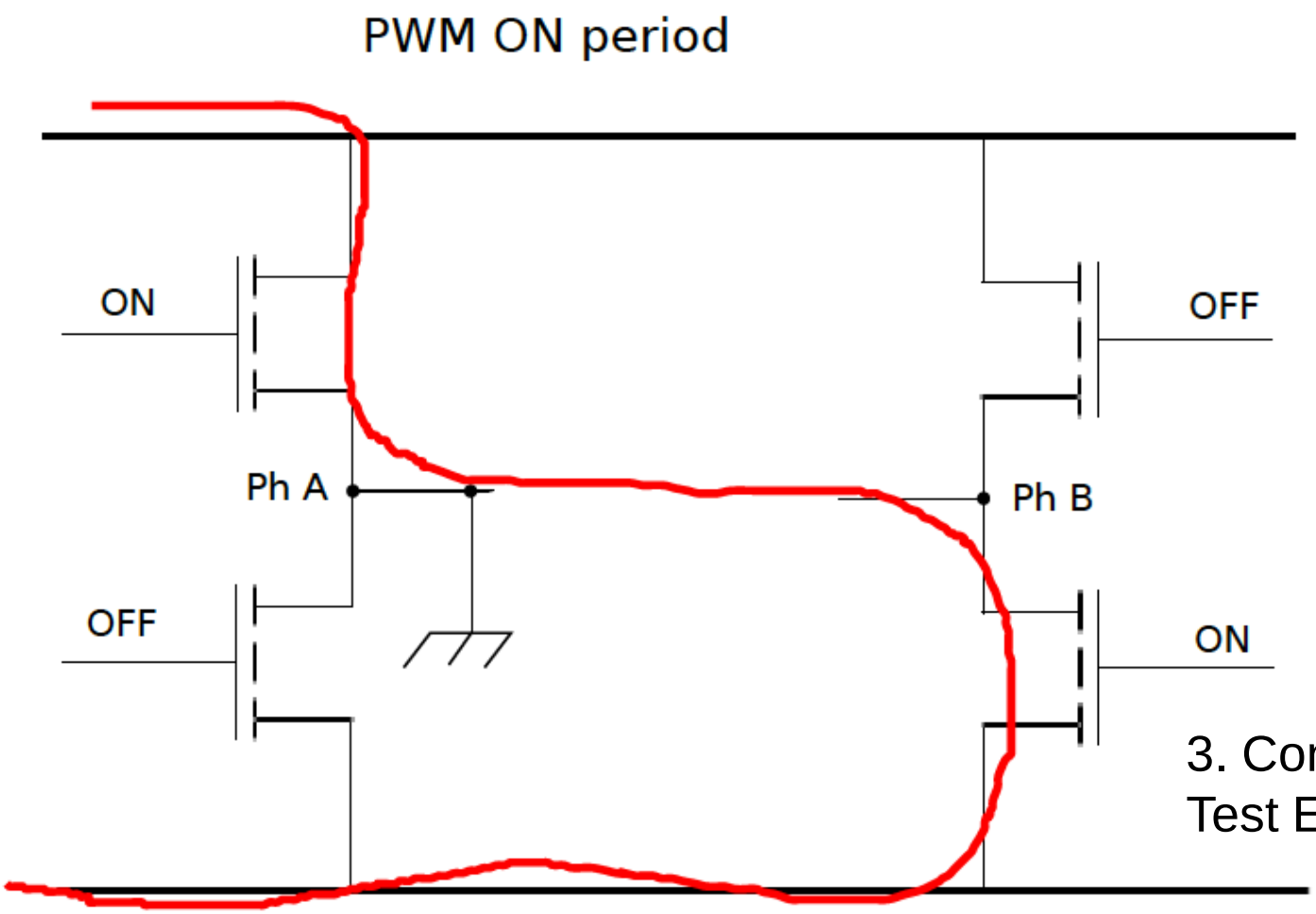

$V_{hi\text{-}chas}$= ~0V
$V_{lo\text{-}chas}$= ~30V

3. Control and Measure Test Environment

Summary

- After root cause was determined and a fix applied to the system
- The previously determined H-Bridge test configuration was used to validate the fix to the spacecraft

Workshop Feedback!

Please find this workshop in the SHPE 2016 mobile app and submit your feedback!

If you don't have the SHPE 2016 app, go download it!

Completing workshop surveys enters you in a raffle to win prizes!

Don't forget to sign into the app so we know how to contact you!

Jet Propulsion Laboratory
California Institute of Technology

jpl.nasa.gov