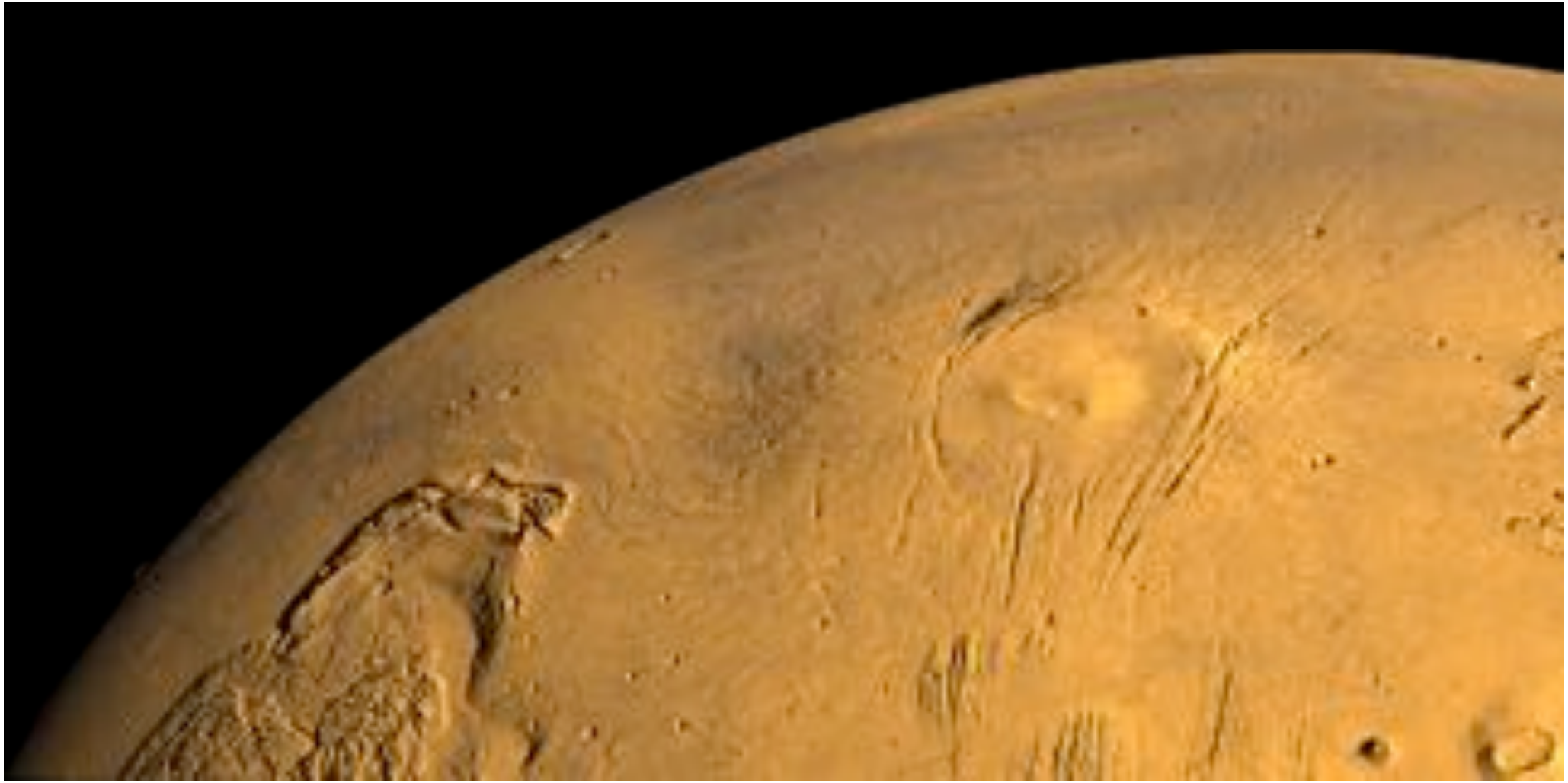

Planetary Protection Technology Needs for Future Missions (2021-2030) in the NASA Mars Exploration Program

Joseph Parrish
Deputy Manager, Mars Program Formulation Office
Manager, Mars Technology Development
18 October 2016

Jet Propulsion Laboratory
California Institute of Technology

© 2016 California Institute of Technology. Government sponsorship acknowledged.

Overview

- **Mars Science and Mission Context**
- **Potential Near-Term (2021-2030) Mars Mission Concepts**
  - **Next Mars Orbiter (NeMO)**
  - **Sample Retrieval & Launch (SRL)**
  - **Mars Returned Sample Handing (MRSH)**
- **Planetary Protection Technology Activities/Needs for Near-term Mars Missions**
- **Summary**

Mars Science Strategy

Jet Propulsion Laboratory
California Institute of Technology

- **Goal I: Determine If Life Ever Arose On Mars**
  - Objective A: Characterize past habitability and search for evidence of ancient life
  - Objective B: Characterize present habitability and search for evidence of extant life
  - Objective C: Determine how the long-term evolution of Mars affected the physical and chemical environment critical to habitability and the possible emergence of life

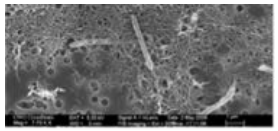

- **Goal II: Understanding The Processes And History Of Climate On Mars**
  - Objective A.: Characterize Mars' Atmosphere, Present Climate, and Climate Processes Under Current Orbital Configuration
  - Objective B.: Characterize Mars' Recent Climate and Climate Processes Under Different Orbital Configurations
  - Objective C.: Characterize Mars' Ancient Climate and Climate Processes

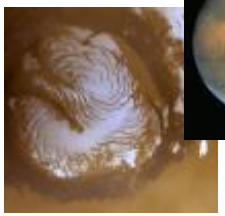

- **Goal III: Determine The Evolution Of The Surface And Interior Of Mars**
  - Objective A.: Determine the nature and evolution of the geologic processes that have created and modified the Martian crust
  - Objective B.: Characterize the structure, composition, dynamics, and evolution of Mars' interior
  - Objective C.: Understand the origin, evolution, composition and structure of Phobos and Deimos.

- **Goal IV: Prepare For Human Exploration**
  - Objective A: Obtain knowledge of Mars sufficient to design and implement a human mission with acceptable cost, risk and performance

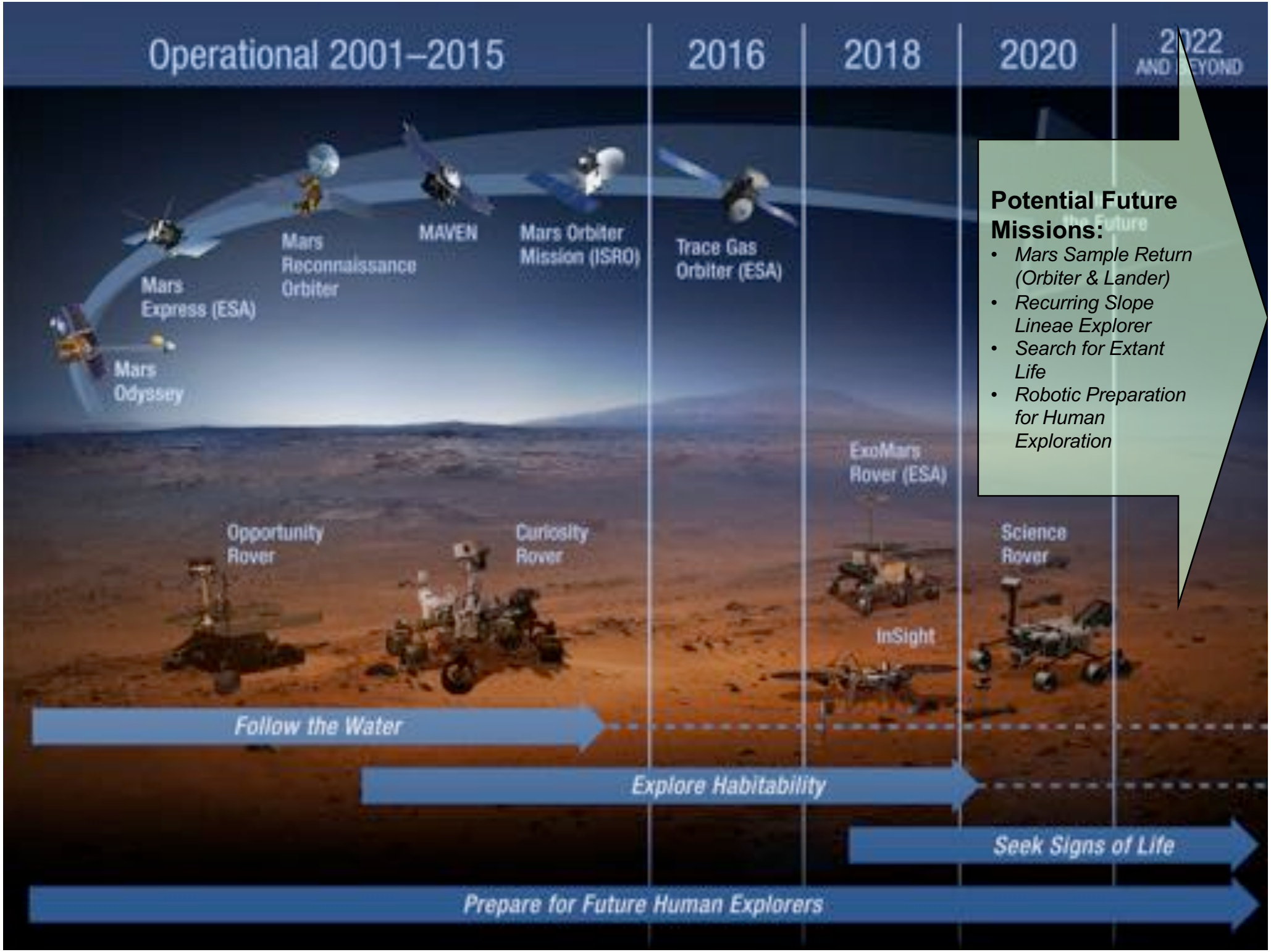
Operational 2001–2015
2016
2018
2020
2022
AND BEYOND
Mars Odyssey
Mars Express (ESA)
Mars Reconnaissance Orbiter
MAVEN
Mars Orbiter Mission (ISRO)
Trace Gas Orbiter (ESA)
ExoMars Rover (ESA)
Opportunity Rover
Curiosity Rover
InSight
Science Rover
Potential Future Missions:
• Mars Sample Return (Orbiter & Lander)
• Recurring Slope Lineae Explorer
• Search for Extant Life
• Robotic Preparation for Human Exploration
Follow the Water
Explore Habitability
Seek Signs of Life
Prepare for Future Human Explorers

Next Mars Orbiter (NeMO) Concept

Capability to Enable Future Pathways

Jet Propulsion Laboratory
California Institute of Technology

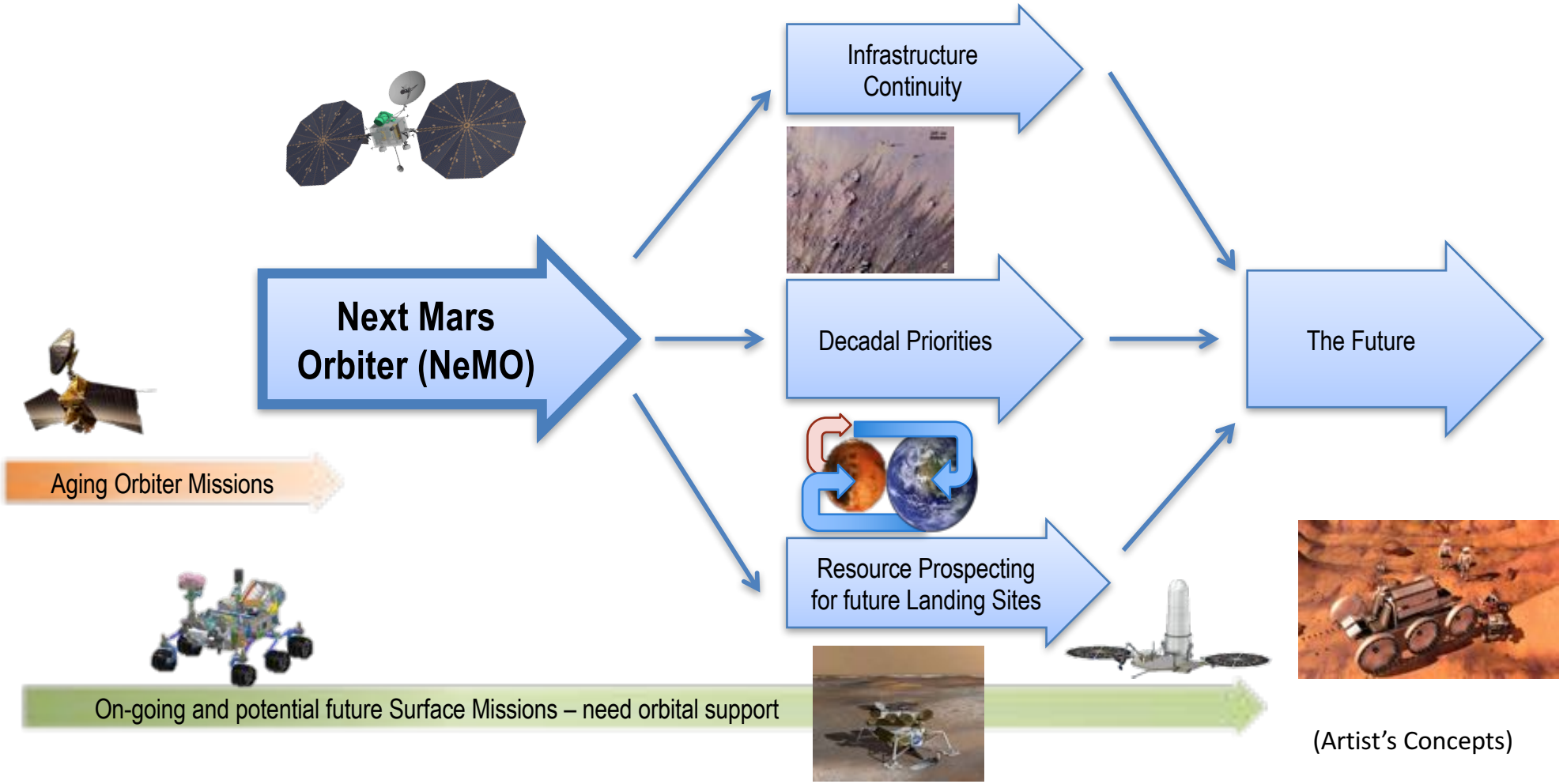

(Artist's Concepts)

Timely Renewal and Enhancement of Infrastructure is needed to Support Future Missions

MSR Decadal Survey Concepts (2010) vs. Concepts Under Study Today

Jet Propulsion Laboratory
California Institute of Technology

MAX-C (Caching Rover)

Mars Sample Retrieval & Launch

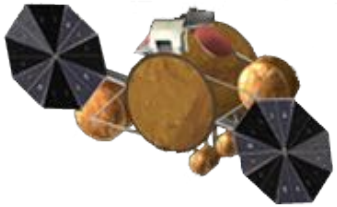

Mars Sample Return Orbiter
(dedicated MSR only)

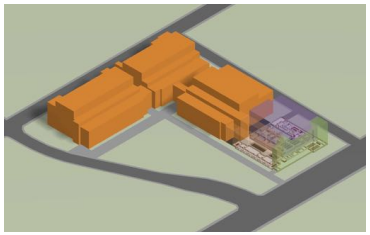

Mars Returned Sample Handling

- 3 Main Flight Elements + One Ground Approach Retained
- **Multi-purpose approach for first 2 mission elements**
  - MSR + other objectives
- **Additional mission required for sample recovery if no entry capsule on '22 orbiter***

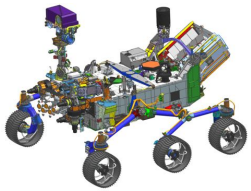

Mars 2020
(Caching + In Situ Rover)

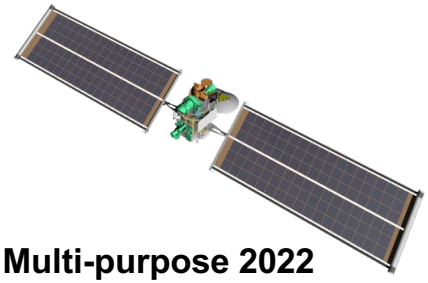

Multi-purpose 2022
"Next Mars Orbiter (NeMO) Concept"
[*incl. Sample Capture & Containment]

Sample Retrieval Lander
(Platform Reference Architecture)

Mars Returned Sample Handling

Concepts Under Study

Earth delivery alternatives:

- **a) Add Earth Entry Vehicle – direct return *a la* Stardust, OSIRIS-REX**
- **b) Delivery to cis-lunar space for Human-Assisted Return ("HAMSR") or direct earth entry**
- **c) Hand-off to later robotic courier in Mars orbit for earth return**

Potential Mars Sample Return Architecture

Jet Propulsion Laboratory
California Institute of Technology

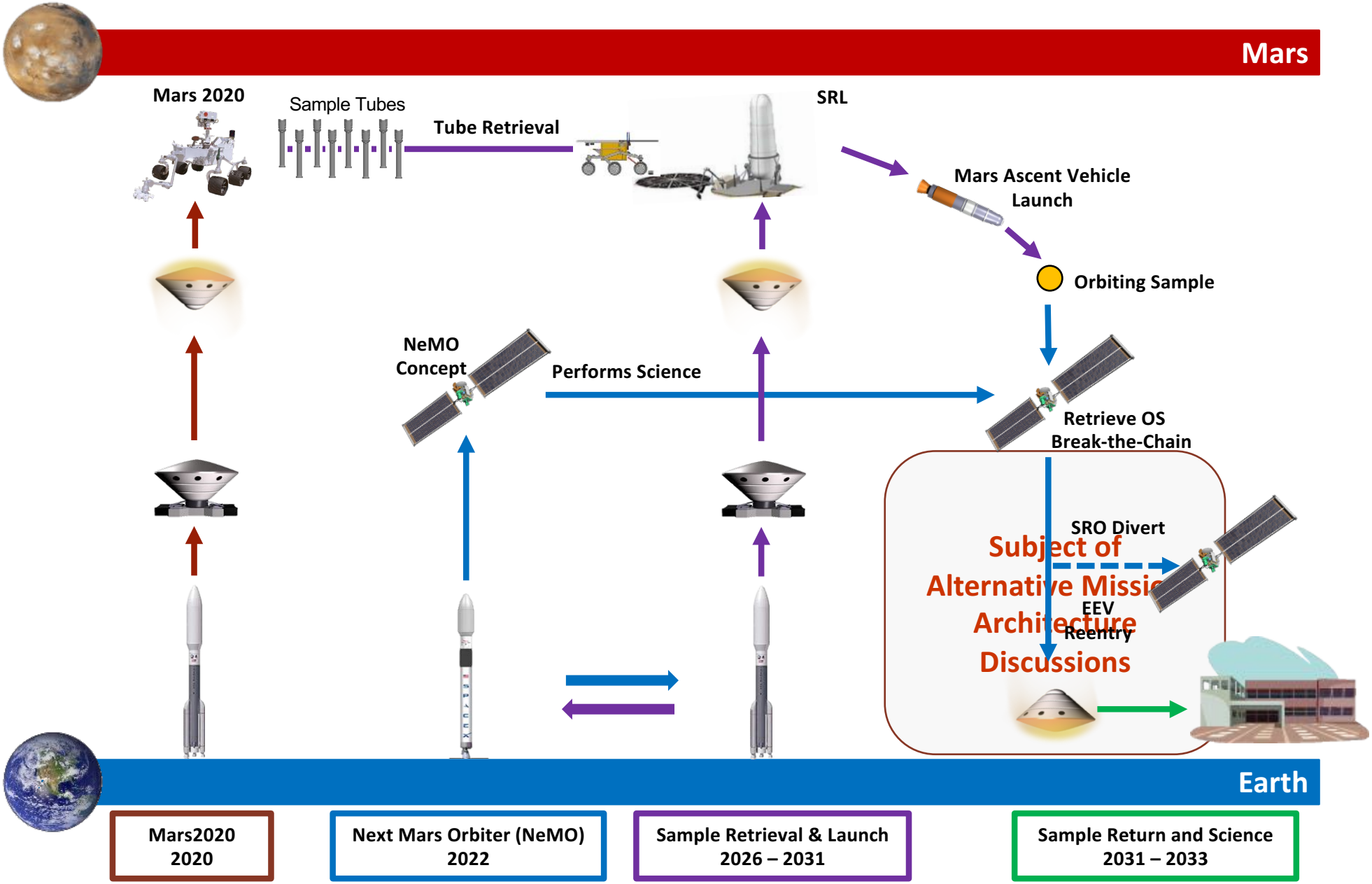

Potential Sample Return Lander Concepts

Jet Propulsion Laboratory
California Institute of Technology

2011 Decadal Study Concept –
MER-class rover + Fixed platform

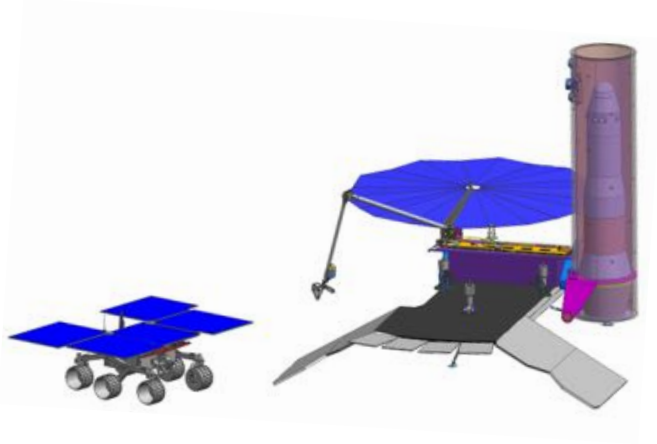

Mobile MAV Concepts –
MSL-class rover

Solar Mobile MAV

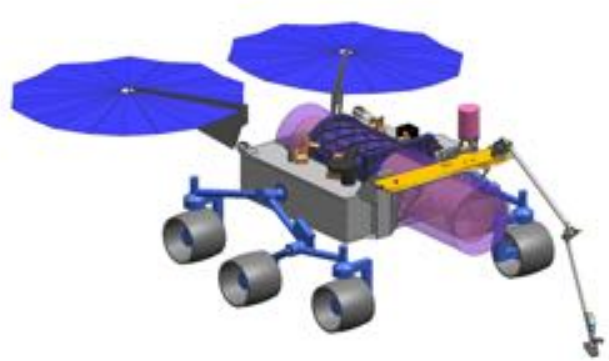

RTG Mobile MAV

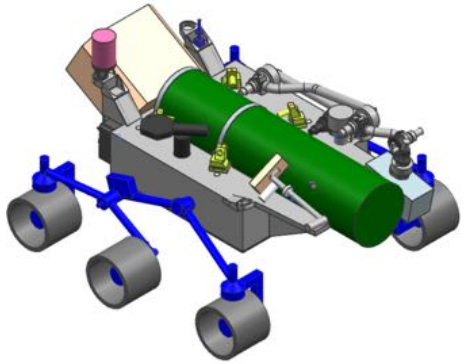

Example MAV (SSTO Hybrid)
Approx 2.8 m length; 280 kg mass

Other propellant options (solid, liquid) also under consideration

Design considerations and Drivers:

- Traverse distance
- Landing ellipse and hazard avoidance
- Sample Handling and Transfer
- MAV Launch
- Ancillary Objectives

Next Mars Orbiter (NeMO) Concept Overview

Jet Propulsion Laboratory
California Institute of Technology

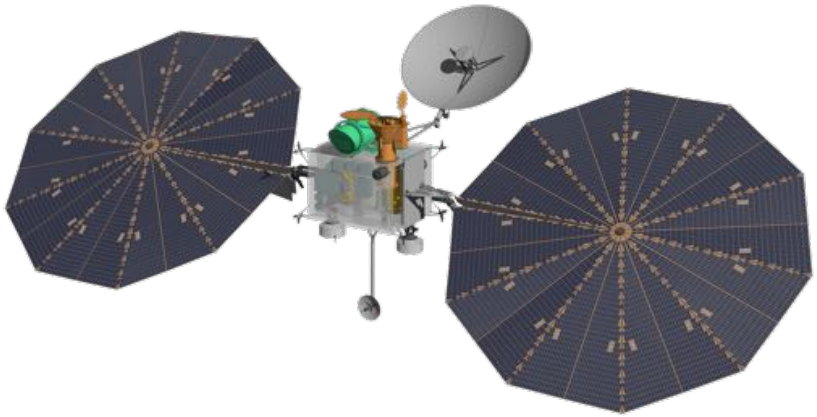

Objectives

- Renew and Update Aging Communications Infrastructure
- Provide Continuity of High Resolution Imaging
- Potential additional objectives for:
  - Orbital Support for Sample Return
  - Remote Sensing

Payload Overview

- High Resolution Imager (30 cm/pixel)
- Rendezvous and Capture payload
- Potential for additional observational instruments to be contributed by international partners

Falcon-9 or
Atlas V-411

Key Capabilities

- High-rate RF direct-to-earth telecom system
- X-band/UHF relay telecom system
- Advanced solar electric ion propulsion system
- Significant orbital flexibility for long term support of future missions

Flight System Characteristics

- Moderate Size Spacecraft (6.5 yr life)
- 1250 kg Bus
- 50 kg Payload (High Resolution Imager)
- 600 kg Propellants (~14 km/sec)
- Launch C3 = 15 km^2/s^2
- 20 kW Solar Arrays
- NEXT-C Ion Engines (1 active, 1 spare)

Mission Phase	Start Date
Launch	Jul 2022
Mars Capture Spiral	Sep 2023
Low Orbit Science	Jul 2024
Extended Mission Start	Apr 2028

Returned Sample Handling and Science Analysis Functions (example case)

Jet Propulsion Laboratory
California Institute of Technology

Notional Sample Receiving Facility (SRF)

- Contain samples as if potentially hazardous, equivalent to bio-safety level-4 (BSL-4).
- Keep samples isolated from Earth-sourced contaminants
- Provide capability to conduct biohazard test protocol as a prerequisite to release of samples from containment.

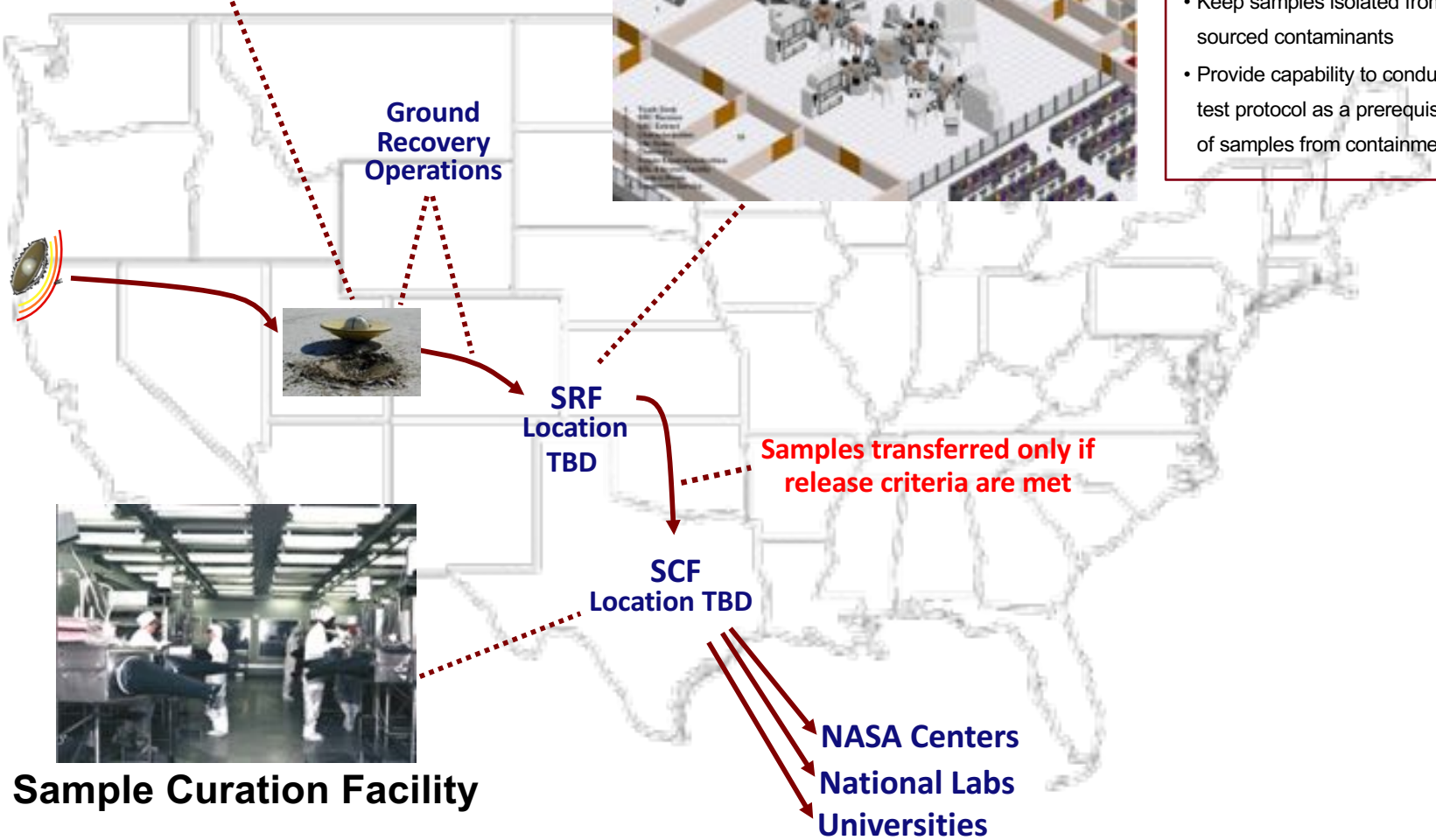

Mars Technology Development (MTD) Architecture

Jet Propulsion Laboratory
California Institute of Technology

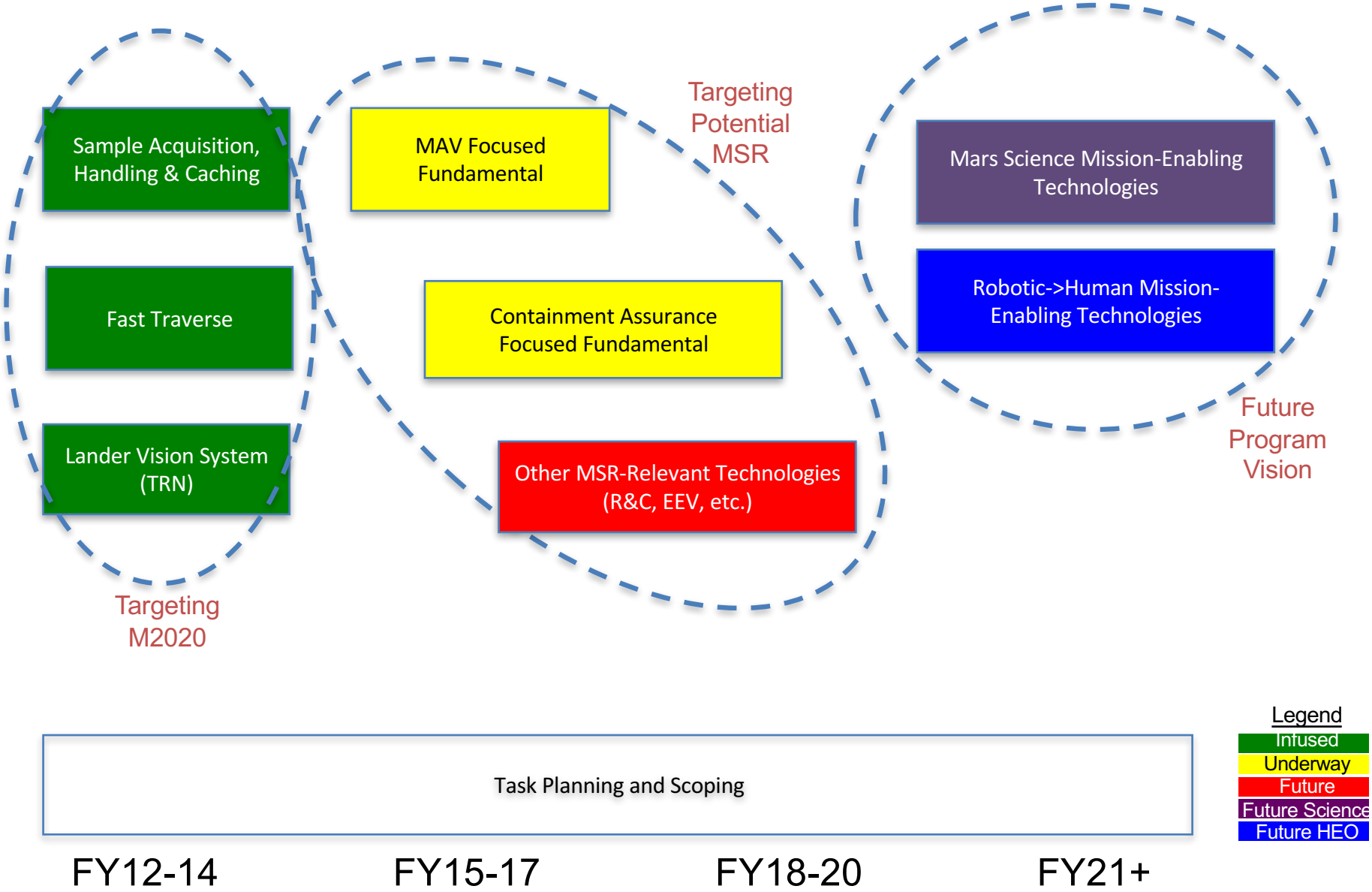

Recent MTD Infusion Successes

Jet Propulsion Laboratory
California Institute of Technology

Several key technologies have successfully infused to the Mars 2020 Rover mission

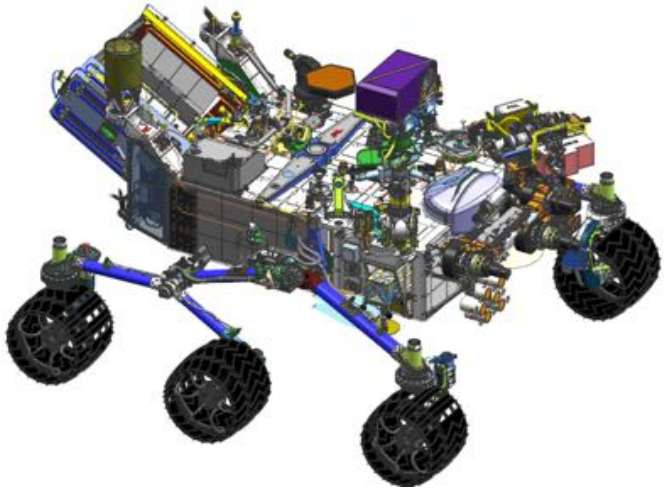

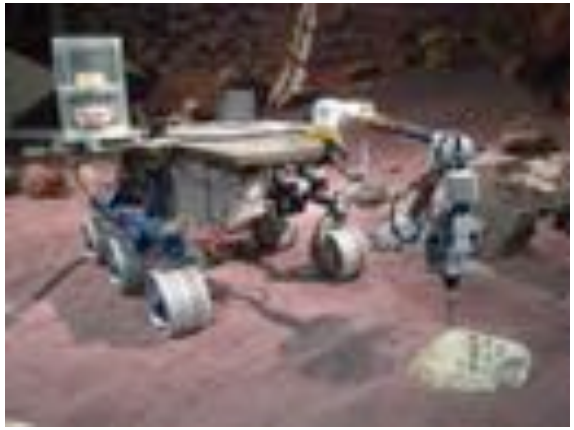

Sample Acquisition & Caching

Safe & Fast Traverse

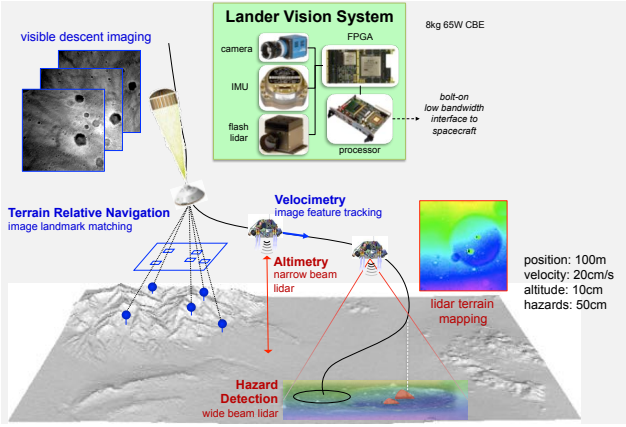

Terrain Relative Navigation

Current Mars Technologies Under Development

Jet Propulsion Laboratory
California Institute of Technology

Current portfolio is focused on key technologies for potential Mars Sample Return:

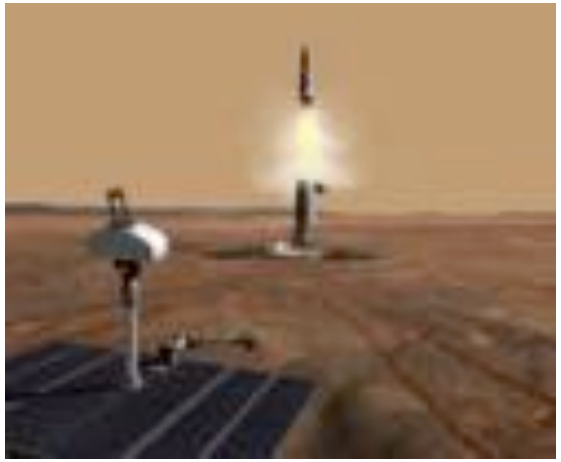

Mars Ascent Vehicle

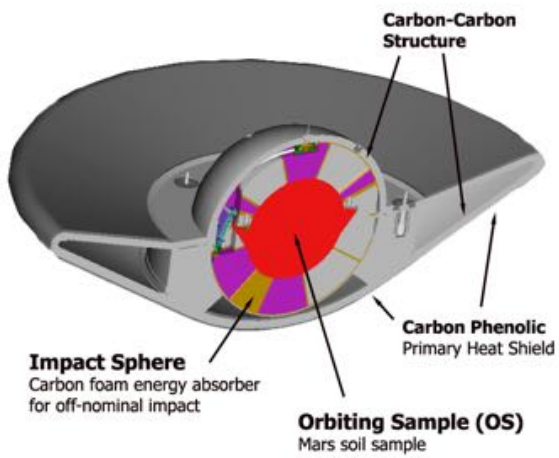

Break-the-Chain/Containment Assurance

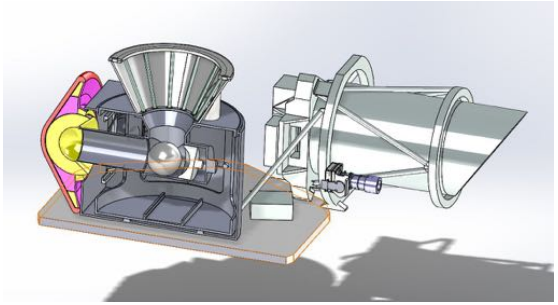

On-Orbit Sample Transfer

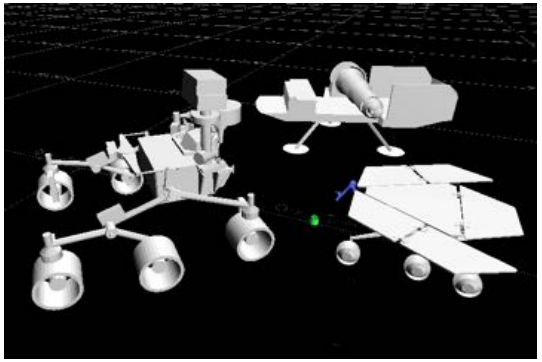

Surface Sample Transfer

Containment Assurance Fundamental Focused Technology

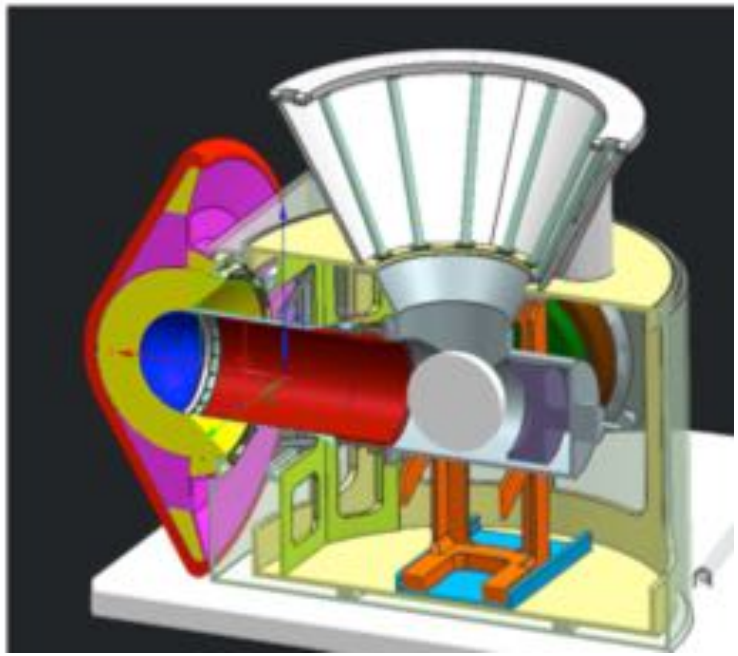

Objective

Develop capabilities needed to meet anticipated MSR sample containment assurance requirements

Draft requirement from NASA PPO:
$<10^{-6}$ probability of inadvertent release to Earth's biosphere of a single unsterilized Mars particle >50 nm

PI: Bob Gershman
Participating JPL Divisions: 31, 34, 35, 51
Facilities: Pyro Lab, Brazing Technology Lab

Funding Profile ($K):

FY15	FY16	FY17
$1445	$2566	$1787

Sample Containment Elements

Break-the-chain of contact with Mars
- Sample container sealing & separation
- Sample container sterilization
- Sealing verification, leak detection
- Dust mitigation, capture hardware jettison
- SRO divert

Containment maintenance during return & Earth entry/landing/handling
- Redundant robust containment
- Delivery to Earth entry corridor or LDRO
- Earth EDL system
  - Thermal/structural protection
  - Landing impact protection
- Meteoroid protection: Container & EEV
- Location, recovery, transport

→ **Clean, sealed sample container delivered to containment facility on Earth**

FY16/17 Objectives

- Accelerate focused development and downselect among scenarios and modalities.
- Downselect now targeted for mid to late November

Assumed schedule

- TRL-6 by PDR for 2022 launch (end of FY18)

The cost information contained in this document is of a budgetary and planning nature and is intended for informational purposes only.
It does not constitute a commitment on the part of JPL and/or Caltech.

New Technology Investment Directions

Jet Propulsion Laboratory
California Institute of Technology

Longer-term investment areas:

Extreme Terrain Access/
Special Regions Explorer

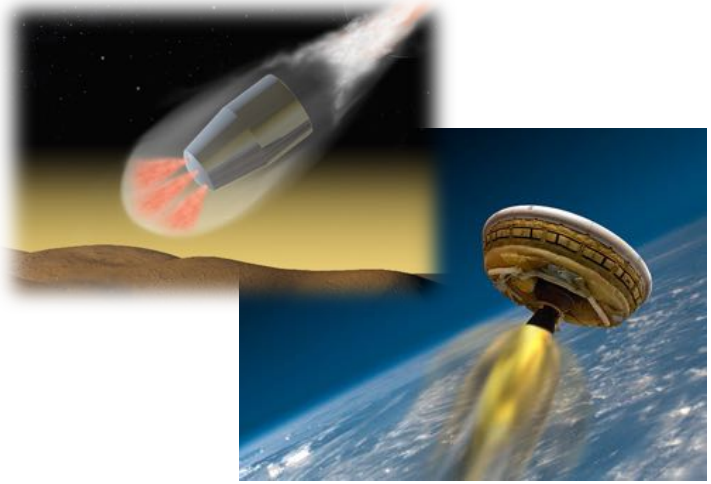

Advanced EDL

Aerial Platforms

Summary of Mission-Level PP Aspects and Needs

Jet Propulsion Laboratory
California Institute of Technology

Mission Concept	Key PP Aspects	Potential "Technology" Needs
Mars Sample Return Lander/MAV	Sample Contamination; Return Vehicle Contamination; Sterilization of "Special" Materials	Low-temperature sterilization methods (suitable for solid rocket and hybrid rocket fuels)
Mars Sample Capture/Encapsulation Orbiter (no Earth Return Capability)	Sample Contamination; Return Vehicle Contamination; Containment Assurance	On-orbit dust modeling/mitigation BTC sealing/sterilization methods On-orbit containment assurance V&V Orbital debris/micrometeoroid risk characterization Probabilistic risk analysis Earth entry go/no-go protocol
Mars Sample Return Orbiter (EEV or other Earth Return equipment)		
Mars Returned Sample Handing (ground)	Sample Contamination; Containment Assurance	(See slide (upcoming) summarizing results of 2011 MRSH Technology Readiness Study)
Mars Special Regions Explorer	In-situ Instrument Contamination; Terrestrial Contamination	Modeling of Special Region soil dynamics in presence of water and heat sources Whole-vehicle sterilization methods In-situ instrument cleaning/sterilization

Sample Contamination

- Substantial work underway to address this in context of M2020 sample collection and caching operations
- Anticipating that some technologies/techniques developed for M2020 will be applicable to downstream missions for maintaining:
  - Scientific integrity
  - Sample cleanliness
  - Containment assurance
- More on this topic in today's presentation by Melissa Jones

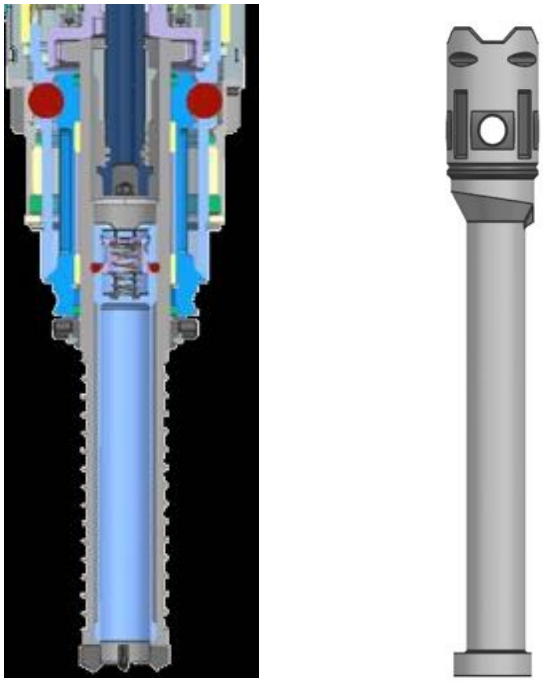

Concepts for M2020 sample coring system (l) and sample tube (r)

February 2016 Atelier study at JPL

Jet Propulsion Laboratory
California Institute of Technology

- Focused on architecting and conceptual design of MSR Rendezvous & OS Capture (ROCS) system
- Addressed several topics directly pertinent to sample return planetary protection
  - OS and OS local environment cleaning prior to capture
  - Spacecraft dust protection
  - BTC via OS cleaning/sterilization/encapsulation
  - Contaminated equipment jettison prior to Mars departure
  - Earth return equipment protection during Earth return operations
- See storyboard on next two slides

Configuration A - Steps

Spacecraft View

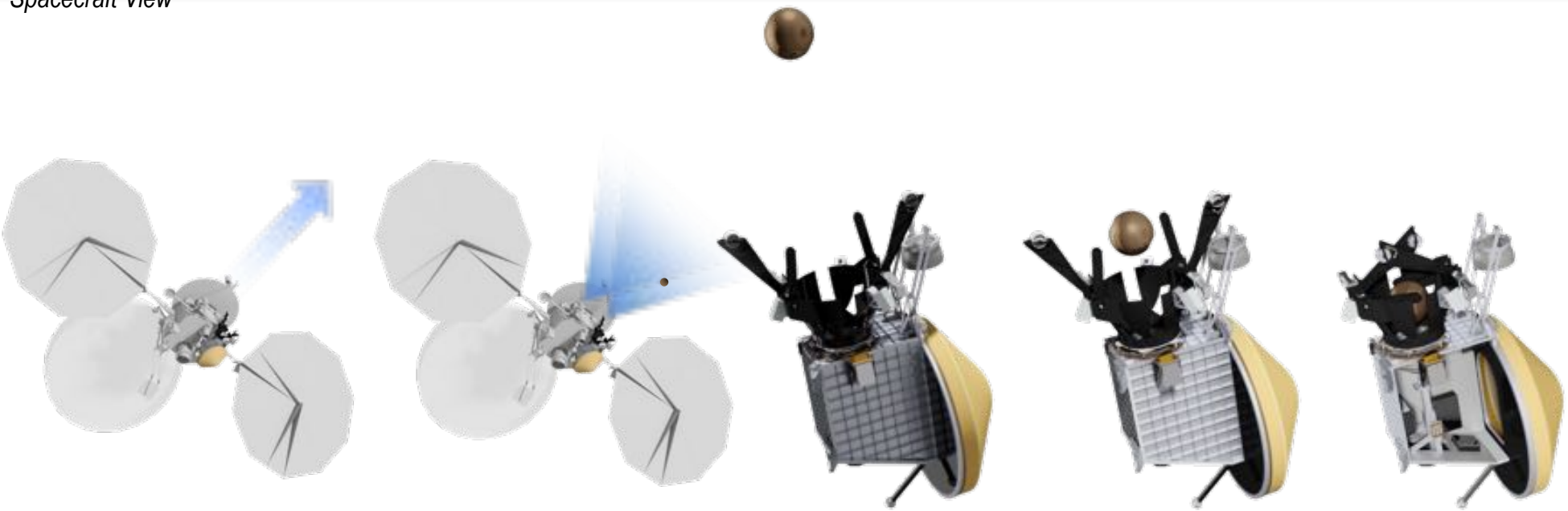

1. Sensing and rendezvous

1. Long Distance
2. Med Distance
3. Short Distance

2. OS Capturing

1. Arm Opening
2. SEP Blow-Off
3. Final Approach
4. Closing Arms
5. Arms closed, OS captured

Configuration A - Steps

Spacecraft View

3. Break The Chain

1. Release Cone
2. Close Lid with cover
3. Brazing
4. Detachment
5. Cool down temperature (check time to get to 100C)

4. Containment Assurance and Stowage

1. Translation
2. Rotation
3. Translation (inside delivery)
4. Knife edge and latching (containment assurance)

5. Return Cruise

Containment Assurance Elements

Jet Propulsion Laboratory
California Institute of Technology

Break-the-chain of contact with Mars

- Sample container sealing & separation
- Sample container sterilization
- Sealing verification, leak detection
- Dust mitigation, capture hardware jettison
- SRO divert

Containment maintenance during return & Earth entry/landing/handling

- Redundant robust containment
- Delivery to Earth entry corridor or LDRO
- Earth EDL system
  - Thermal/structural protection
  - Landing impact protection
- Meteoroid protection: Container & EEV
- Location, recovery, transport

→ **Clean, sealed sample container delivered to containment facility on Earth**

Break-the-Chain Technologies

Jet Propulsion Laboratory
California Institute of Technology

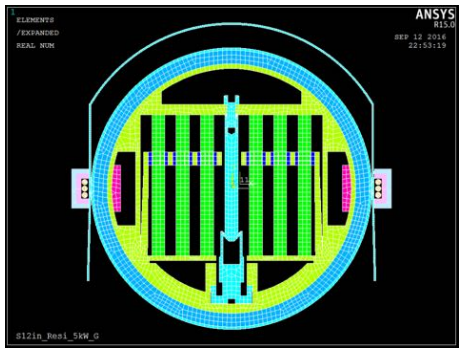

Brazing

Explosive Welding

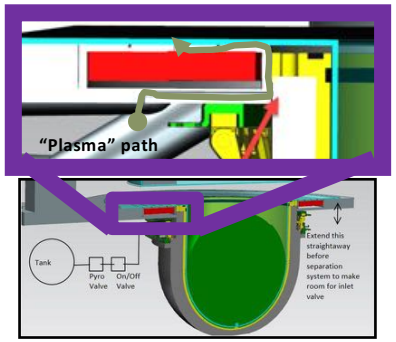

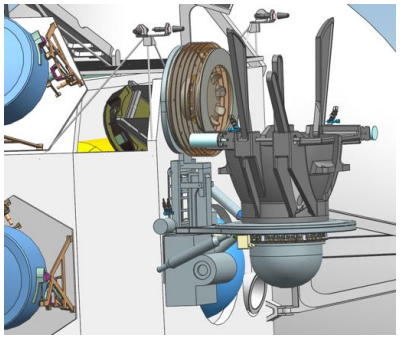

Bagging w/ Plasma Sterilization

Focusing effort on maturing technologies to enable downselect in late CY16 →
Enables transition to flight implementation in second half on FY17

Objective: *Calculate contamination of SRO/EEV by Martian dust*

- **Current study**:
  - OS-SRO rendezvous occurring after **5-8 weeks** of OS orbit time→Analytical modeling
  - Last report: analytical estimate of average number of collisions with dust cloud
    - Particles all 0.3-µm in diameter – overestimates drift of full population
    - *Now*: Size distribution of particles based on observations in Mars atm.

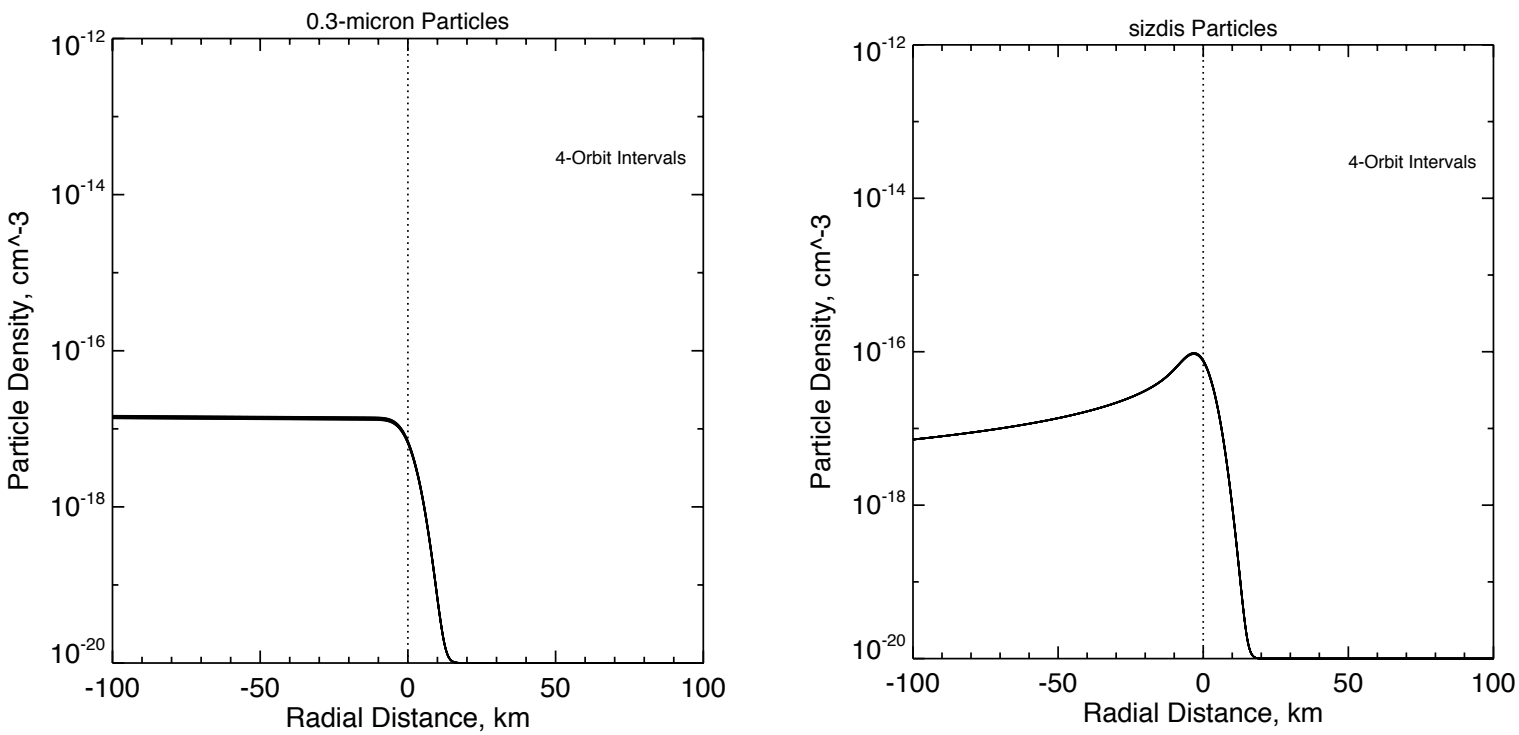

Azimuthal-mean particle density versus radial distance from OS jettison radius, between OS orbit numbers 486 and 526. **Left:** 0.3-µm radius particles only. **Right:** Full size distribution estimated to be on OS. Density somewhat higher near 0 km radius for variable-size case. 0.1 s^{-1} particle emission rate assumed (~MSX).

A. James Friedson 9-19-2016

Objective: *Calculate contamination of SRO/EEV by Martian dust*

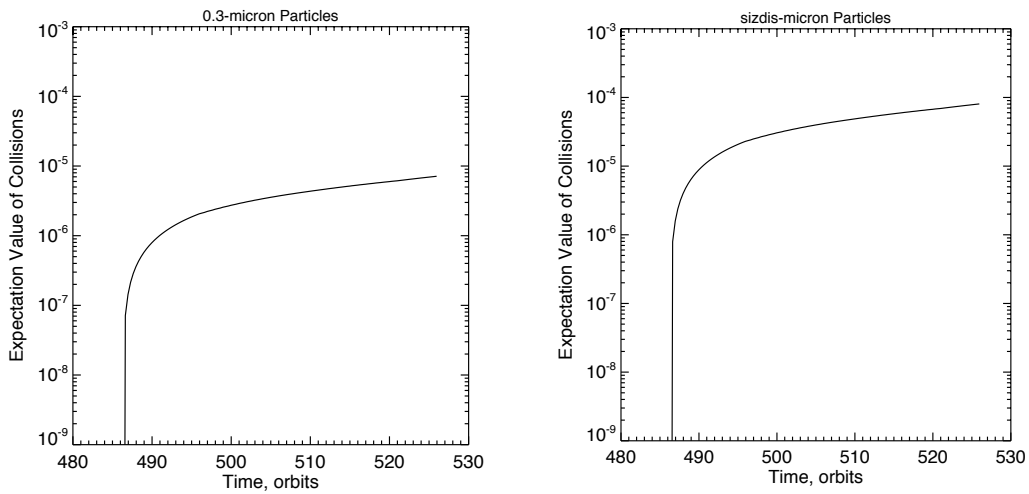

Expectation value for collision based on cloud density profiles shown on slide 1. **Left:** 0.3-micron particles only. **Right:** Full size distribution. Collision probability increases when larger particles are included, since drag removes them less efficiently.

TO DO:

- Create a more realistic model of SRO trajectory through cloud
- Explore mitigation of dust contamination (using the new design for ion-propulsion thruster)
- Bring together results for near-field and far-field (this work) particle-collision risks
- Produce summary report and *get review*
- This will represent reference model –> Next: Propose experiments/theory to better constrain "spontaneous" particle release rates from spacecraft in Mars environment

A. James Friedson 9-19-2016

MRSH Technology Readiness (2011 Workshop)

Jet Propulsion Laboratory
California Institute of Technology

Technology Category	Method	TRL level	Relevent technology	$-$$$ to reach TRL 6	Priority (1-4)
Contained Sample Transport	Similar to Biohazard Transport	TRL 5	Biohazard transport	$	4
Sample Containment	Double Wall Vessel	TRL 2		$$$	1
	Sample Distribution Ports	TRL 3		$$	2
	Robotic Sample Handling	TRL 4		$$$	1
	Sample Storage and Curation	TRL 5	CF	$	3
	Mars Sample Sterilization	TRL 4	PP heritage*	$$	4
Contamination Avoidance	Sterilization	TRL 3	PP heritage	$$$	1
	Cleaning (Vessels and Hardware)	TRL 3	PP heritage	$$$	1
	Personnel Protective Gear	TRL 4	BSL 4	$	4
	Glove Box, Clean Barrier	TRL 3	PP heritage, BSL 4, CF	$$	2
	Cross Contamination Risk Analysis	TRL 2	PP heritage	$	3
Instrument Containment Accommodation		TRL 2	PP heritage	$$	4

Summary

- Near-term Mars missions thinking dominated by a potential Mars Sample Return (MSR) Mission
- Potential MSR would almost certainly be a Category V Restricted Earth Return per NPR 8020.12D and the MSR mission architecture and element design would be strongly driven by PP considerations
- A variety of PP-related technologies would be needed across the various MSR mission elements
  - Some (e.g., sealing and sterilization technologies, containment systems) are already under development using MTD funding
  - Others would be funded under mission-level funding (or other)
- This presentation attempts to summarize the Mars mission context and the key PP technology needs from a Mars Exploration Program perspective
- Recommend a follow-up discussion to integrate PP technology needs at the PSD level and to better understand where funding gaps and potential intra-division collaboration opportunities might exist

Backup

Mars 2020 Mission Overview

LAUNCH

- MSL Class/Capability LV
- Period: Jul/Aug 2020

CRUISE/APPROACH

- 7.5 month cruise
- Arrive Feb 2021

ENTRY, DESCENT & LANDING

- MSL EDL system (Range Trigger and TRN baselined): guided entry and powered descent/Sky Crane
- 16 x 14 km landing ellipse (range trigger baselined)
- Access to landing sites ±30° latitude, ≤ -0.5 km elevation
- Curiosity-class Rover

SURFACE MISSION

- 20 km traverse distance capability
- Enhanced surface productivity
- Qualified to 1.5 Martian year lifetime
- Seeking signs of past life
- Returnable cache of samples
- Prepare for human exploration of Mars

Mars 2020 Project Overview

Salient Features

- *High heritage MSL design*
- *Modifications only as necessary to accommodate new payload and Sampling / Caching System (SCS)*

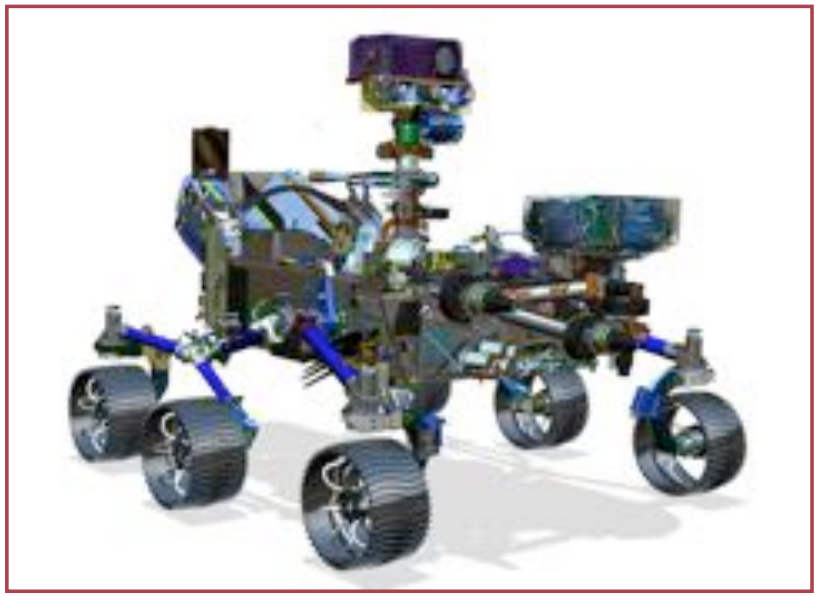

Science

- *Assess past habitability of an astrobiologically relevant ancient environment on Mars*
- *Assess biosignature preservation potential with the environment and search for biosignatures*
- *Assemble cached samples for possible future return to Earth*
- *Provide an opportunity for contributed HEO/STMD participation to advance technologies with potential applications to future human exploration objectives*

MSL/M2020 Cruise and EDL System

Jet Propulsion Laboratory
California Institute of Technology

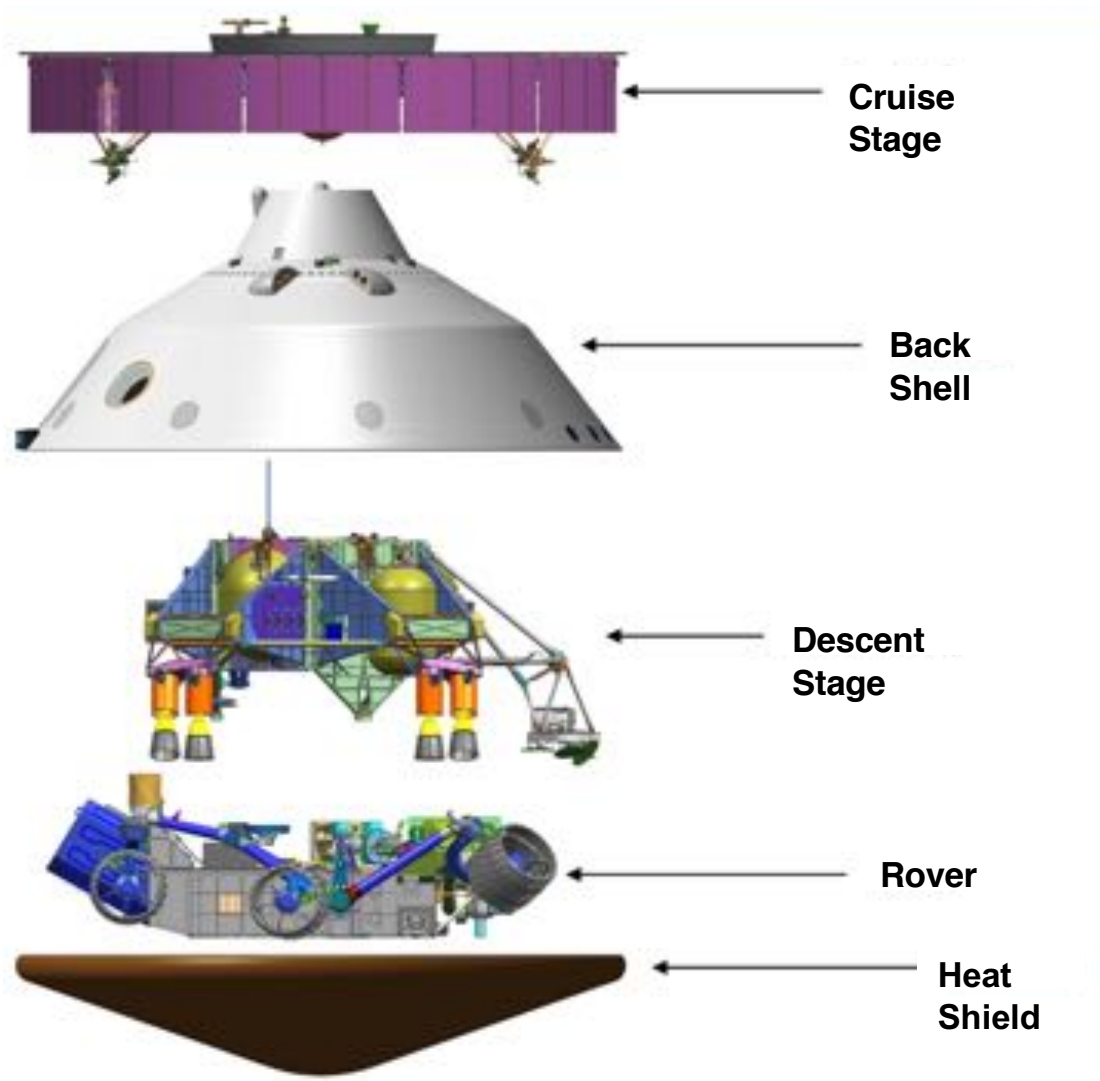

Sample Caching – Then vs. Now

Jet Propulsion Laboratory
California Institute of Technology

Decadal Survey: MAX-C

300 kg, solar power (15S-25N), MER-class instruments for sample triage

Two Caches (redundant)

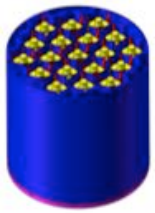

~20 samples
(each)

Mars 2020

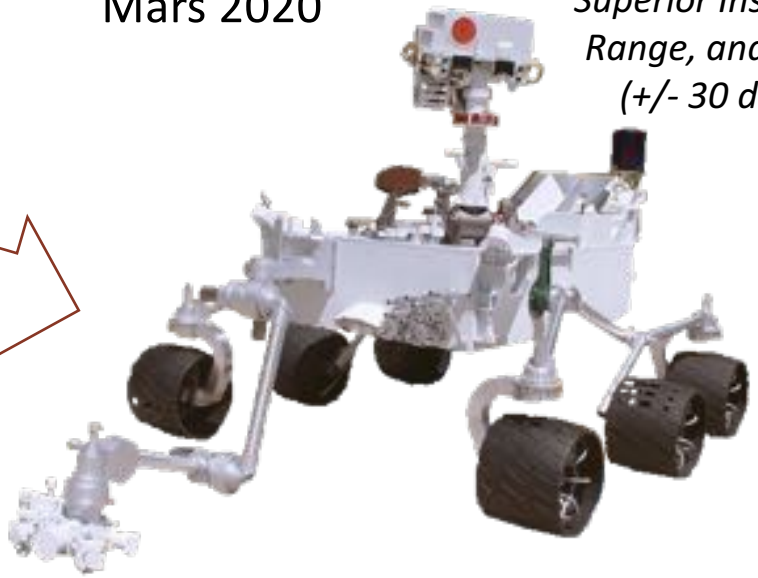

Superior Instruments, Range, and Latitude (+/- 30 degrees)

31 Individual Samples @ one or more pickup locations

NeMO Concept Deployed Configuration

Jet Propulsion Laboratory
California Institute of Technology

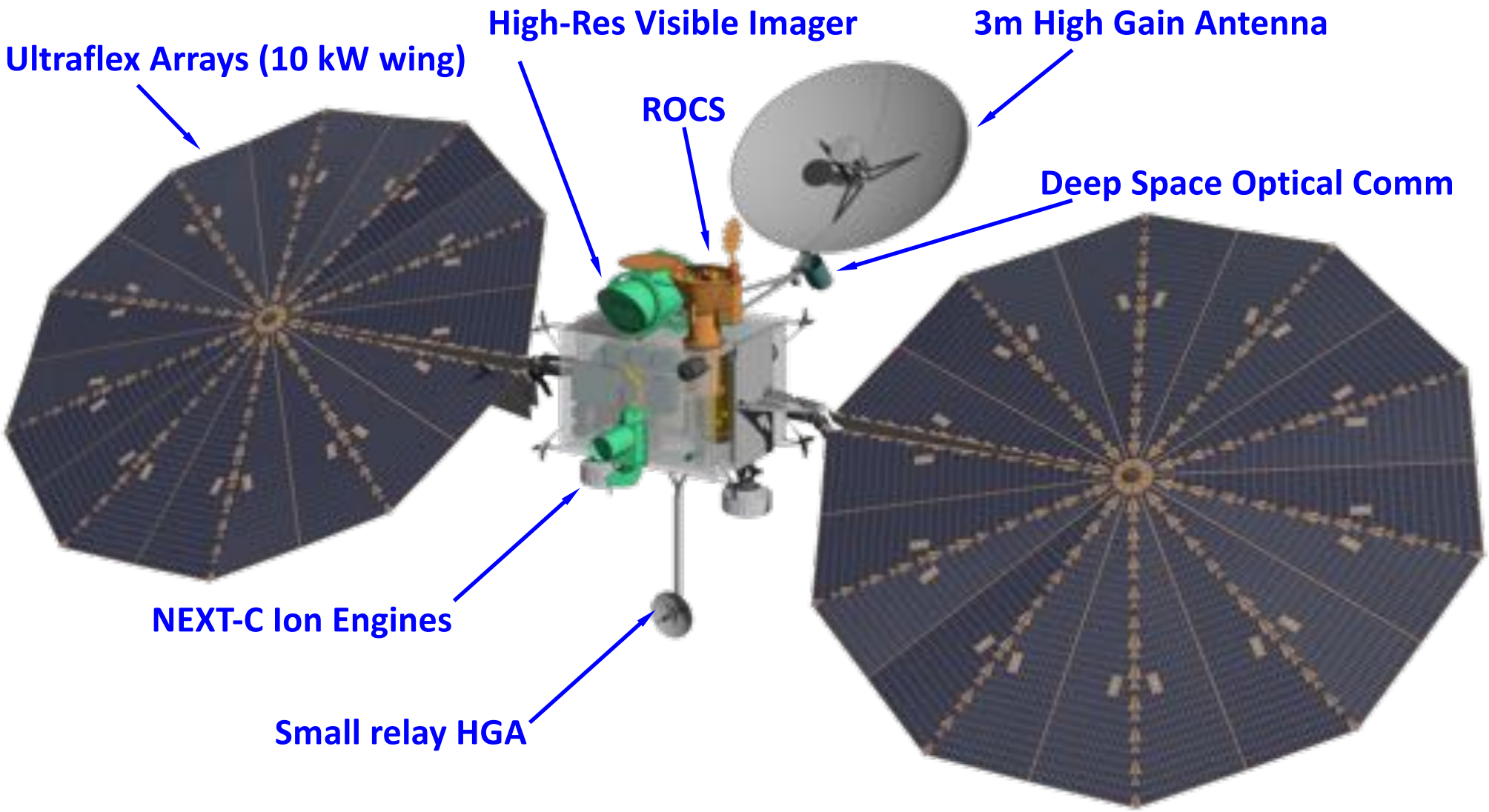

Current OS Design Concept

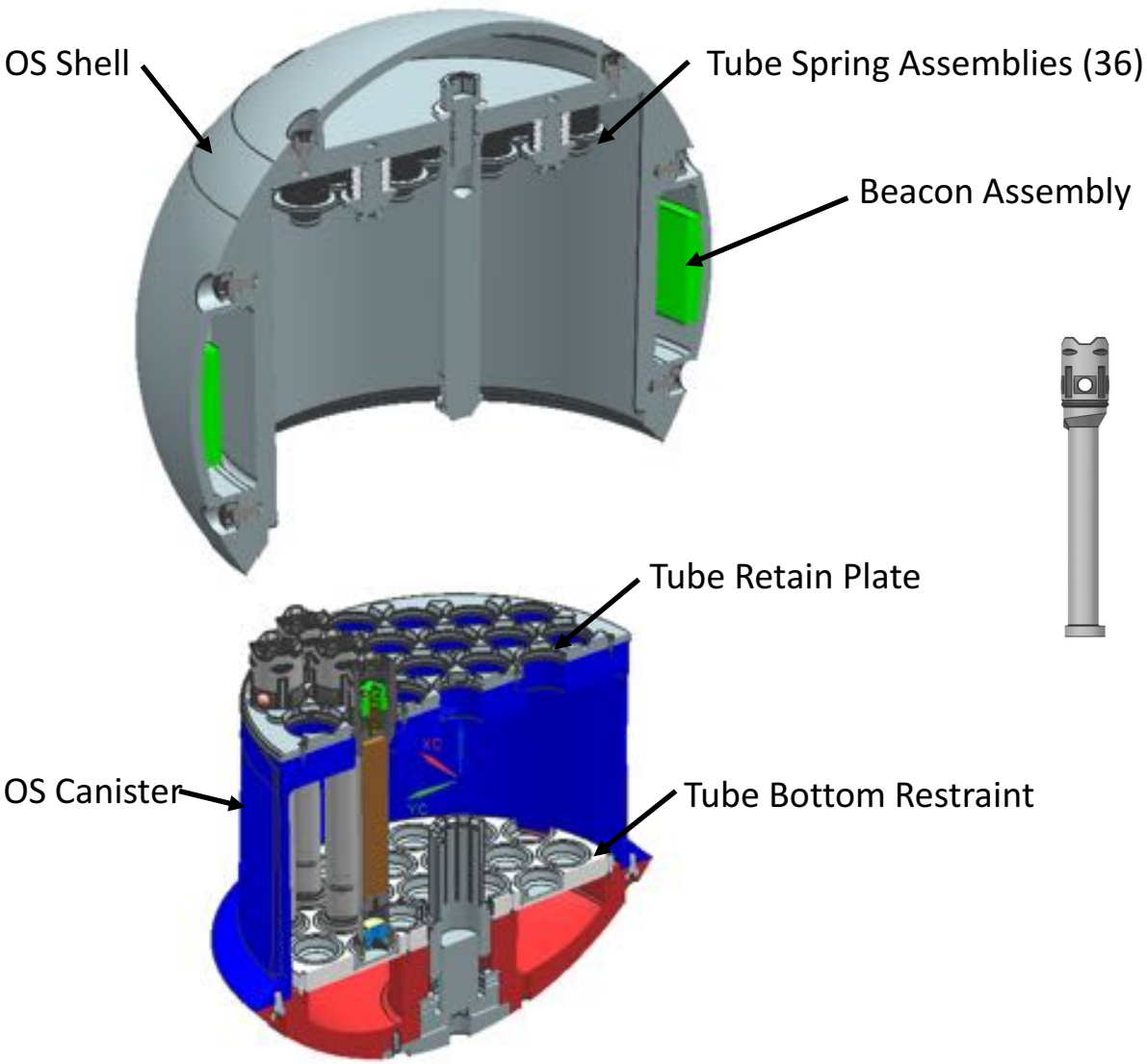

- 27 cm OD Sphere
- Less than 12 kg
- Accommodates 31 sample tubes
- Capable of accommodating:
  - Air Samples
  - Tracking Beacon

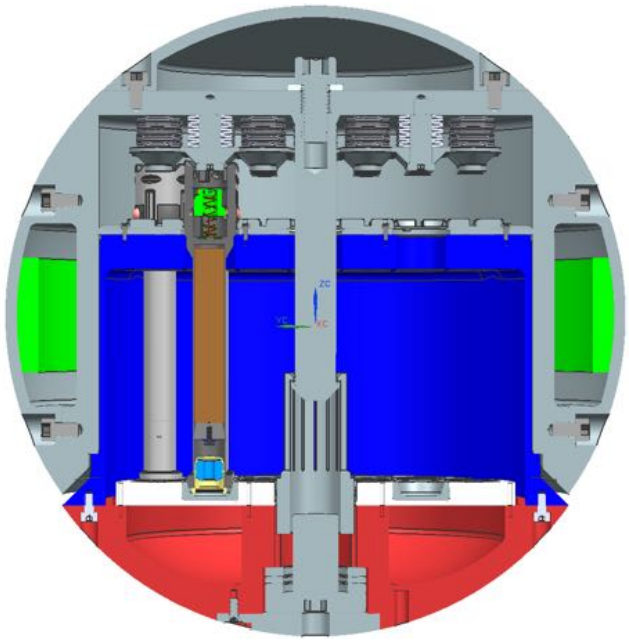

Earth Return -- Concept for Direct EEV Option

Jet Propulsion Laboratory
California Institute of Technology

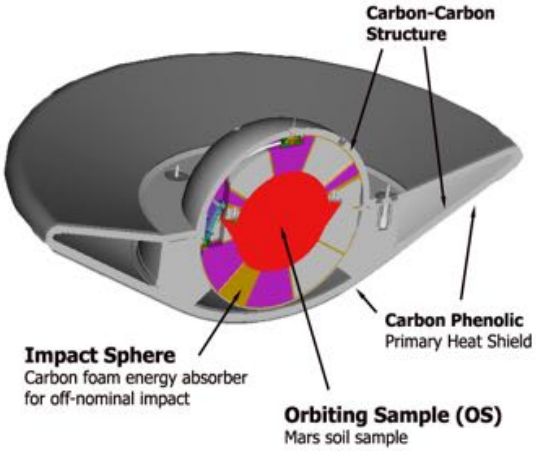

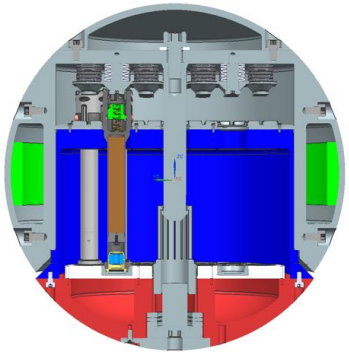
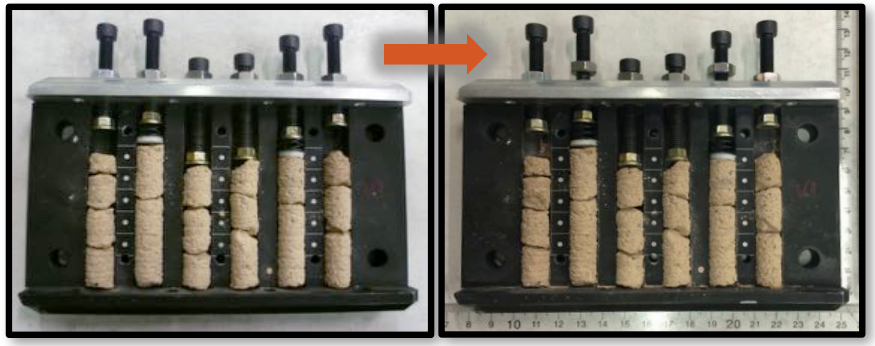
Drop #1, Vertical Orientation, 3000 g's, Before + After