# JPL's Foundry Furnace:
# Web-based Concurrent Engineering for Formulation

Jonathan Murphy (Jonathan.Murphy@jpl.nasa.gov)
Jon Blossom, Garrett Johnson, Mike Kolar, Jim Chase, Kelley Case

Jet Propulsion Laboratory
California Institute of Technology

SECESA 2016, Madrid, Spain

# Introduction

Jet Propulsion Laboratory
California Institute of Technology

"JPL is the leading U.S. center for robotic exploration of the solar system, and has 19 spacecraft and 10 major instruments carrying out planetary, Earth science and space-based astronomy missions."

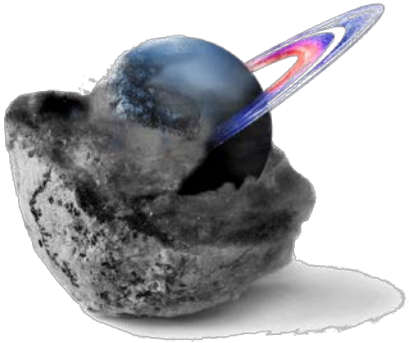

## JPL Innovation Foundry

"JPL Innovation Foundry coordinates and provides leadership for all JPL activities associated with the development and capture of business opportunities."



Copyright 2016 California Institute of Technology. Government sponsorship acknowledged.

# JPL's Formulation Teams

**Concept Maturity Level**

CML 1: "Cocktail Napkin"

CML 2: "Initial Feasibility"

CML 3: "Trade Space"

CML 4: "Point Design"

CML 5: "Baseline Concept"

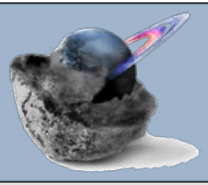

JPL's **Innovation Foundry** shepherds mission concepts through the formulation process.

**The A-Team**: workshop-like architecture studies

- Focus science investigations
- Generate mission concepts
- Assess feasibility
- Explore trade spaces

**Team X**: 20+ year old Concurrent Engineering team

- Feasible point design
- Reasonable cost estimate

**Team Xc**: Similar to Team X, but for Cubesats and Smallsats

**Proposal Teams**

Each mission concept being proposed to NASA will have a standing team of scientists, engineers, and documentarians.



Copyright 2016 California Institute of Technology. Government sponsorship acknowledged.

# Current Software Infrastructure

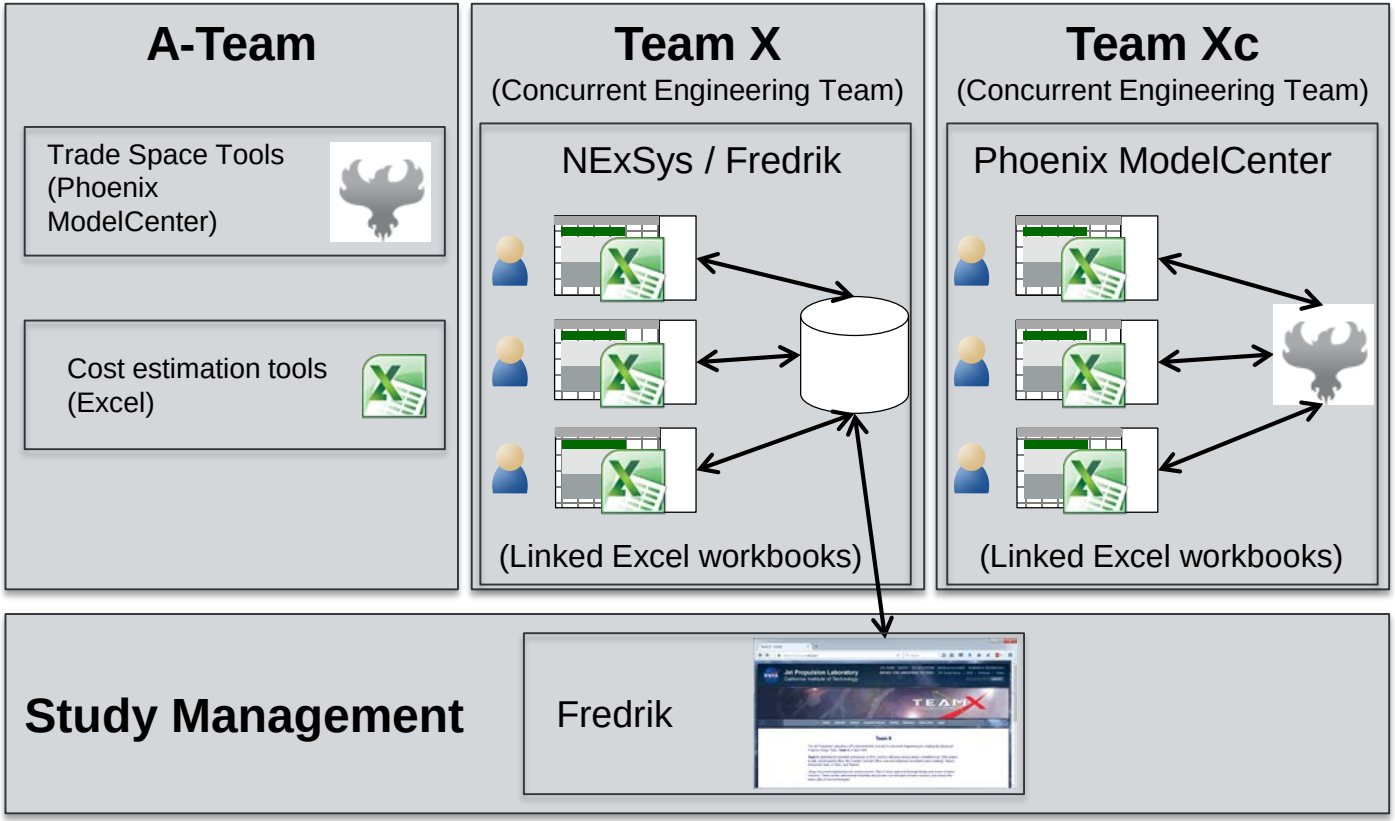




Copyright 2016 California Institute of Technology. Government sponsorship acknowledged.

# Future Software Infrastructure: “Foundry Furnace”

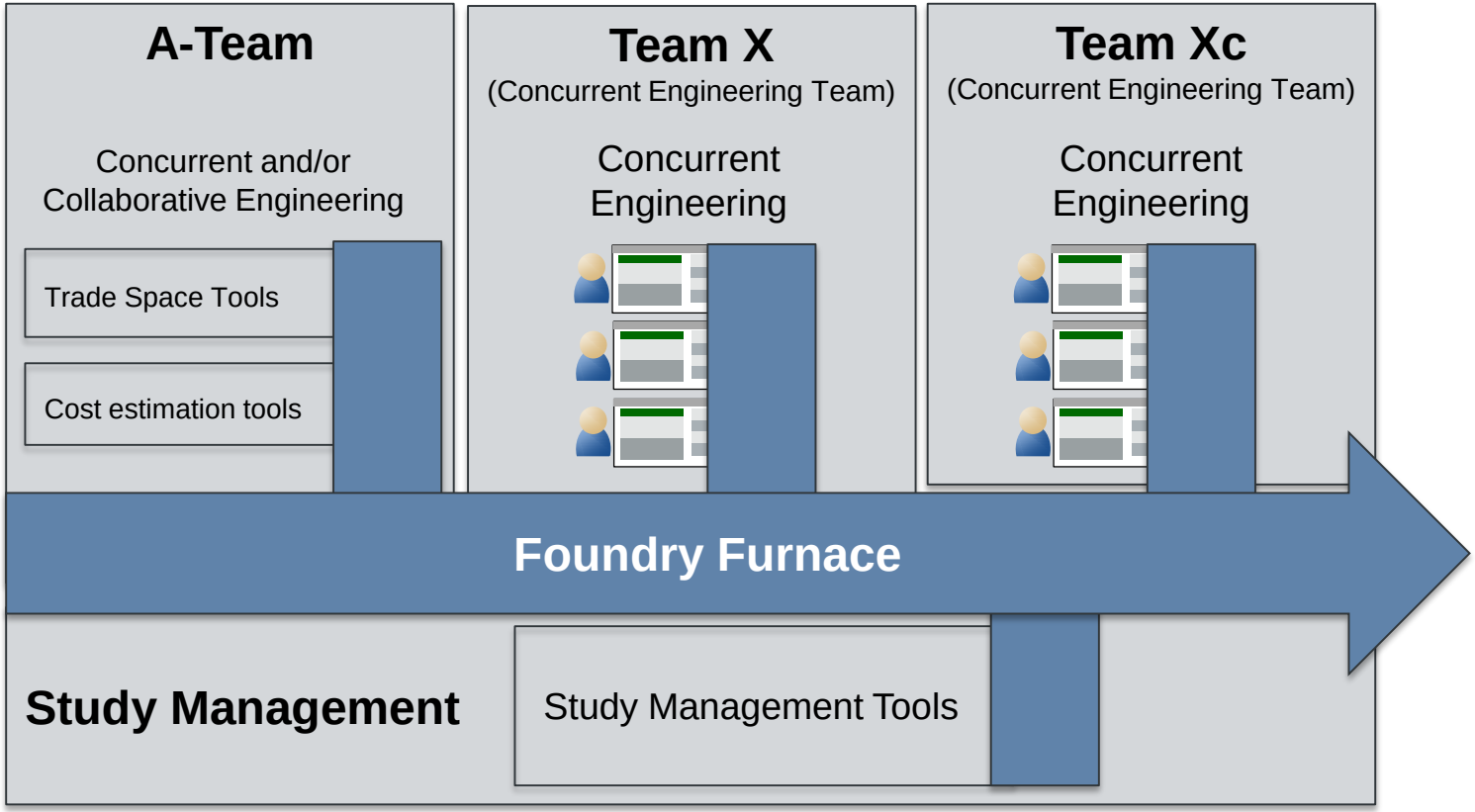




Copyright 2016 California Institute of Technology. Government sponsorship acknowledged.

# Why Change?

| Current Infrastructure | Foundry Furnace |
|---|---|
| **"Silos":** Teams start from scratch at every phase in formulation process | **Continuity**: Hand off models from one phase to the next, including export to SysML for implementation teams |
| Separate concurrent infrastructures to support Team X and Team Xc. | **Continuity:** Single infrastructure to support A-Team, Team X, Team Xc |
| Limited to Excel | **Adaptability**: Support multiple analysis applications, including Excel, Python, MATLAB... |
| Fixed set of integrated analyses and exchanged parameters. Slowly evolves over time. | **Adaptability:** Allow new analyses to solve new problems. Uses an expandable descriptive model. |
| Any new analysis, to solve a new problem, remains un-integrated and difficult to re-use. | **Re-Usability:** Allow re-use of any analysis across CMLs and studies. |


Copyright 2016 California Institute of Technology. Government sponsorship acknowledged.

# What’s Different?

- Web-based architecture
  - → Use any supported analysis application
  - → Use on any computer, and outside of concurrent session
- Multiple analysis applications
  - Non-Excel applications can be integrated, remain traceable
  - Three tiers of integration: White Box, Black Box, Federated

- An expressive central data model - MBSE
- Query-based linking
- Re-usable libraries


Copyright 2016 California Institute of Technology. Government sponsorship acknowledged.

# We use Model-Based Systems Engineering...

... but not SysML

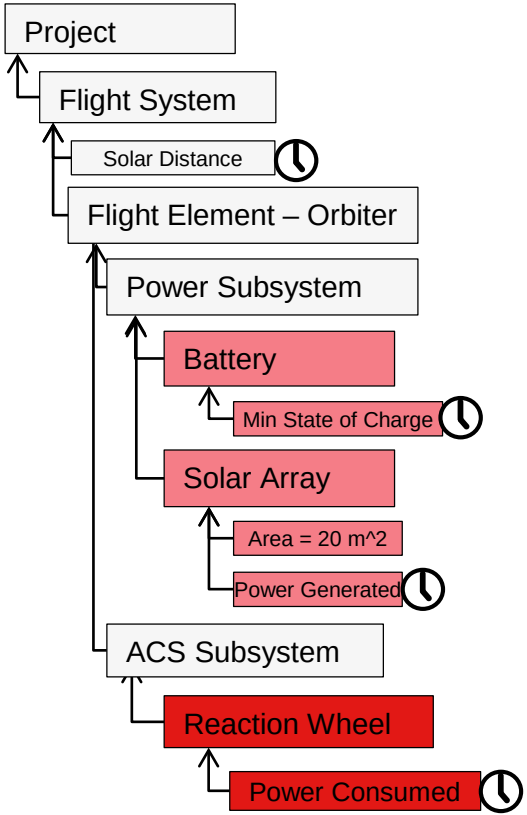


- Structured composition
- Type inheritance
- Analysis
- Options
- State and Time

- Enables a **Consistent ontology**
  - which enables **Query-based linking**



Copyright 2016 California Institute of Technology. Government sponsorship acknowledged.

# Query-based Linking allows flexibility

- Current infrastructure: “hard-wired” subsystem design workbooks
  - Each can internally model a wide range of subsystem designs
  - Relies on fixed “interfaces” between subsystem
  - → Cannot change a subsystem interface on short notice
- This has worked pretty well... but it has limitations
  - What if you want to add a new analysis?
  - What if you want to pass new information from one subsystem to the next?
- With a structured model, we can move the integration from *model authoring* time to *model use* time
  - Query-based linking: Each analysis knows how to find its inputs in the model
  - “Find me all solar arrays in this flight element”
  - Can co-exist with manual links


Copyright 2016 California Institute of Technology. Government sponsorship acknowledged.

# Re-usable Libraries help avoid wasted effort

Re-usable libraries allow re-use of design data across studies, design phases, and analyses, as well as for use outside of formulation

- **Common Resources:** units and ontology definition
- **Hardware Catalog:** hardware components and technologies
- **Design Templates:** starting templates for studies, composed fragments of a design
- **Domain Models:** analyses and design models
- **Missions and Cost**: flown and proposed missions, their technical parameters and costs


Copyright 2016 California Institute of Technology. Government sponsorship acknowledged.

# The Furnace Architecture

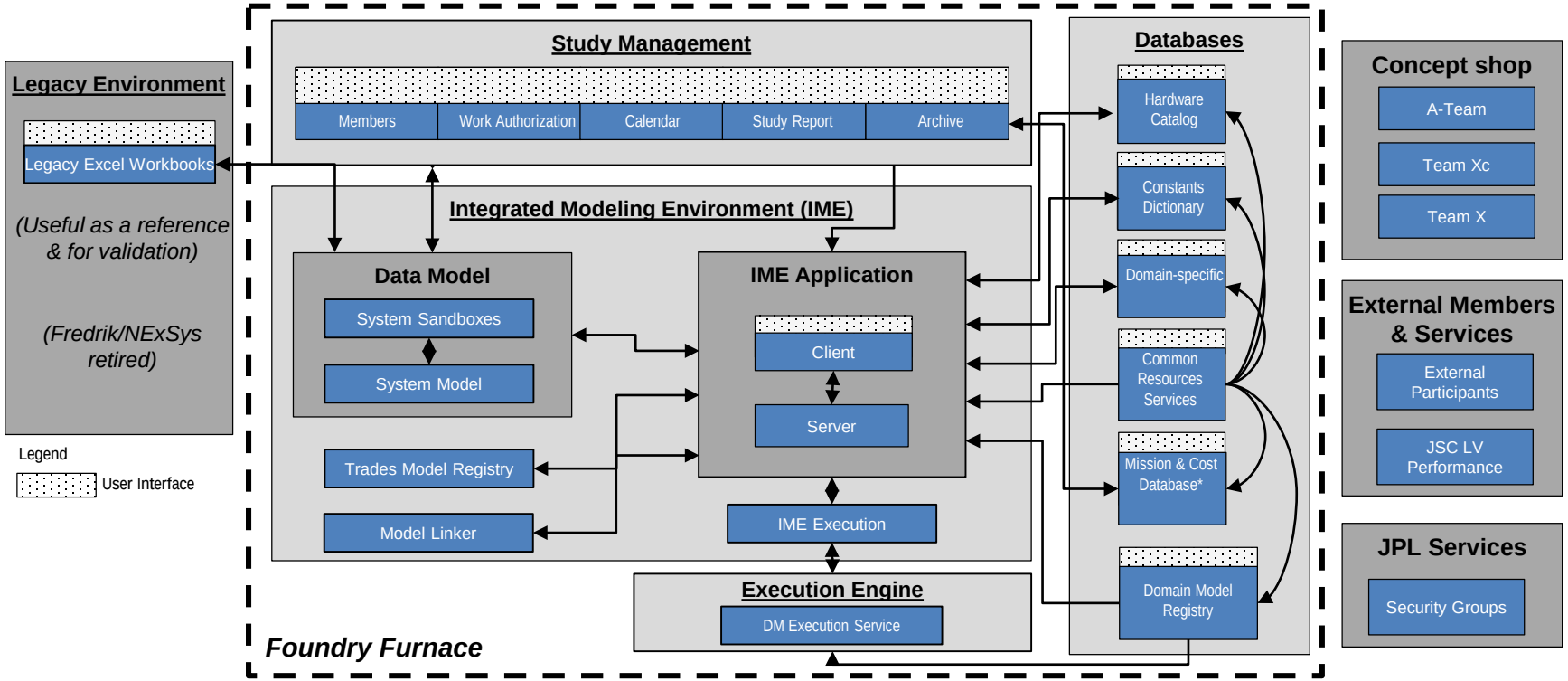




Copyright 2016 California Institute of Technology. Government sponsorship acknowledged.

# Supporting Legacy Tools

- Team X and Team Xc have a large set of design and cost models that have been developed over many years
- We cannot hope to transition them all to the Furnace overnight, and we have to remain operational
- We will phase out the existing workbooks over a period of several years

- **Furnace will allow backward compatibility with existing Team X and Team Xc Excel workbooks**


Copyright 2016 California Institute of Technology. Government sponsorship acknowledged.

# Conclusions

- Foundry Furnace is a re-imagining of JPL's formulation infrastructure
  - *Adaptable* to support new designs and analyses
  - Makes designs and analyses *re-usable*
  - Provides *continuity* across the formulation lifecycle
  - Uses a modern service-oriented, web-based approach
  - Uses concepts from modern MBSE

- Full transition will take time and patience


Copyright 2016 California Institute of Technology. Government sponsorship acknowledged.

# Acknowledgements


- JPL Innovation Foundry
- Foundry Modernization team
- JPL Project Systems and Formulation Section (312)
- JPL Integrated Model-Centric Engineering Office (IMCE)

This research was carried out at the Jet Propulsion Laboratory, California Institute of Technology, under a contract with the National Aeronautics and Space Administration.



© 2016 California Institute of Technology. Government sponsorship acknowledged.




Copyright 2016 California Institute of Technology. Government sponsorship acknowledged.

Jet Propulsion Laboratory
California Institute of Technology

jpl.nasa.gov