Large-Area Arrays of WSi Superconducting Nanowire Single Photon Detectors

F. Marsili[1], M. D. Shaw[1], A. D. Beyer[1], R. Briggs[1], G. V. Resta[1], J. A. Stern[1], V. B. Verma[2], R. P. Mirin[2], S. W. Nam[2], P. Ravindran[3], S. Chang[3], J. Bardin[3], D. S. Russel[1], and W. H. Farr[1]

[1]*Jet Propulsion Laboratory, California Institute of Technology, 4800 Oak Grove Dr., Pasadena, California 91109, USA*

[2]*National Institute of Standards and Technology, 325 Broadway, MC 815.04, Boulder, CO 80305, USA*

[3]*University of Massachusetts, Amherst MA 01003-9292, USA*

fmarsili@jpl.nasa.gov

© 2016 California Institute of Technology. All rights reserved.
The work described here was performed at the Jet Propulsion Laboratory (JPL), California Institute of Technology under contract with the National Aeronautics and Space Administration (NASA).

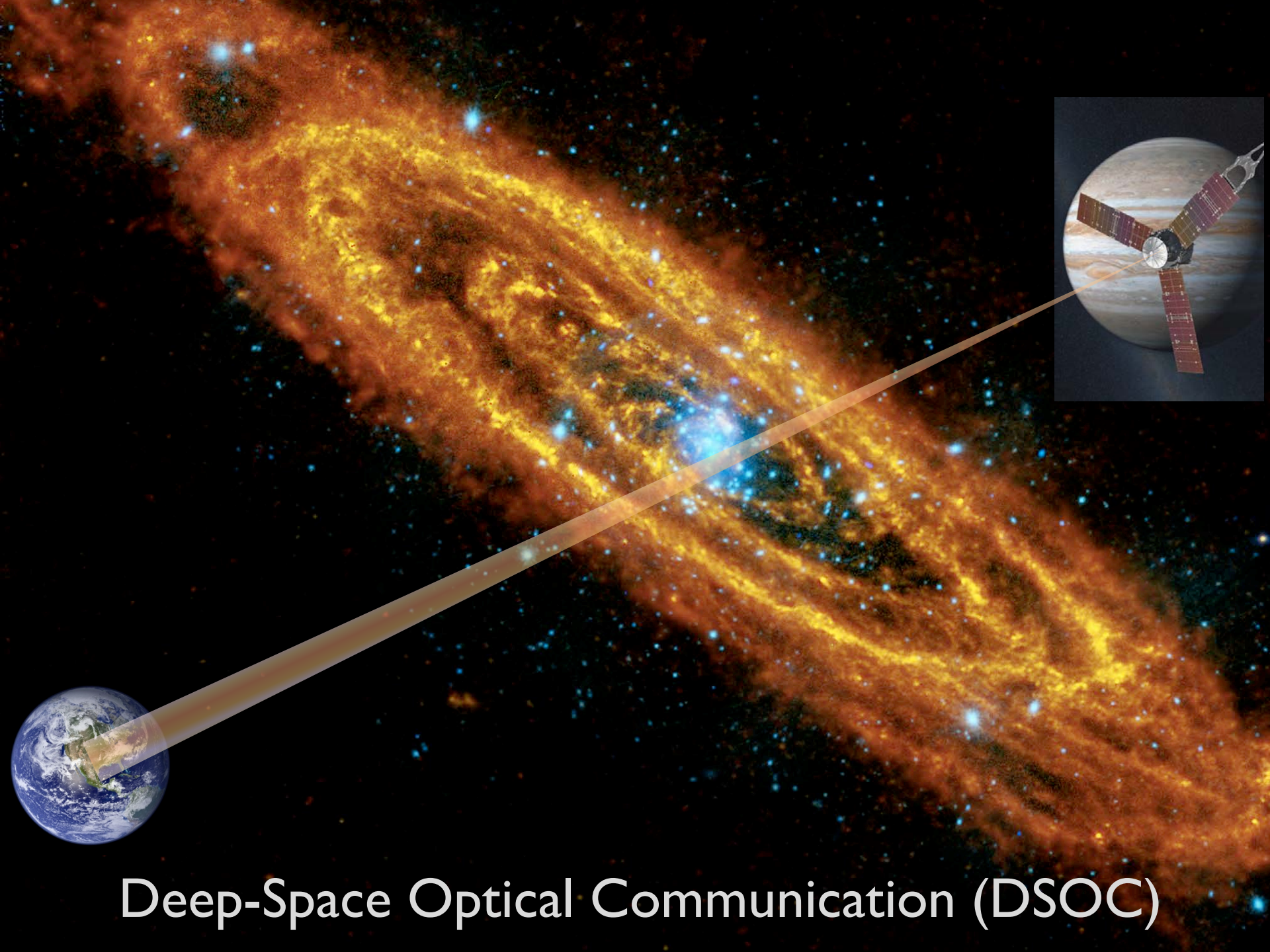
Deep-Space Optical Communication (DSOC)

Deep Space Network (DSN)

Camberra

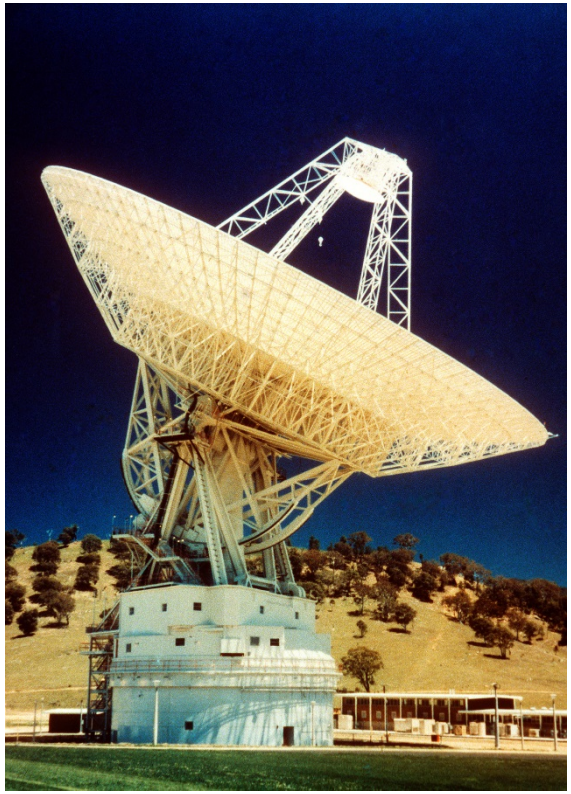

Goldstone

Madrid

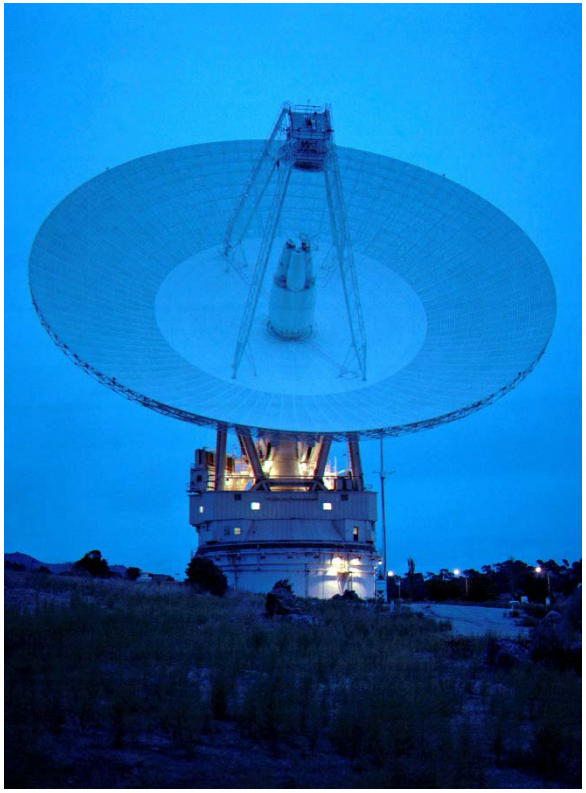

http://deepspace.jpl.nasa.gov/dsnnow/

Deep Space Network (DSN)

Jet Propulsion Laboratory
California Institute of Technology

Camberra

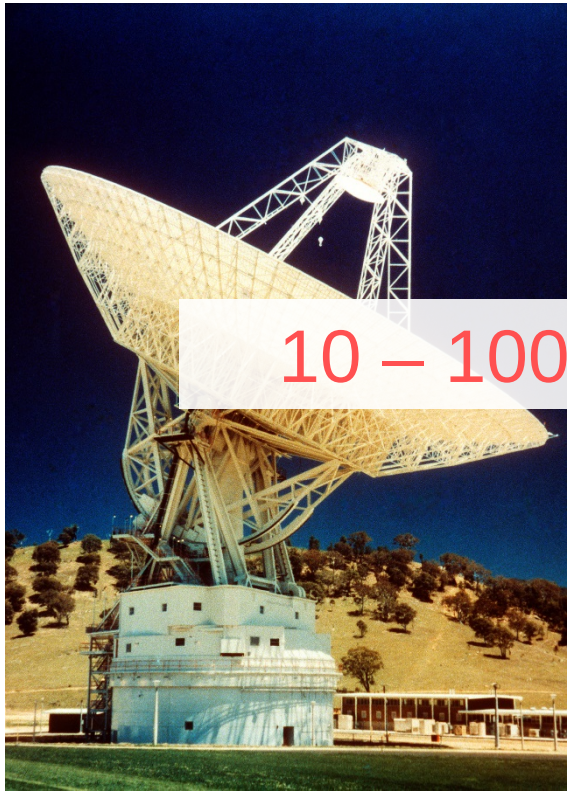

Goldstone

Madrid

10 – 100 × higher data rate with DSOC

http://deepspace.jpl.nasa.gov/dsnnow/

Deep Space Optical Communication

- Human exploration
- Data-intensive missions to deep space
- Advanced in-situ instruments

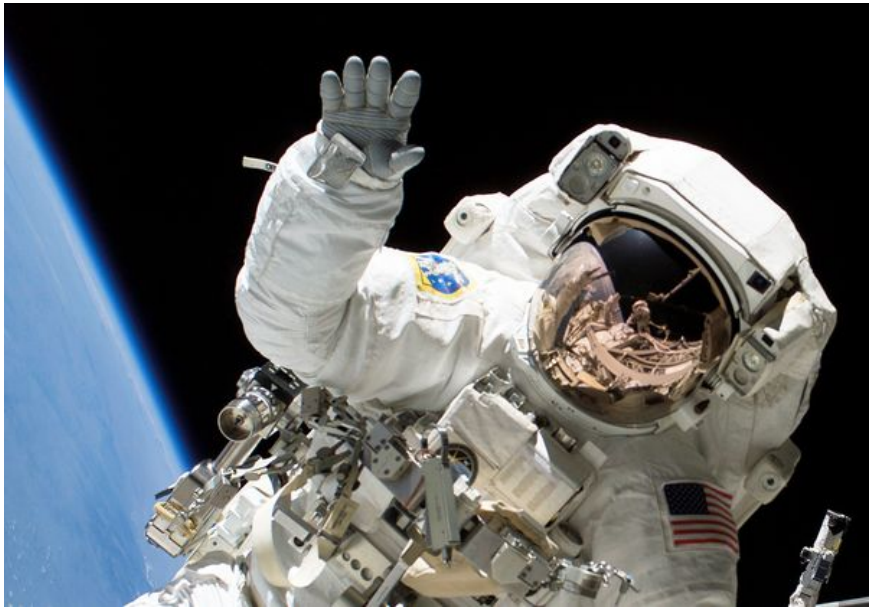

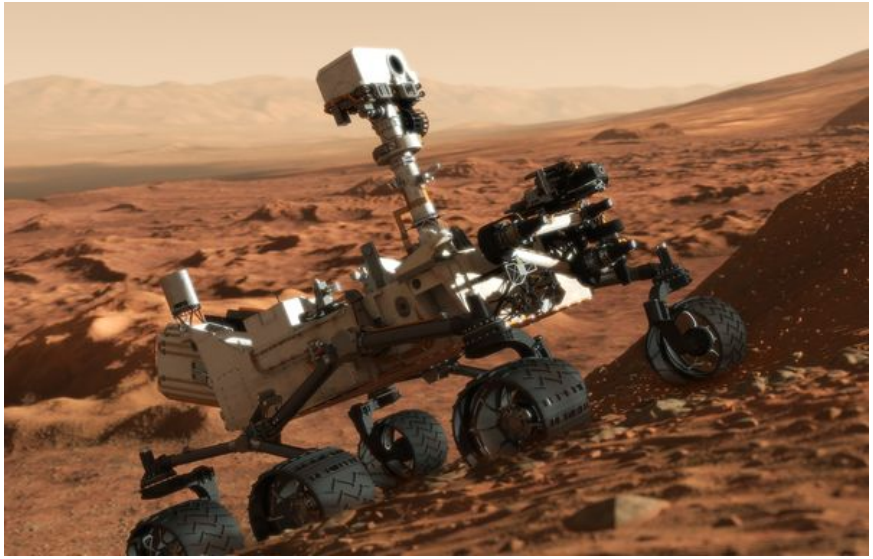

DSOC Technologies

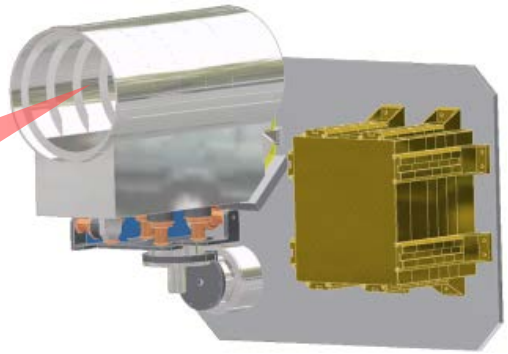

Laser Downlink (1 Gb/s)

Deep-Space Transceiver:

- Efficient Laser (1550 nm)
- Vibration Isolation
- Photon-counting detector

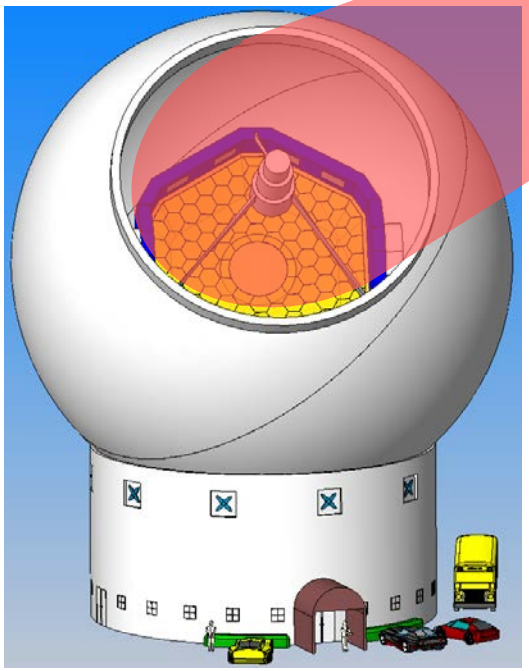

Ground Optical Receiver:

- > 10 m-diameter telescope
- Photon-counting detector

DSOC Technologies

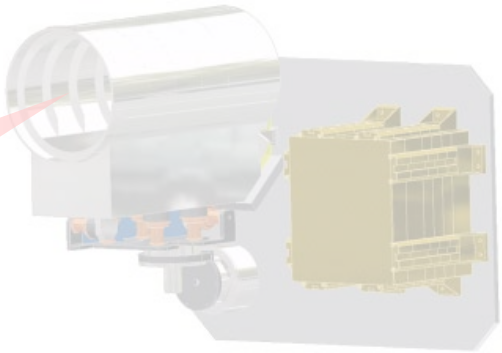

Laser Downlink

Deep-Space Transceiver:

- Efficient Laser (1550 nm)
- Vibration Isolation
- Photon-counting detector

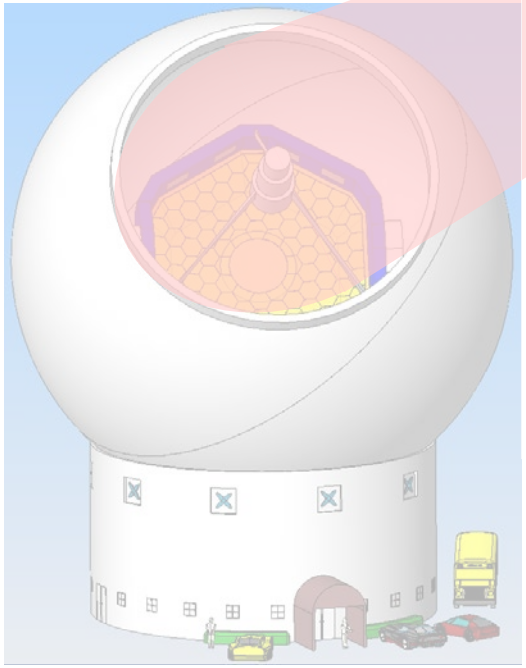

Best possible detectors

Ground Optical Receiver:

- > 10 m-diameter telescope
- Photon-counting detector

Tungsten Silicide Superconducting Nanowire Single Photon Detectors (WSi SNSPDs)

Detection Mechanism

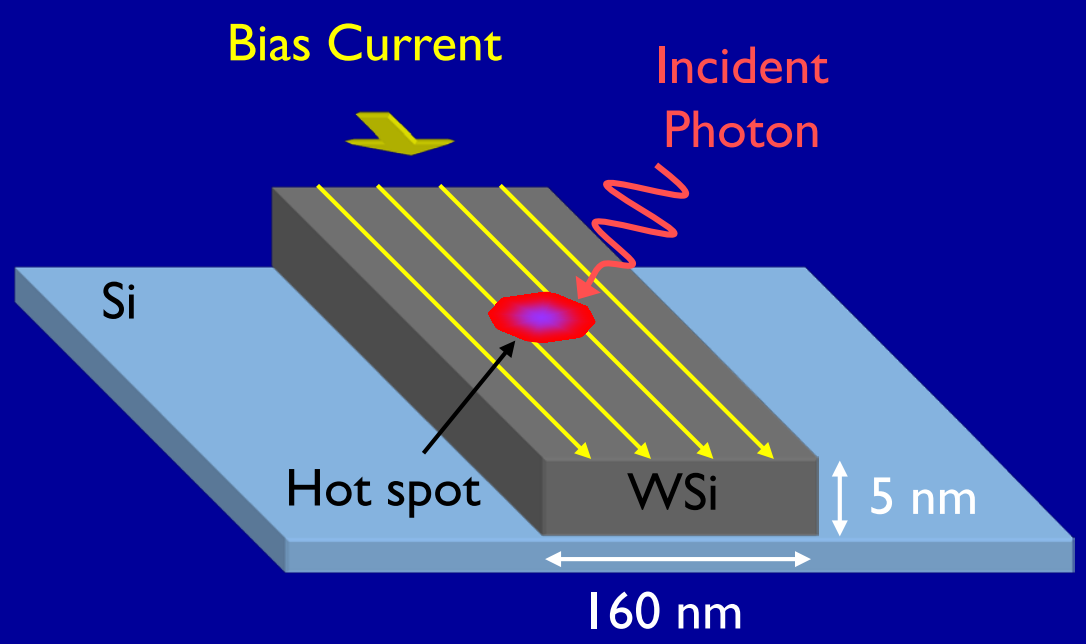

Photon creates a hot spot

Gol'tsman *et al.*, APL 79, 705 (2001)

Detection Mechanism

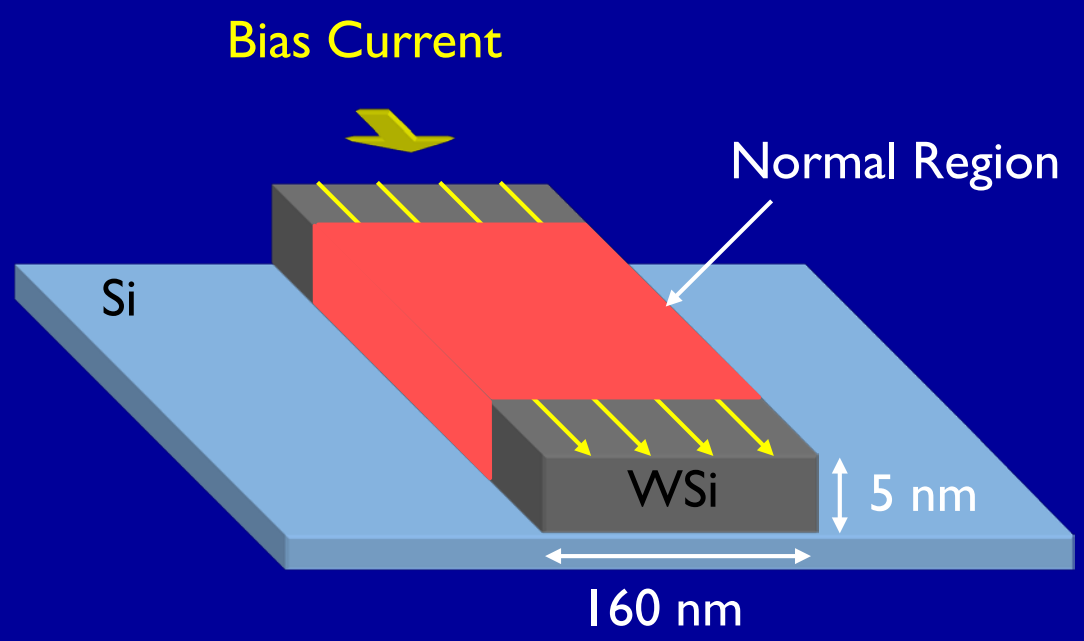

Nanowire cross-section becomes normal

Gol'tsman *et al.*, APL 79, 705 (2001)

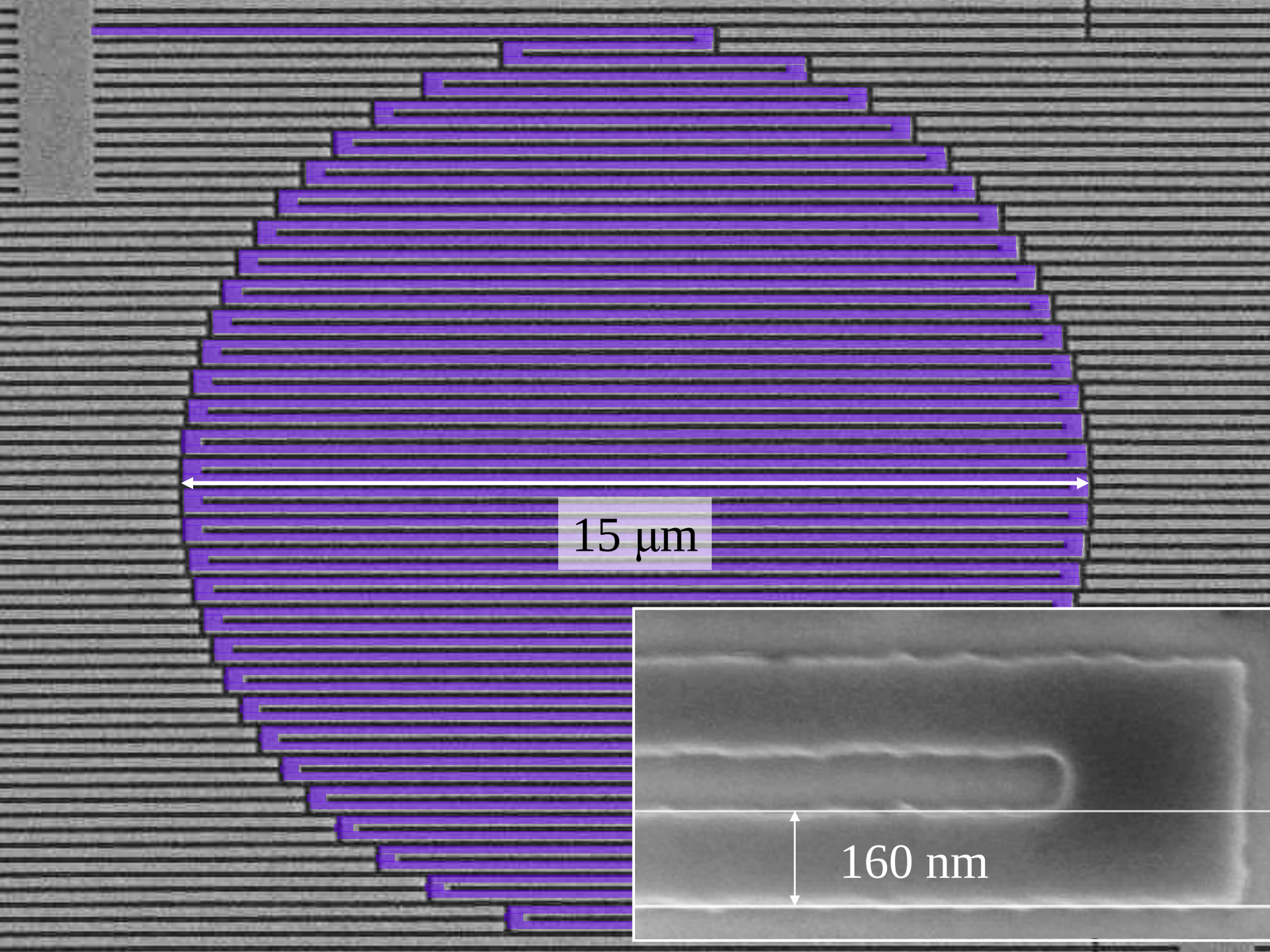
15 μm
160 nm

93% System Detection Efficiency

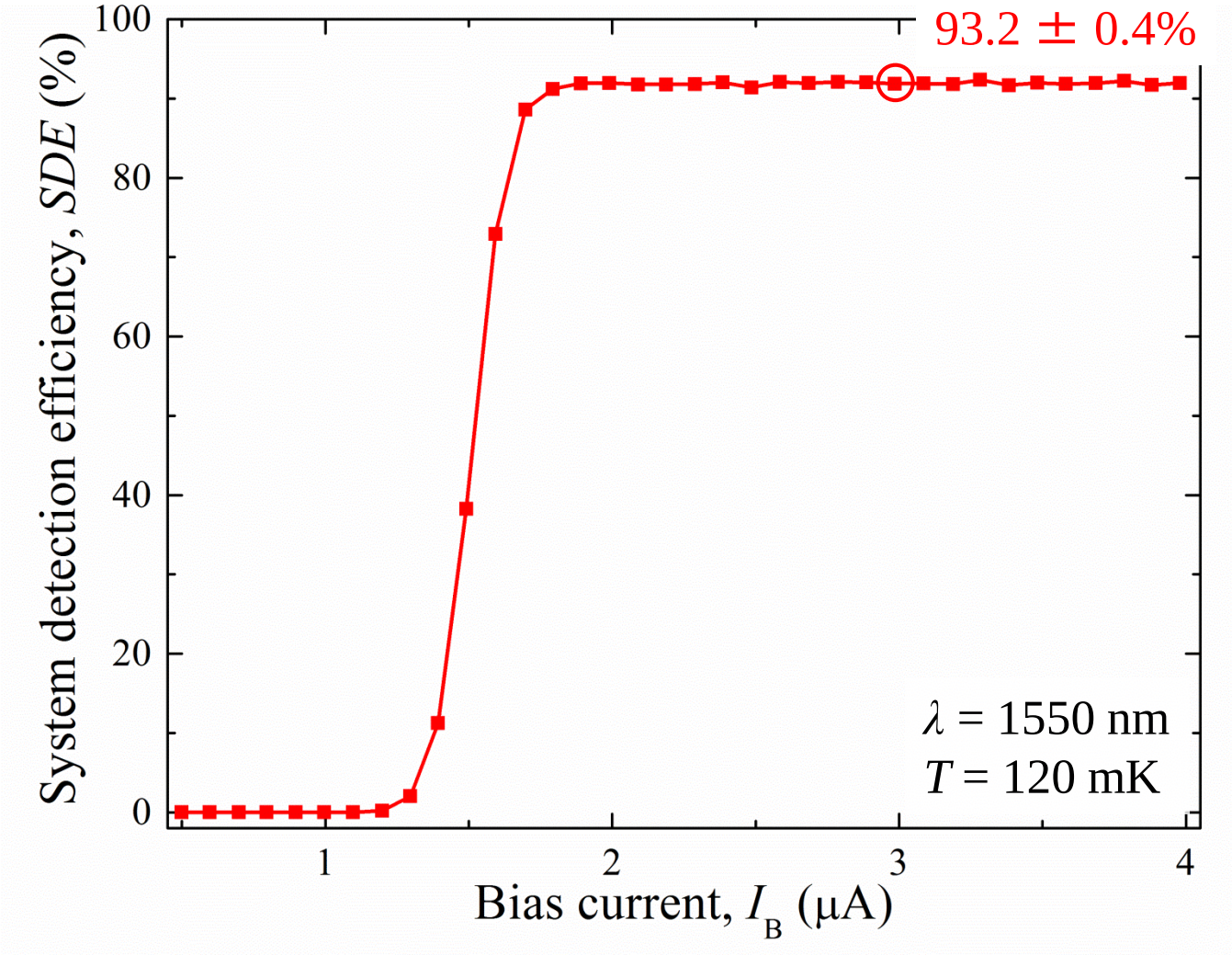

Marsili et al., Nature Photonics 7, 210 (2013)

Background and Dark Count Rate

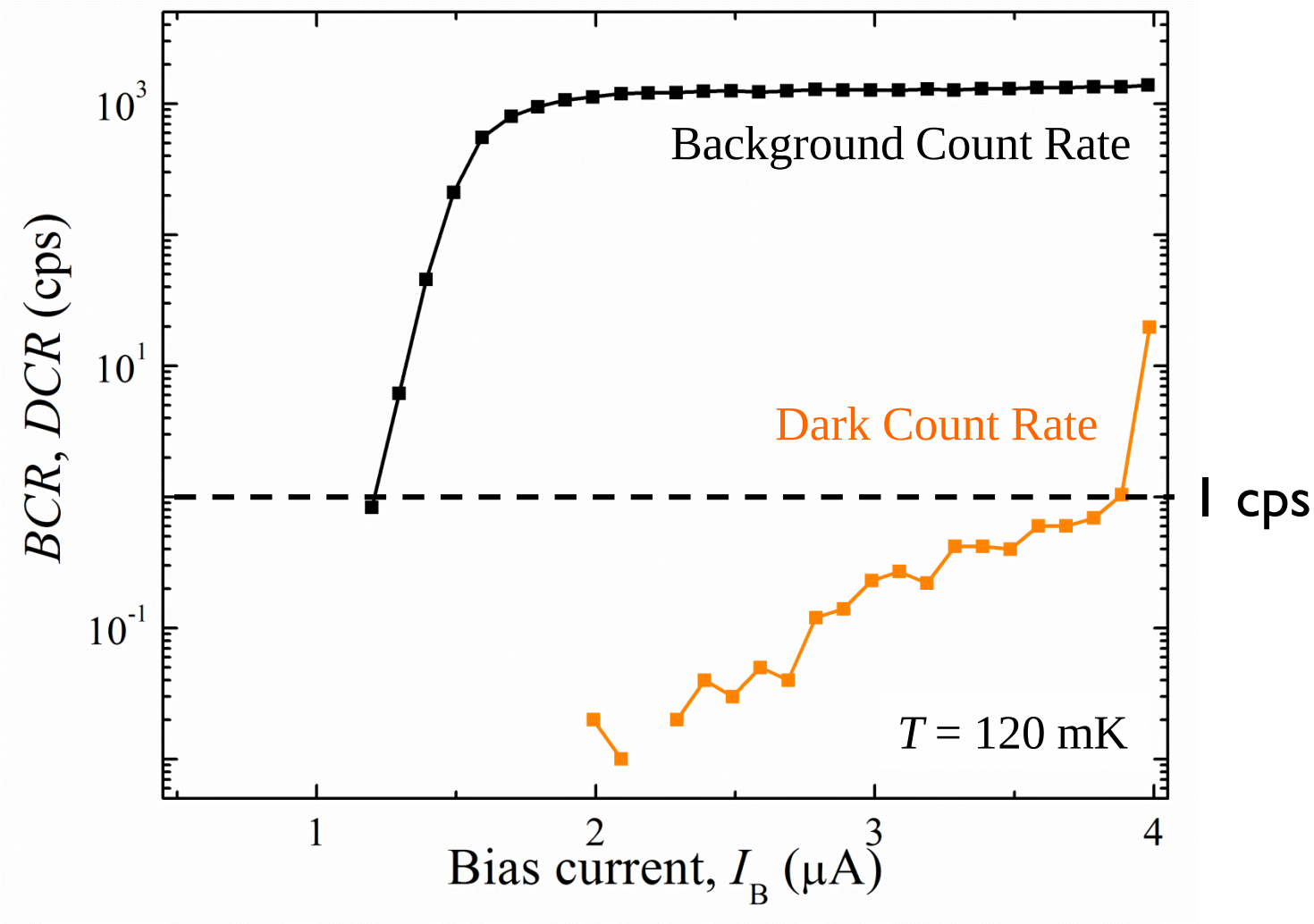

Marsili et al., Nature Photonics 7, 210 (2013)

Jitter

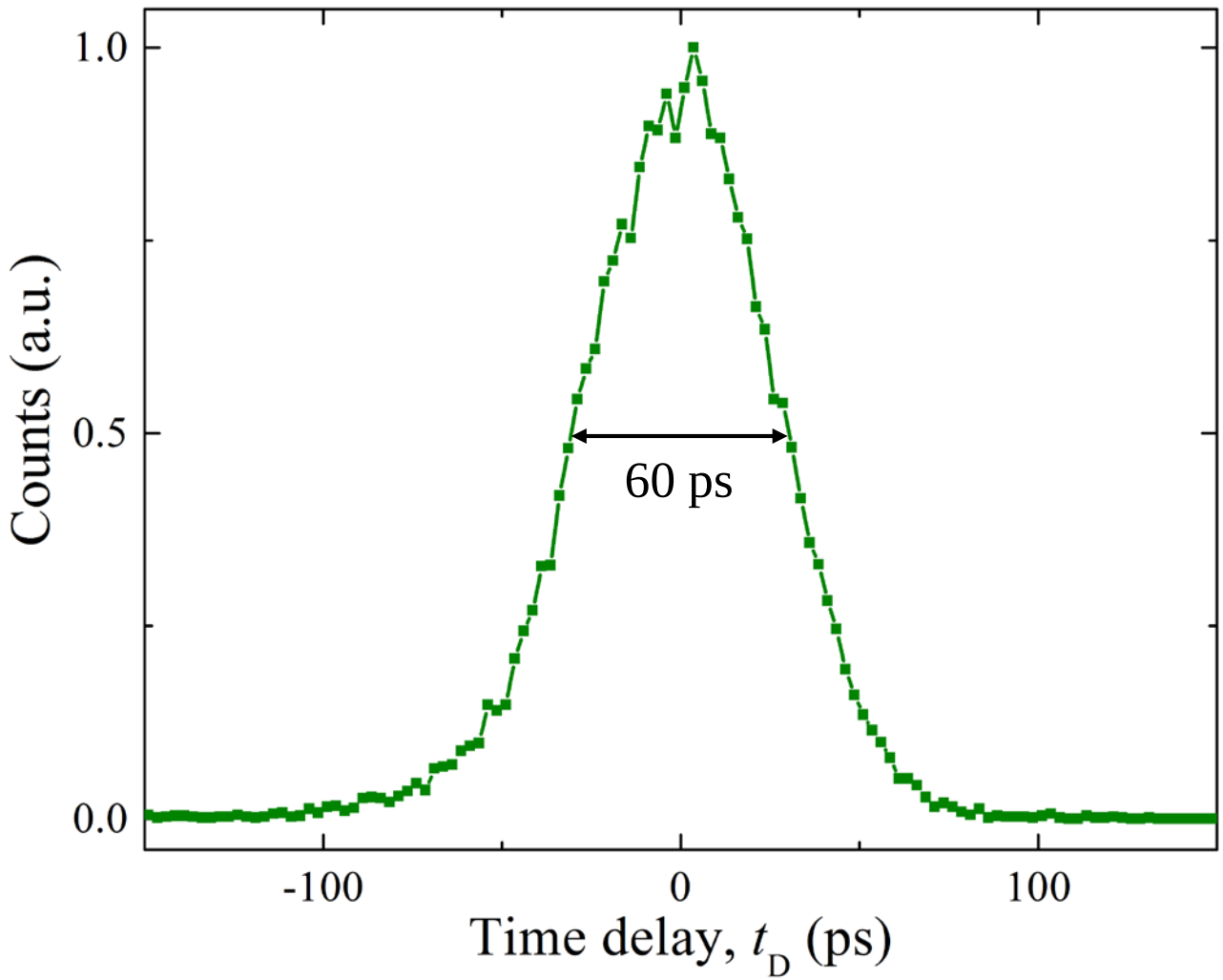

Dauler et al., Opt. Eng. 53, 081907 (2014)

Reset Time

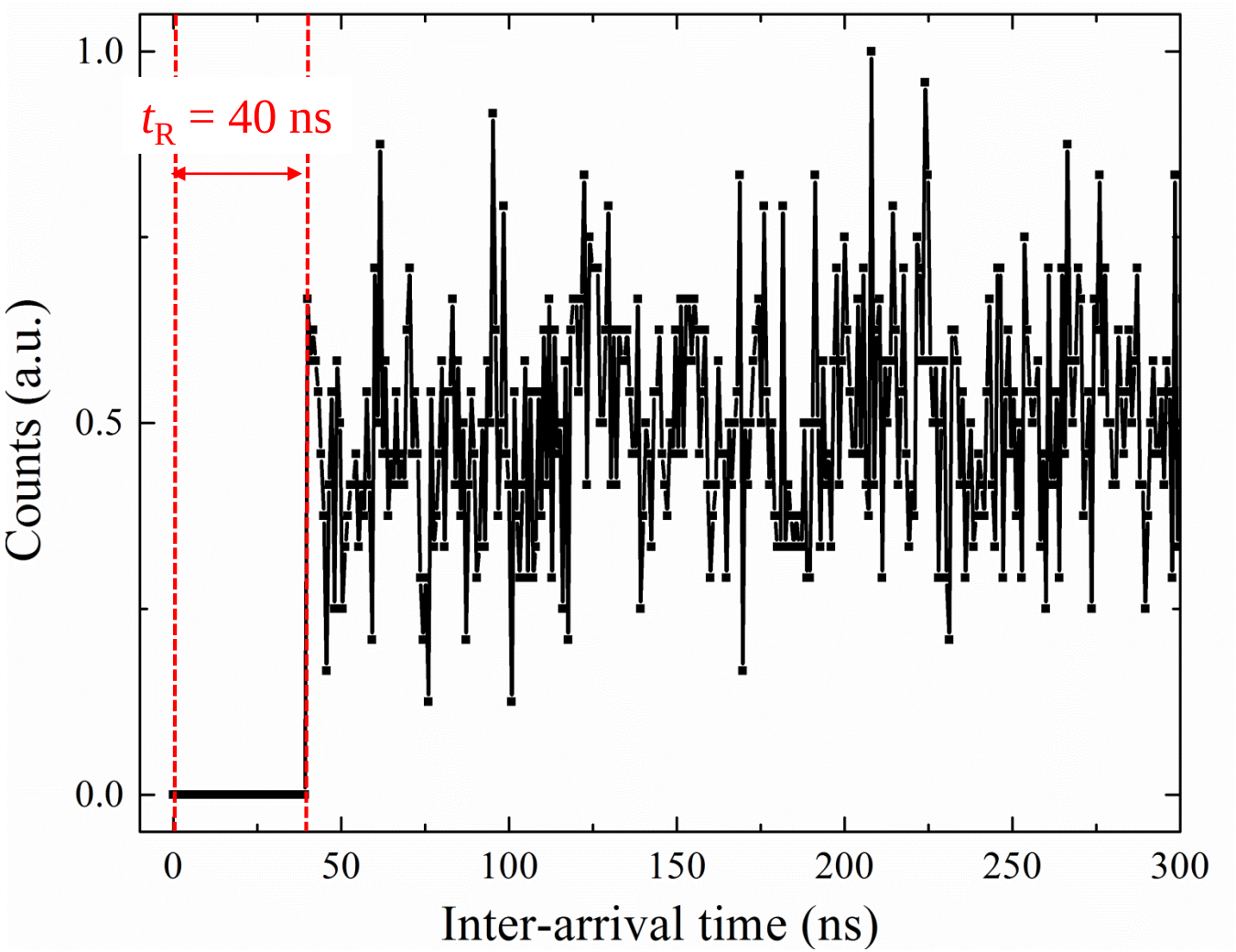

Marsili FiO 2015

Marsili et al., Nature Photonics 7, 210 (2013)

Efficient Fiber Coupling

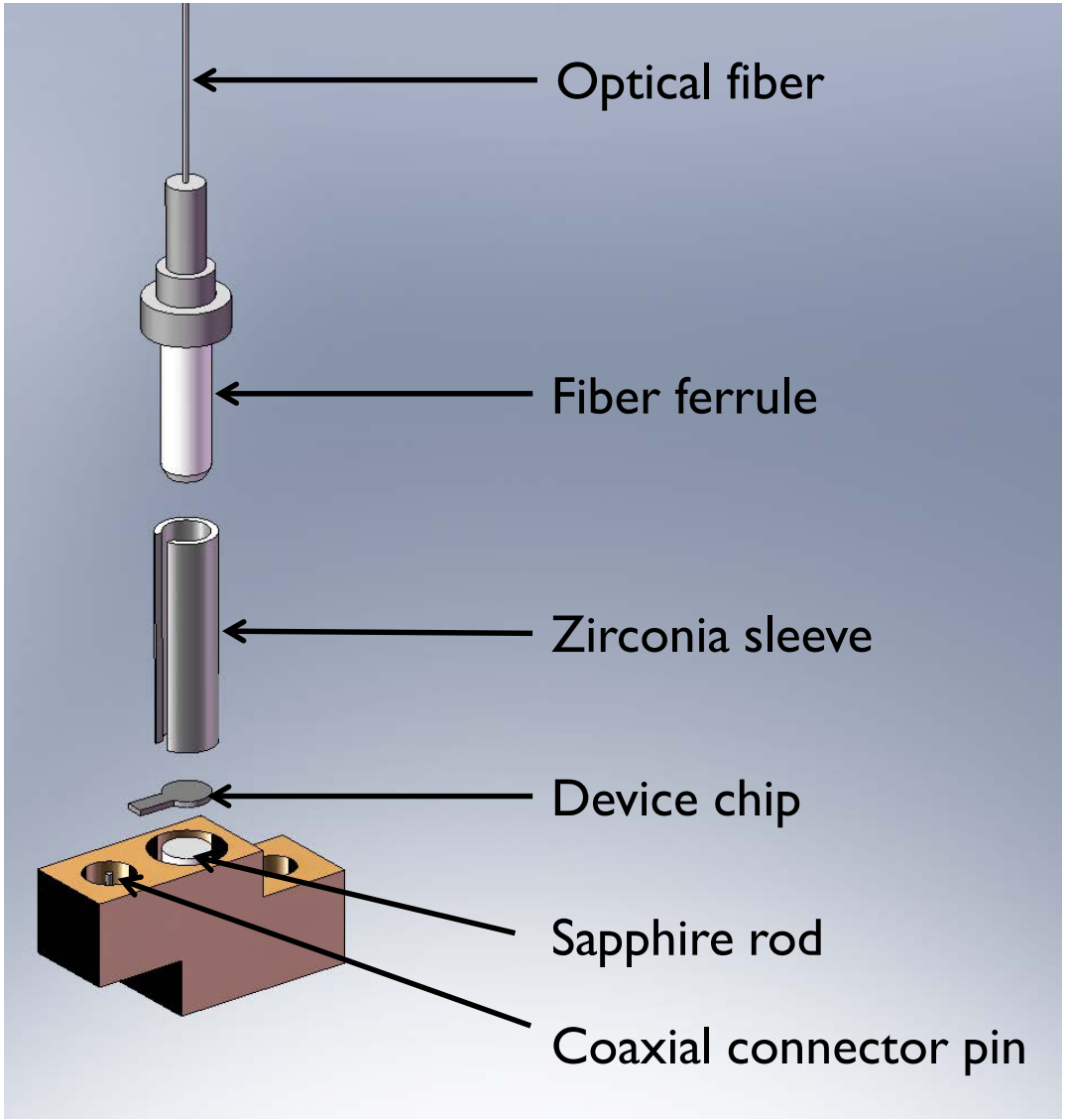

Miller et al., Opt. Express 19 (10), 9102 (2011)

DSOC Detector Requirements

	SNSPDs	DSOC requirements
SDE	93 % at 1550 nm	> 50 % at 1550 nm
Jitter	60 ps FWHM	< 300 ps FWHM
Reset time	40 ns	< 1 ns
Active Area	4×10^{-4} mm^2	0.1 mm^2
Coupling	SM fiber	Free Space

DSOC Detector Requirements

	SNSPDs	DSOC requirements
SDE	93 % at 1550 nm	> 50 % at 1550 nm
Jitter	60 ps FWHM	< 300 ps FWHM
Reset time	40 ns	< 1 ns
Active Area	4×10^{-4} mm^2	0.1 mm^2
Coupling	SM fiber	Free Space

12-Pixel Arrays of WSi SNSPDs

12-Pixel SNSPD Arrays

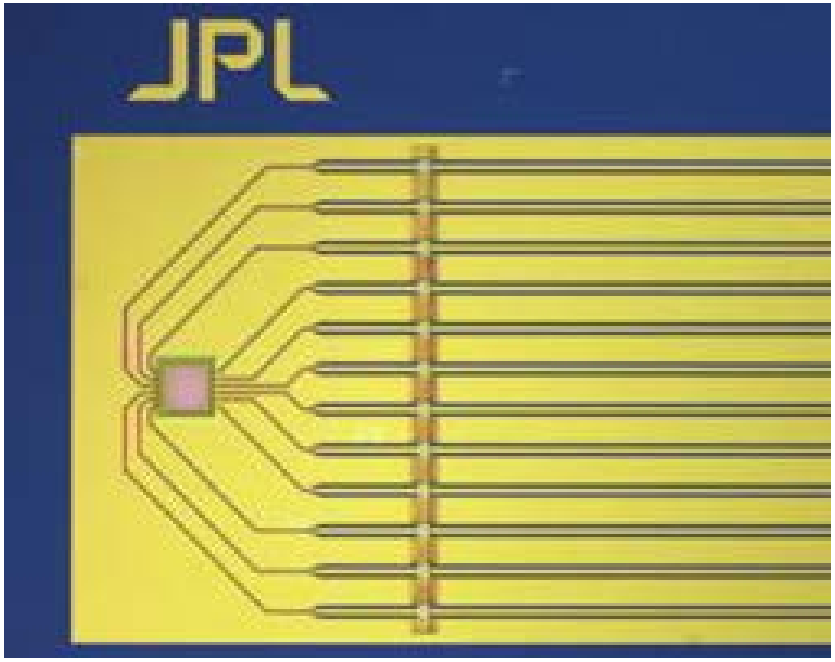

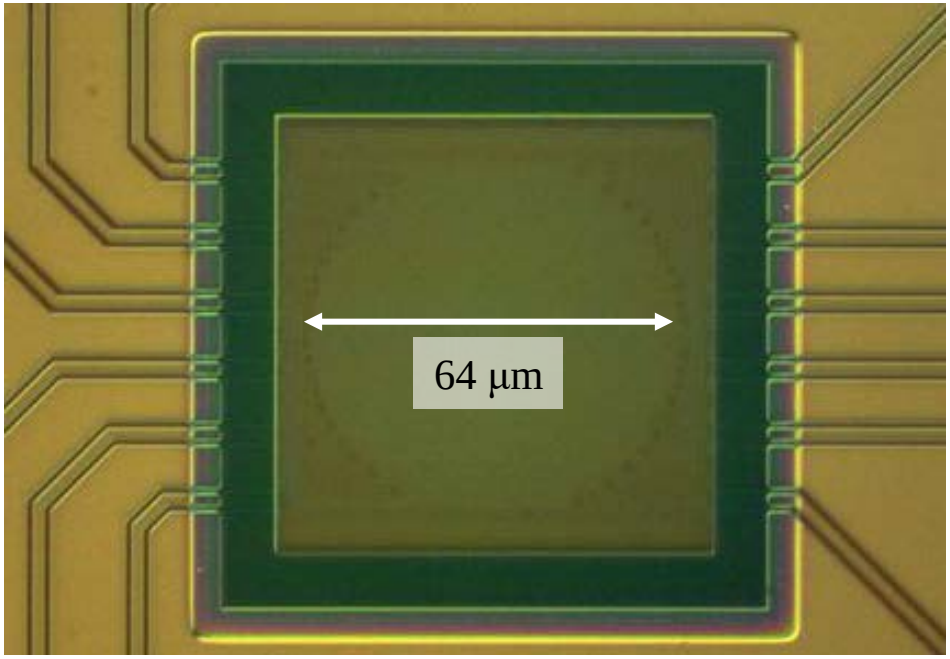

- 12 Counter-wound Nanowires, 6 wires in each plane, 160 nm width
- 64 µm diameter active area matched to multimode fibers
- Quarter wave optical cavity to resonantly enhance absorption at 1.55 µm

Lunar Laser Communication Demonstration (LLCD)

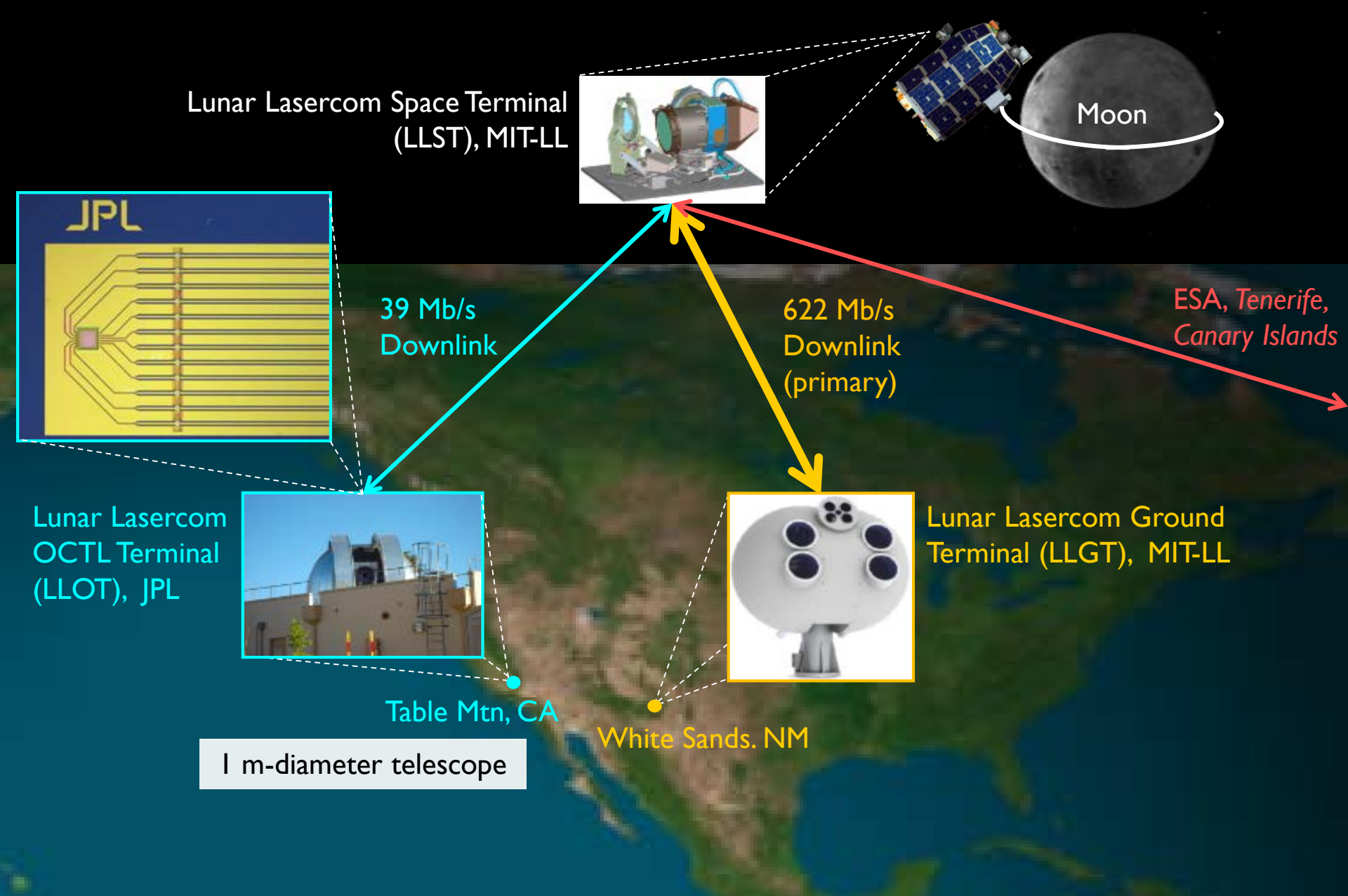

Lunar Laser Communication Demonstration (LLCD)

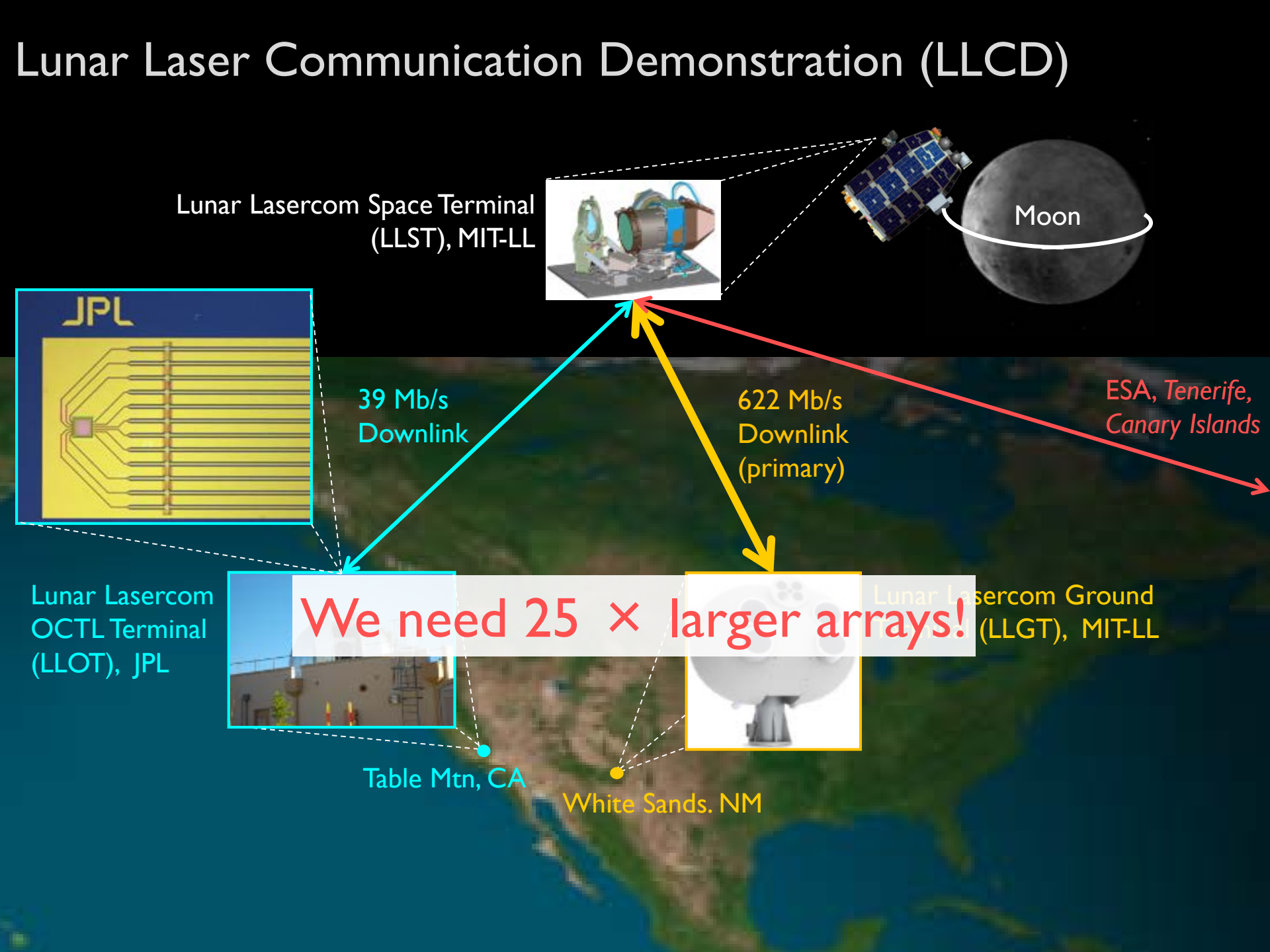

64-Pixel Arrays of WSi SNSPDs

64-Pixel SNSPD Arrays

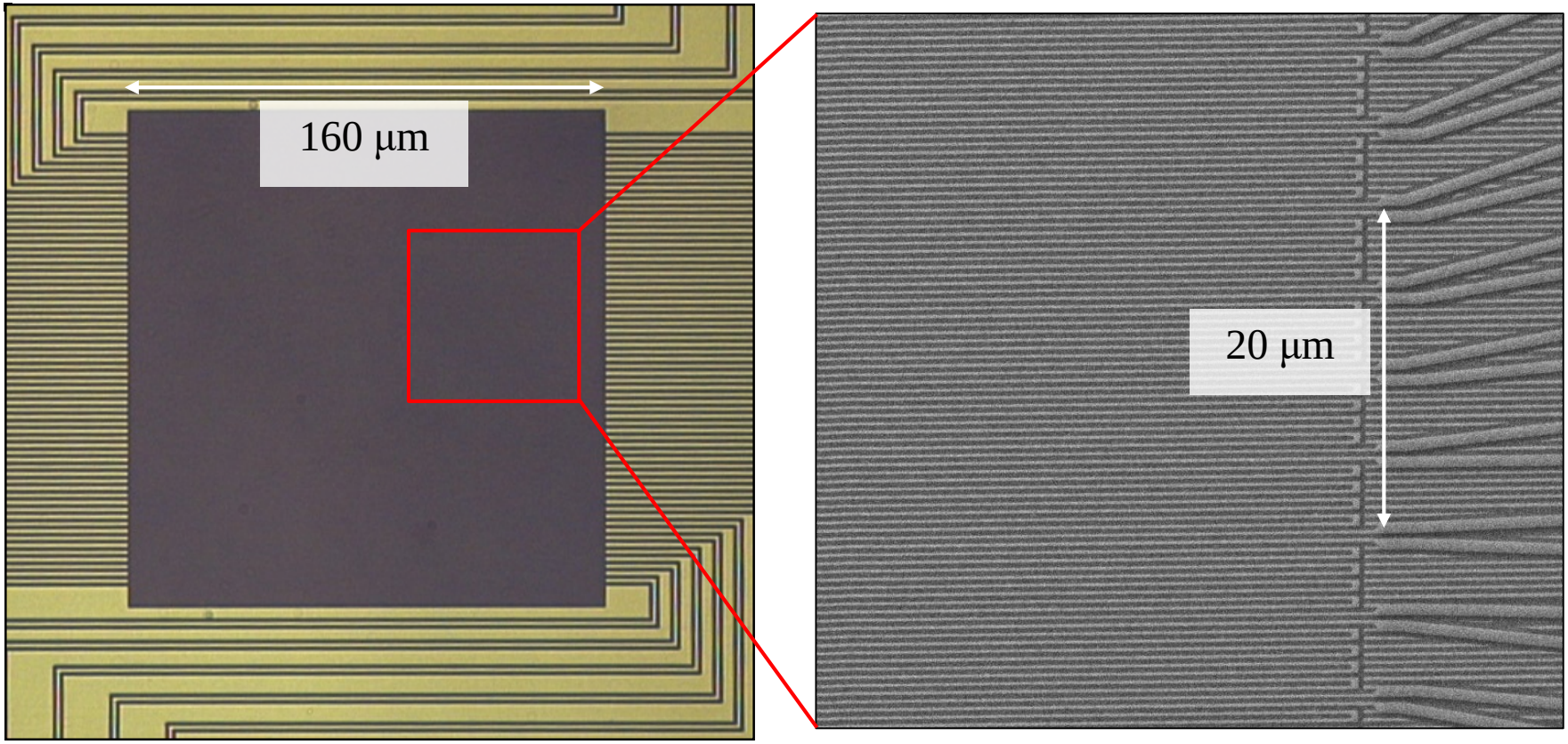

Free-Space Coupling

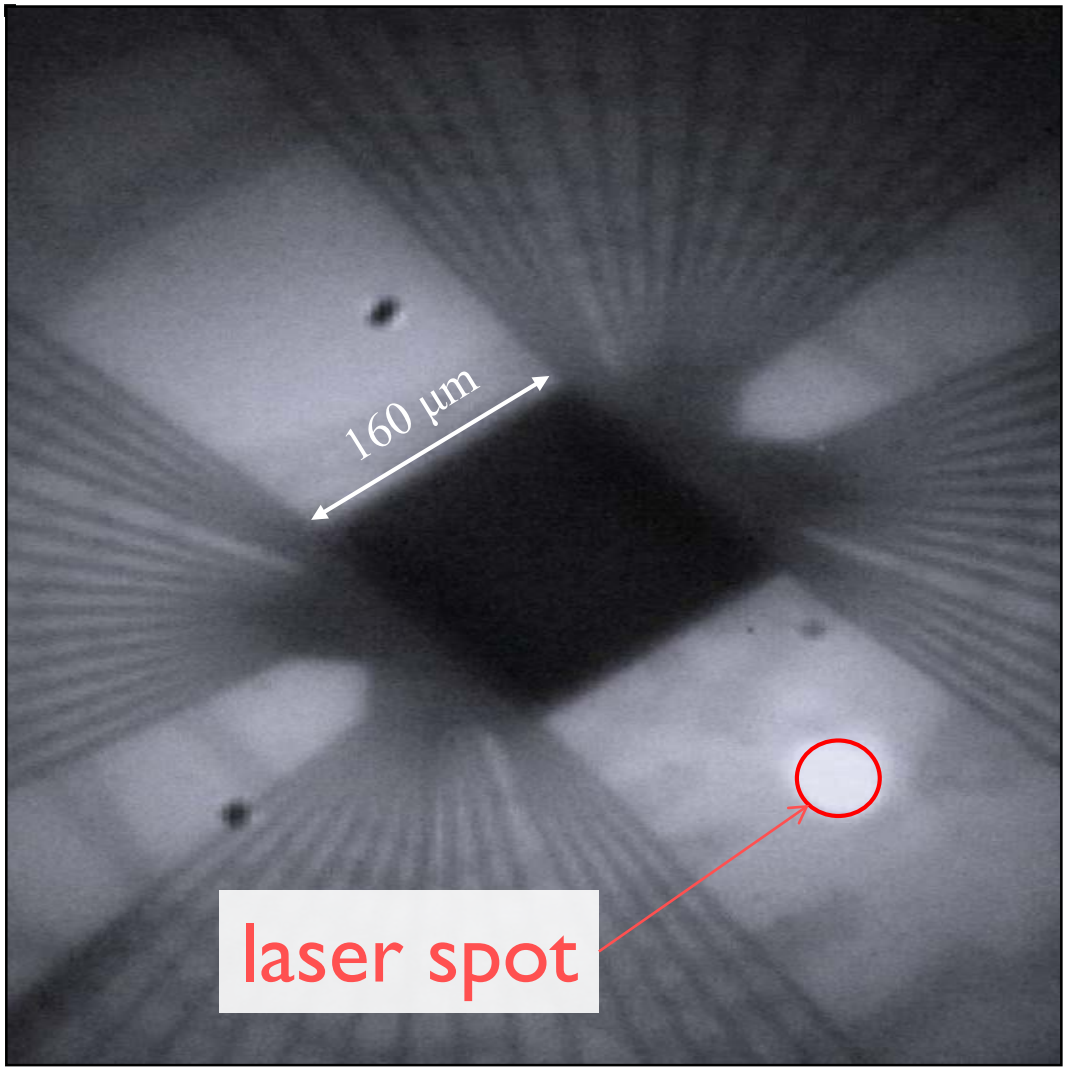

Array Read Out

Read Out Concept

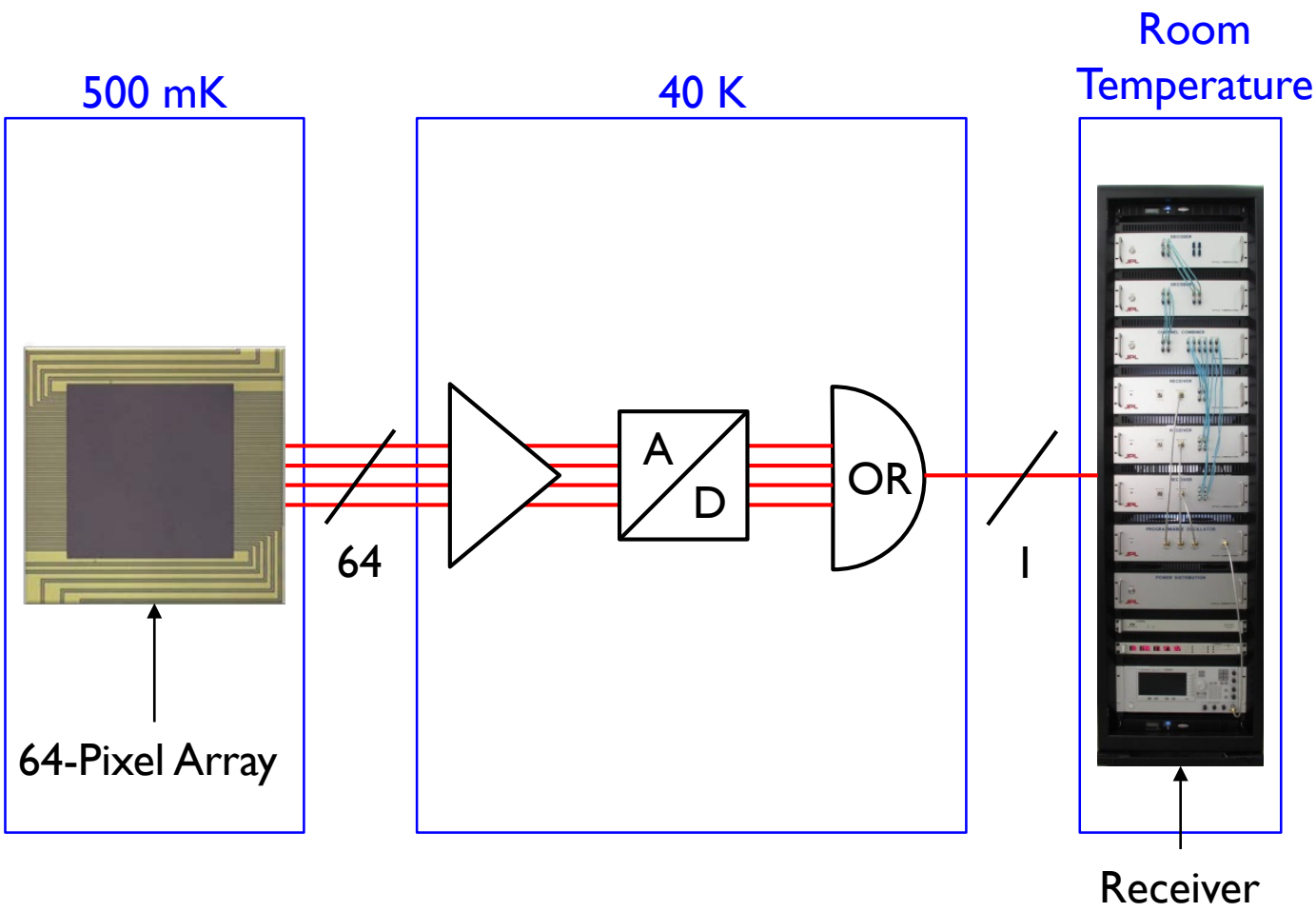

Cryogenic Channel Combiner

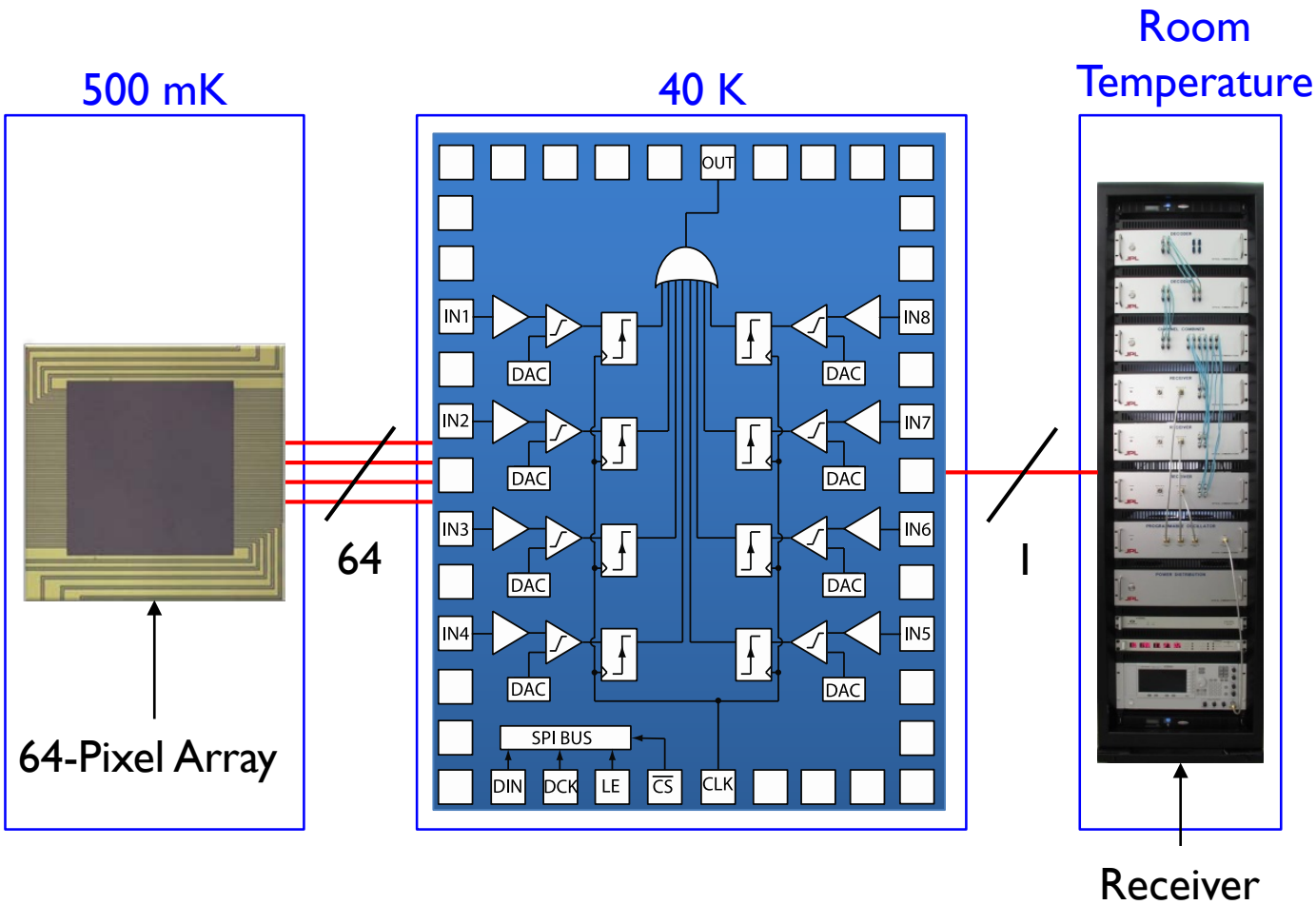

University of Massachusetts
Amherst

Cryogenic Channel Combiner

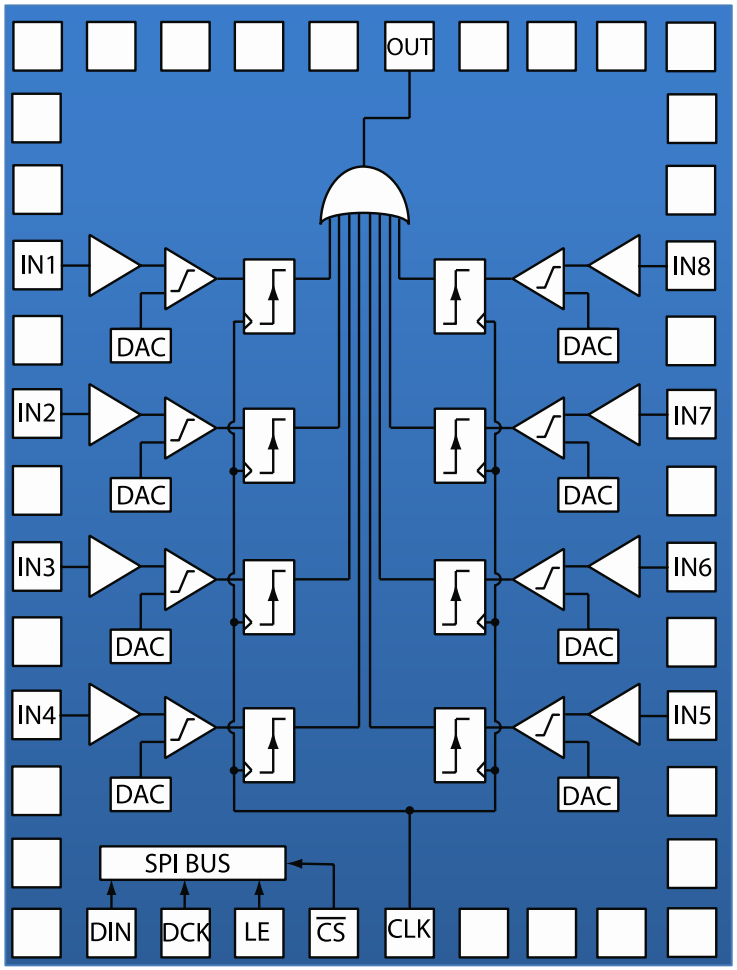

- SiGe electronics
- Amplification, A / D conversion, 8-port OR
- 40 K operation
- 6.4 GHz clock

Results

Pixel *SDE* vs *BCR*

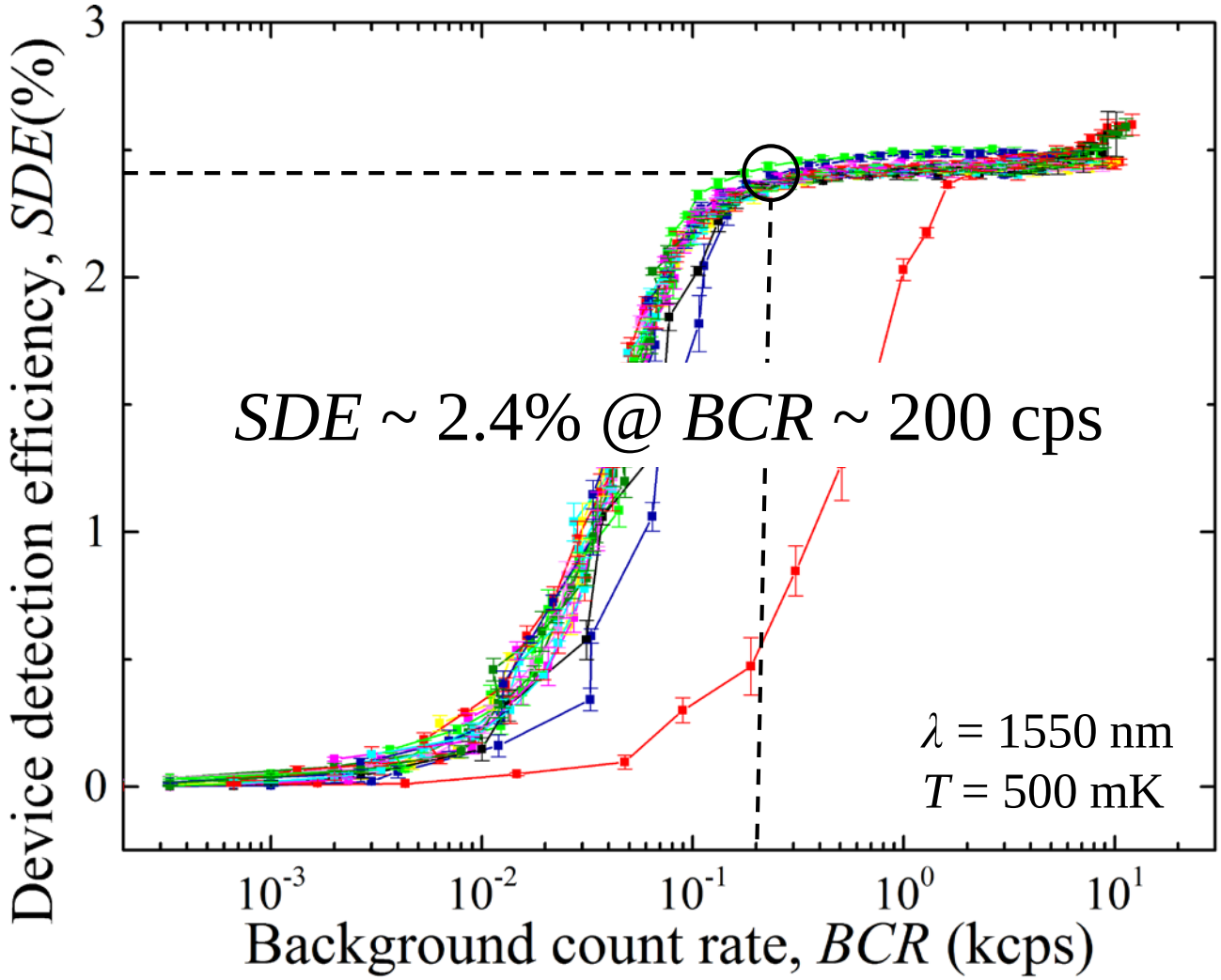

Combined *SDE*

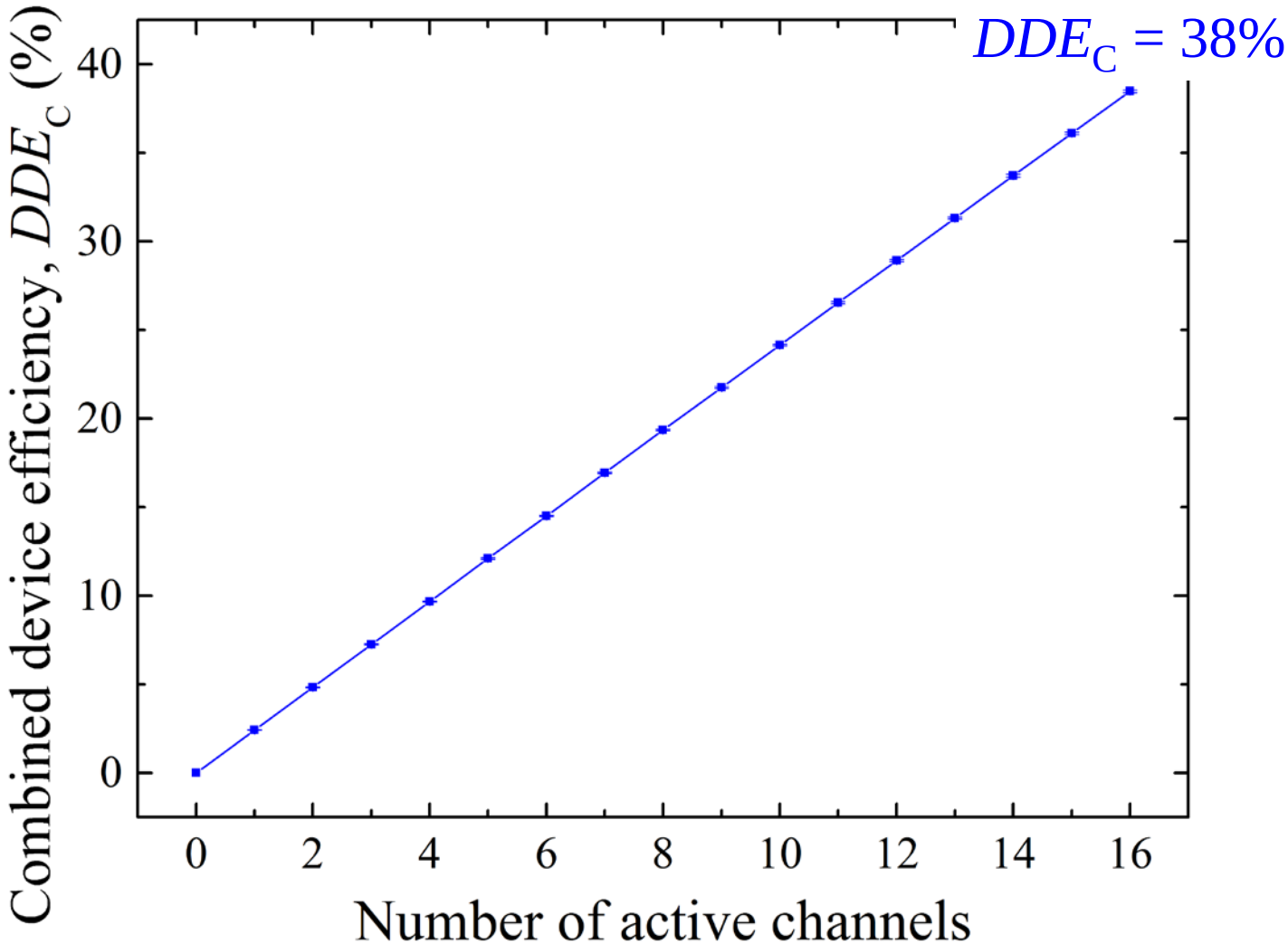

Maximum Count Rate (*MCR*)

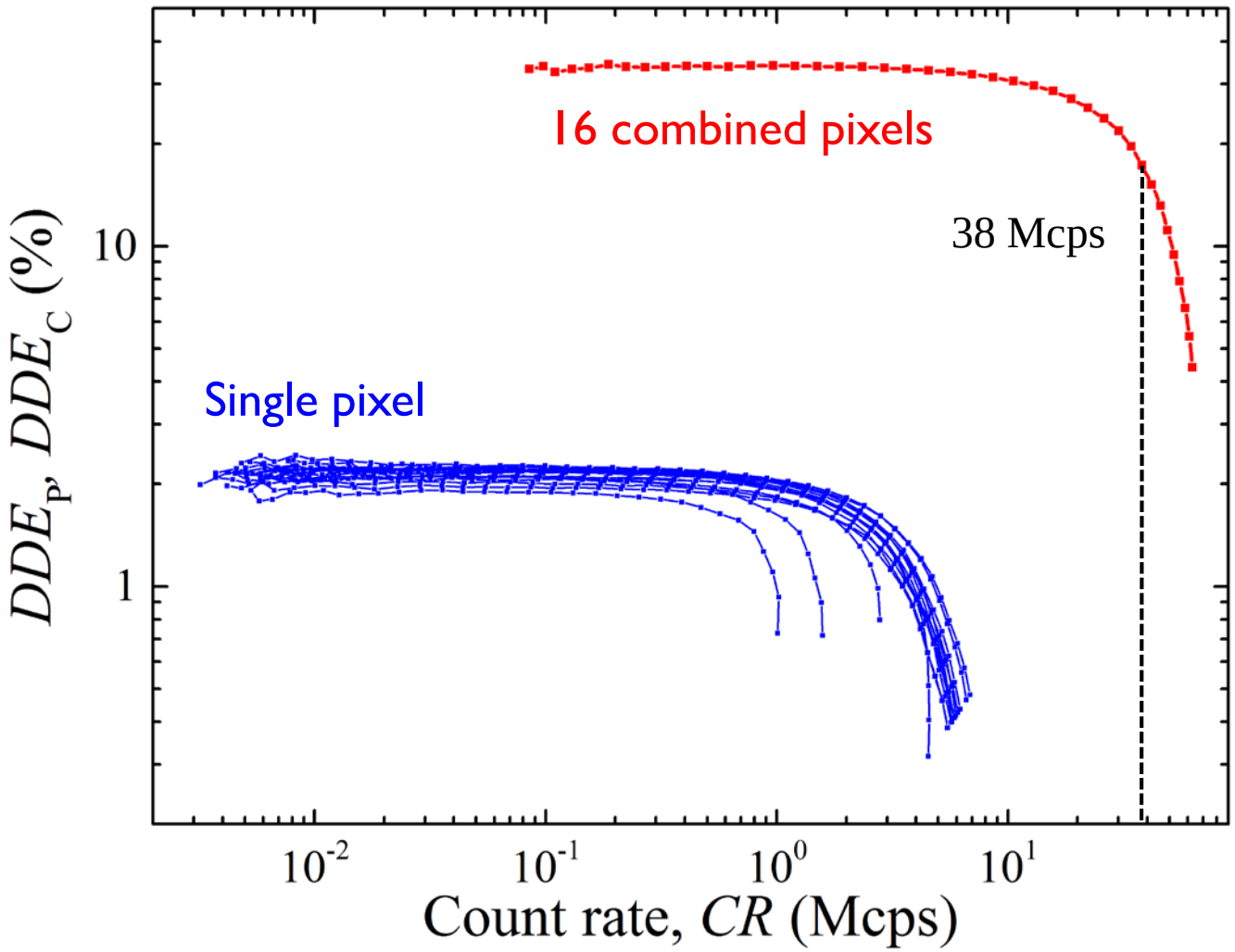

Jitter vs Bias Current

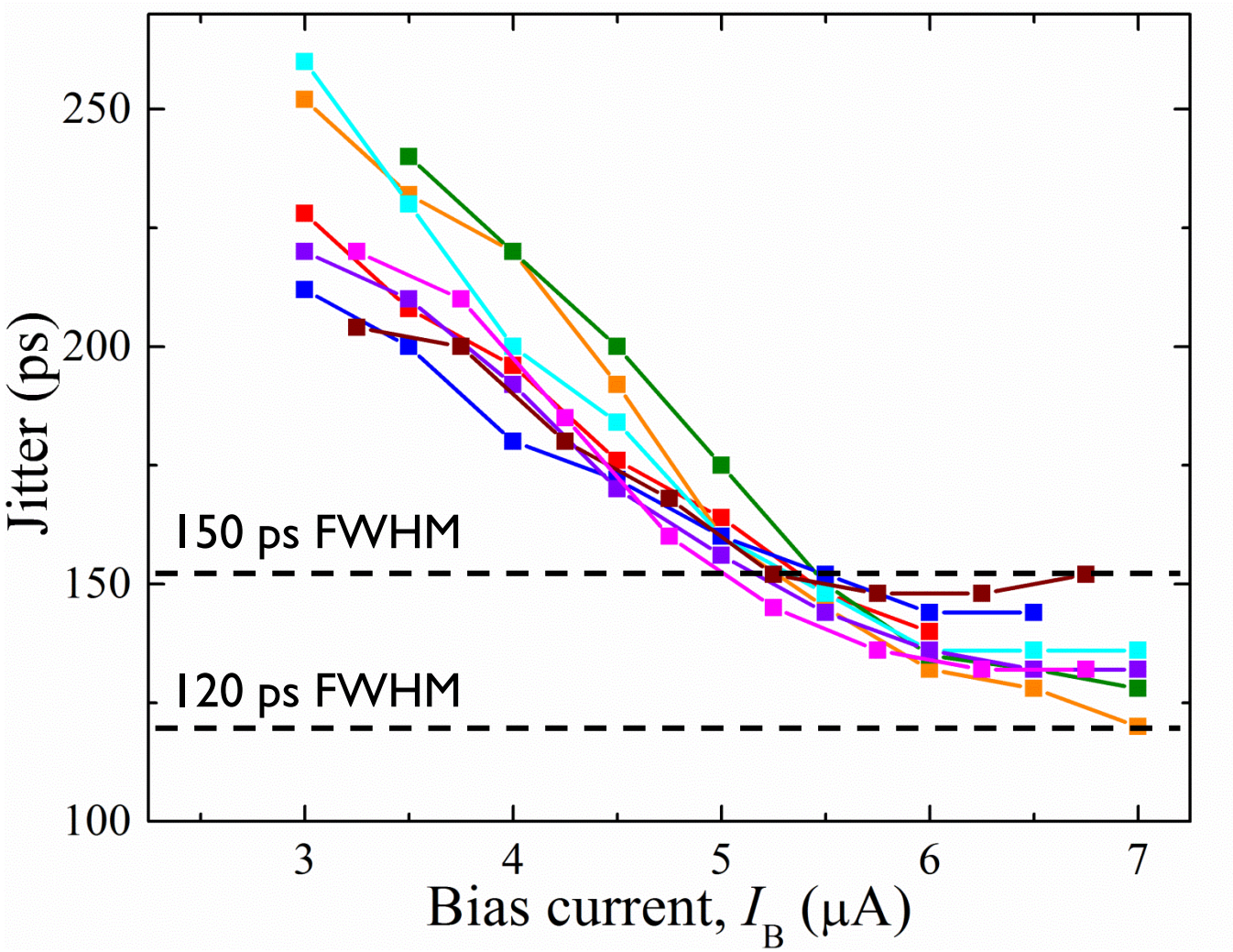

University of Massachusetts
Amherst

Jitter with Combiner

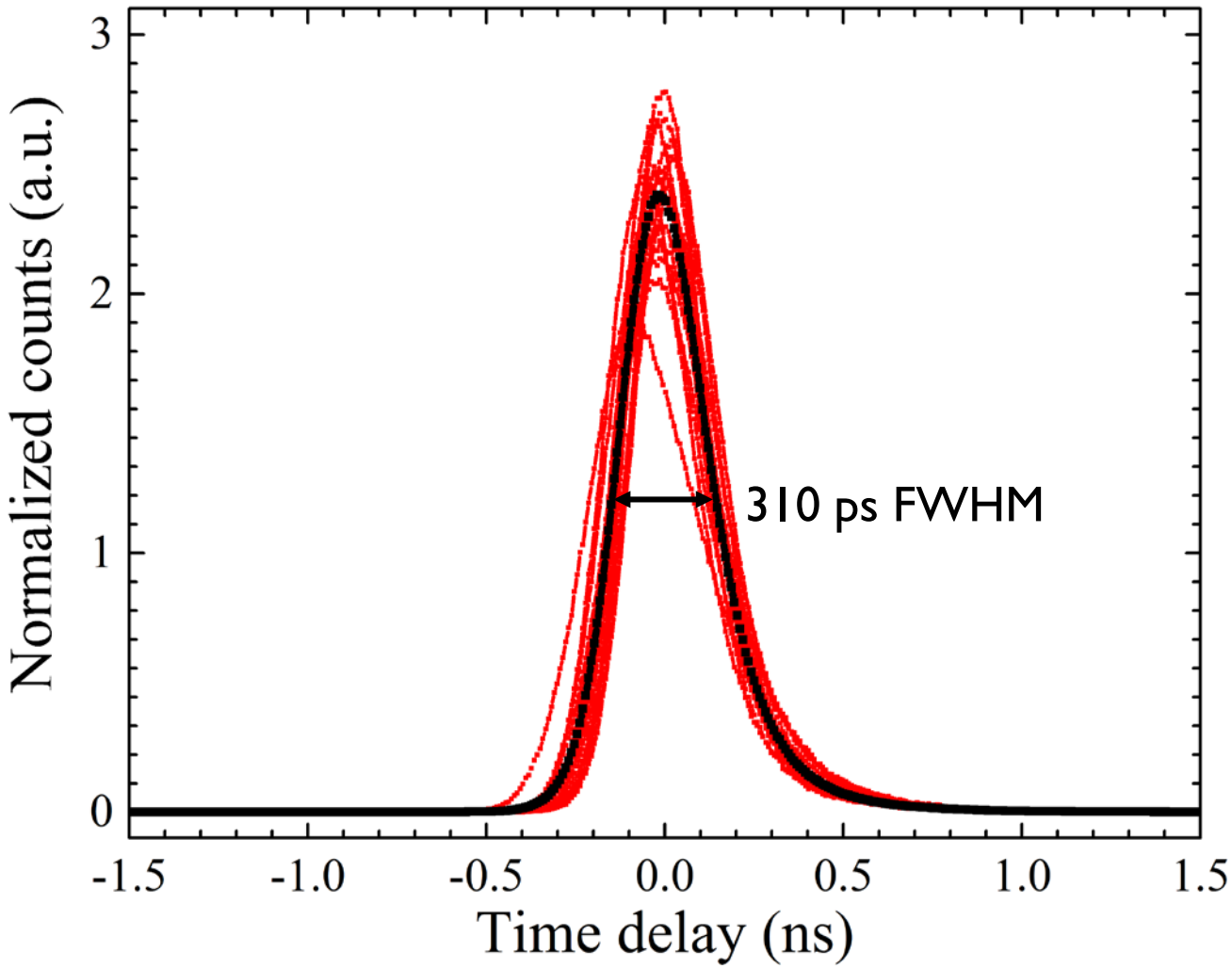

64-pixel array expected performance

- Array system detection efficiency *SDE* ~ 50%
- Efficient coupling to a 5 m-diameter telescope
- Array maximum count rate *MCR* ~ 200 MHz

64-pixel array expected performance

- Array system detection efficiency *SDE* ~ 50%
- Efficient coupling to a 5 m-diameter telescope
- Array maximum count rate *MCR* ~ 200 MHz

We need 4 × larger arrays!

Larger Arrays in Development

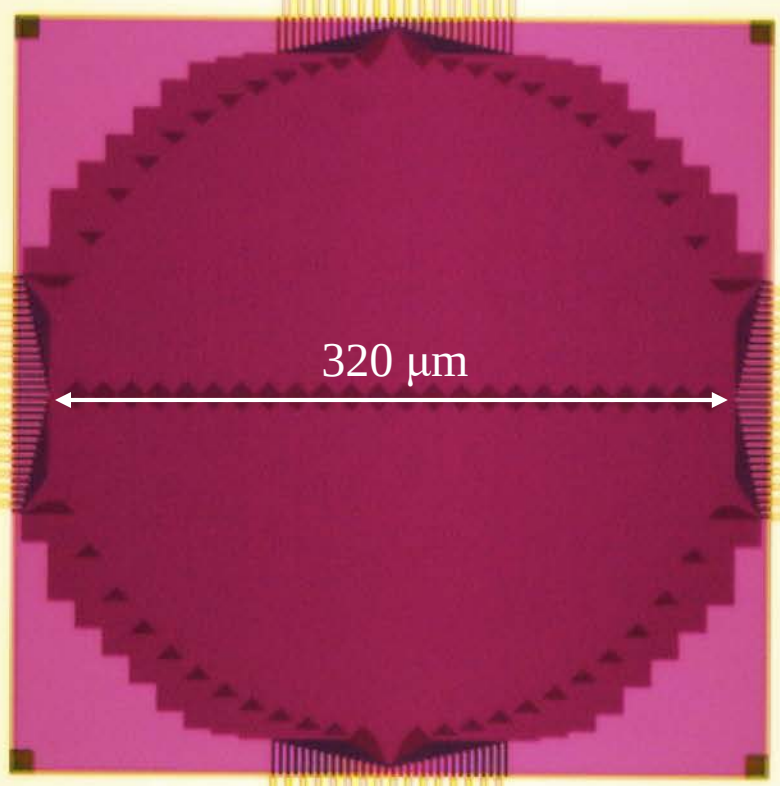

fmarsili@jpl.nasa.gov

End of Presentation

Real-time Video Link Closed
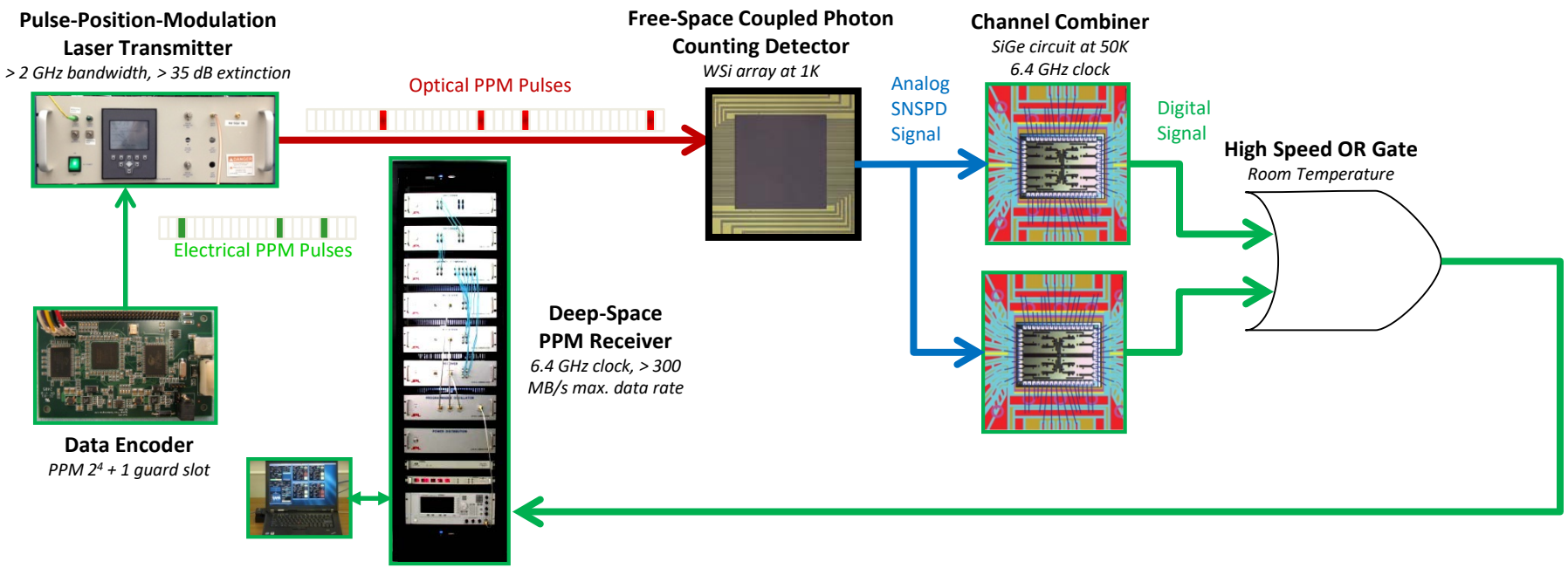
- **Closed a real-time video communication link using DSOC 64-pixel WSi SNSPD array and two SiGe cryogenic channel combiner ROICs at 40K**
  - 47 Mb/s with live high-definition TV signal, error rate 10^{-5}, 6.4 GHz receiver clock, 2.5 ns transmit slot width, 1064 nm transmit laser
  - 160 x 160 μm^2 area 64-pixel DSOC array (14 channels read out in one quadrant)
  - 38 MHz total count rate, < 1 kHz dark count rate, illuminated 80 x 80 μm^2 subarray.
  - Used two 8-channel combiners inside the cryostat, "daisy chaining" the programming and bias lines between them. This is an important technical milestone proving the concept before scaling to 9 combiners in the full 64-pixel demo.