National Aeronautics and
Space Administration

Jet Propulsion Laboratory
California Institute of Technology
Pasadena, California

Surface Water and Ocean Topography (SWOT) Mission

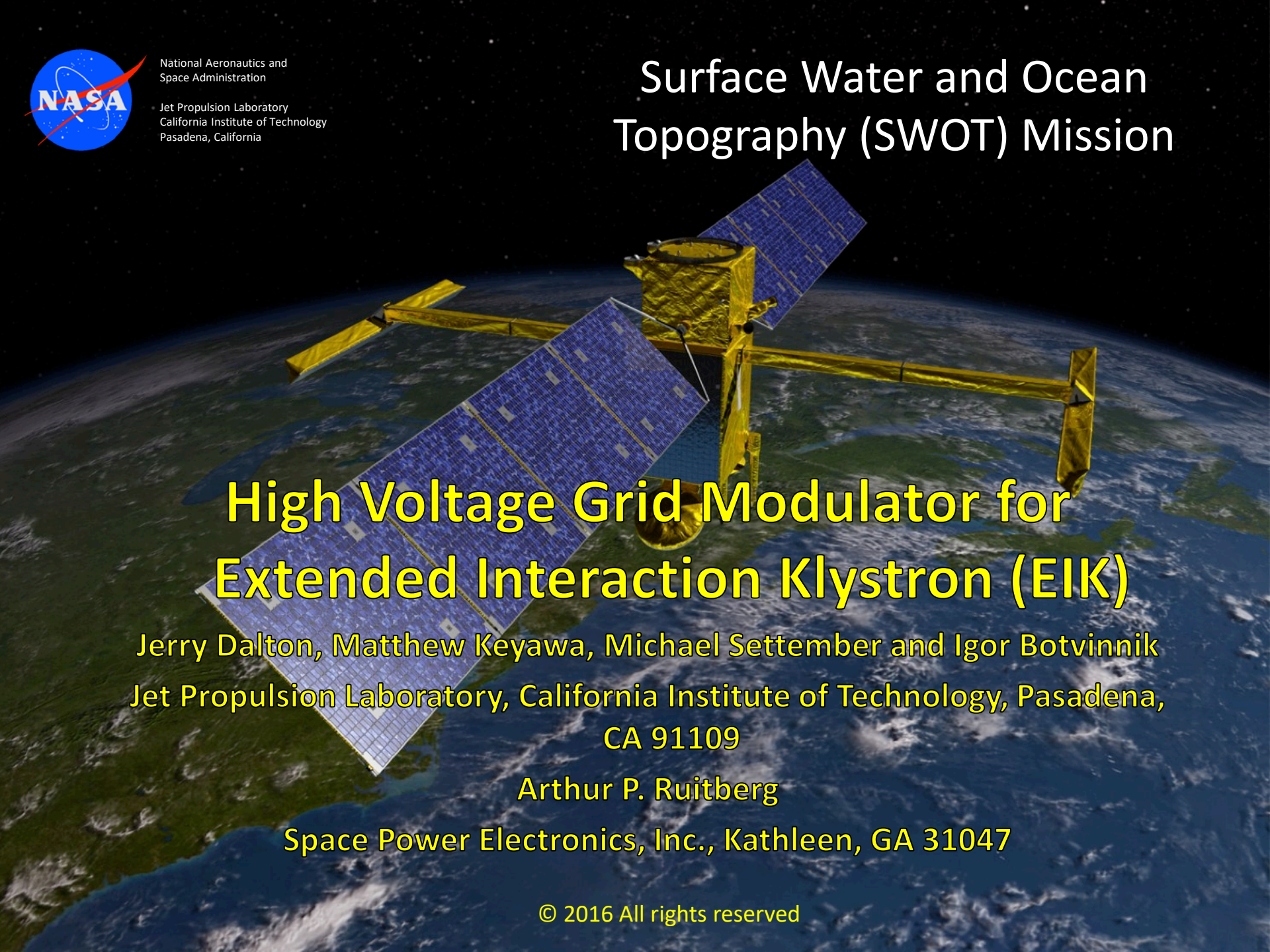

High Voltage Grid Modulator for Extended Interaction Klystron (EIK)

Jerry Dalton, Matthew Keyawa, Michael Settember and Igor Botvinnik

Jet Propulsion Laboratory, California Institute of Technology, Pasadena, CA 91109

Arthur P. Ruitberg

Space Power Electronics, Inc., Kathleen, GA 31047

© 2016 All rights reserved

SWOT Mission

- Provide sea surface heights and terrestrial water heights over a 120 km wide swath with a +/-10 km gap at the nadir track.
- Cover at least 90 percent of the globe over 21 days period.
- SWOT will have a mission lifetime of 3.5 years

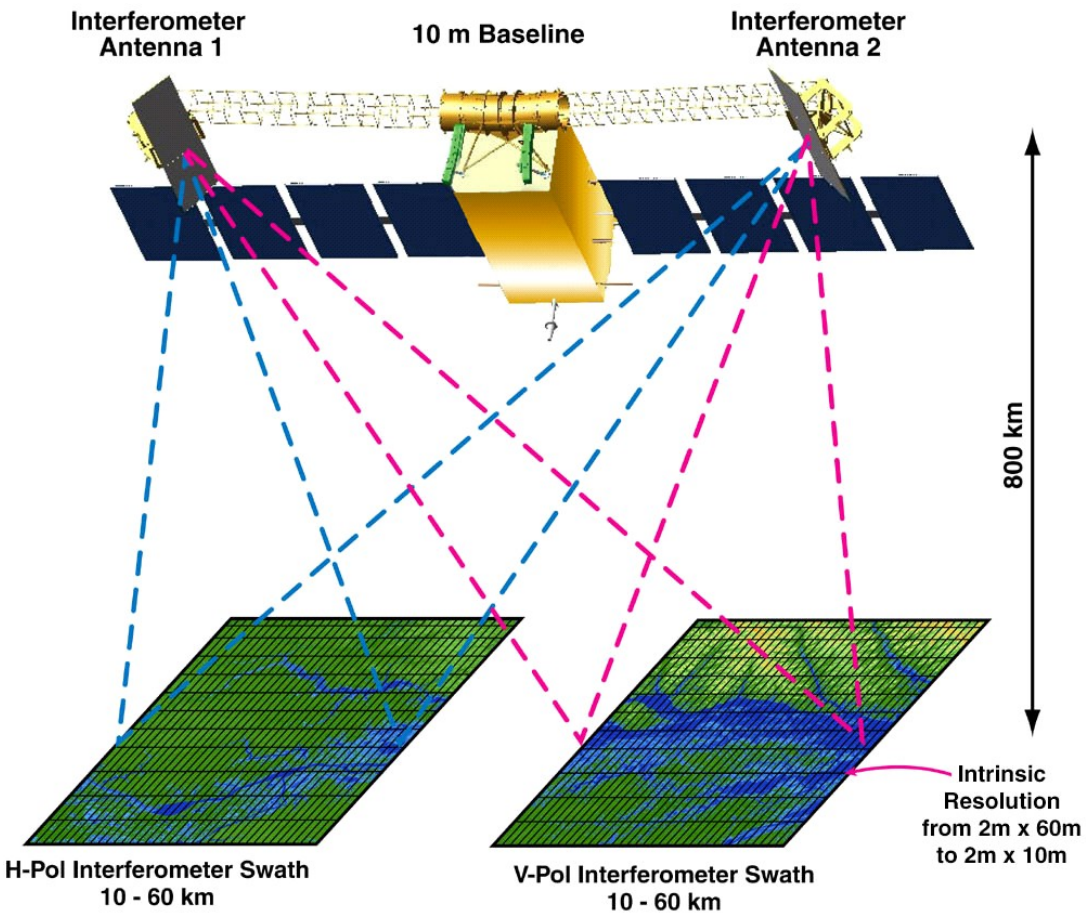

Overview

- RADAR operates by transmitting an RF pulse and measuring the characteristics of the reflection.
  - The frequency at which pulses are transmitted is called the Transmit Repetition Frequency (TRF)
- RF Power is provided by an EIK tube.
  - When the electron beam is ON and RF amplification is provided
  - To conserve power, the beam is turned OFF between pulses
  - The electron beam is controlled by the Grid
- The Grid of the EIK is biased negative relative to the cathode
  - When the grid is at -50V the electron beam is ON
  - When the grid is at -3000V the electron beam is cut OFF.
- The SWOT High Voltage Power Supply (HVPS) provides the power and grid bias voltages for the EIK
- The circuit that controls the grid voltage is called the Grid Modulator

Grid Modulator Specification

Parameter	Value
PRF	8.84 KHz ± 5%
Pulse width	3 µs to 10 µs
Rise/Fall time	<200 ns
Capacitive load	60 pF
Cut off grid voltage	-2.7 KV (up to -3KV)
Beam ON grid voltage	-10 V to -50 V

HVPS Topology

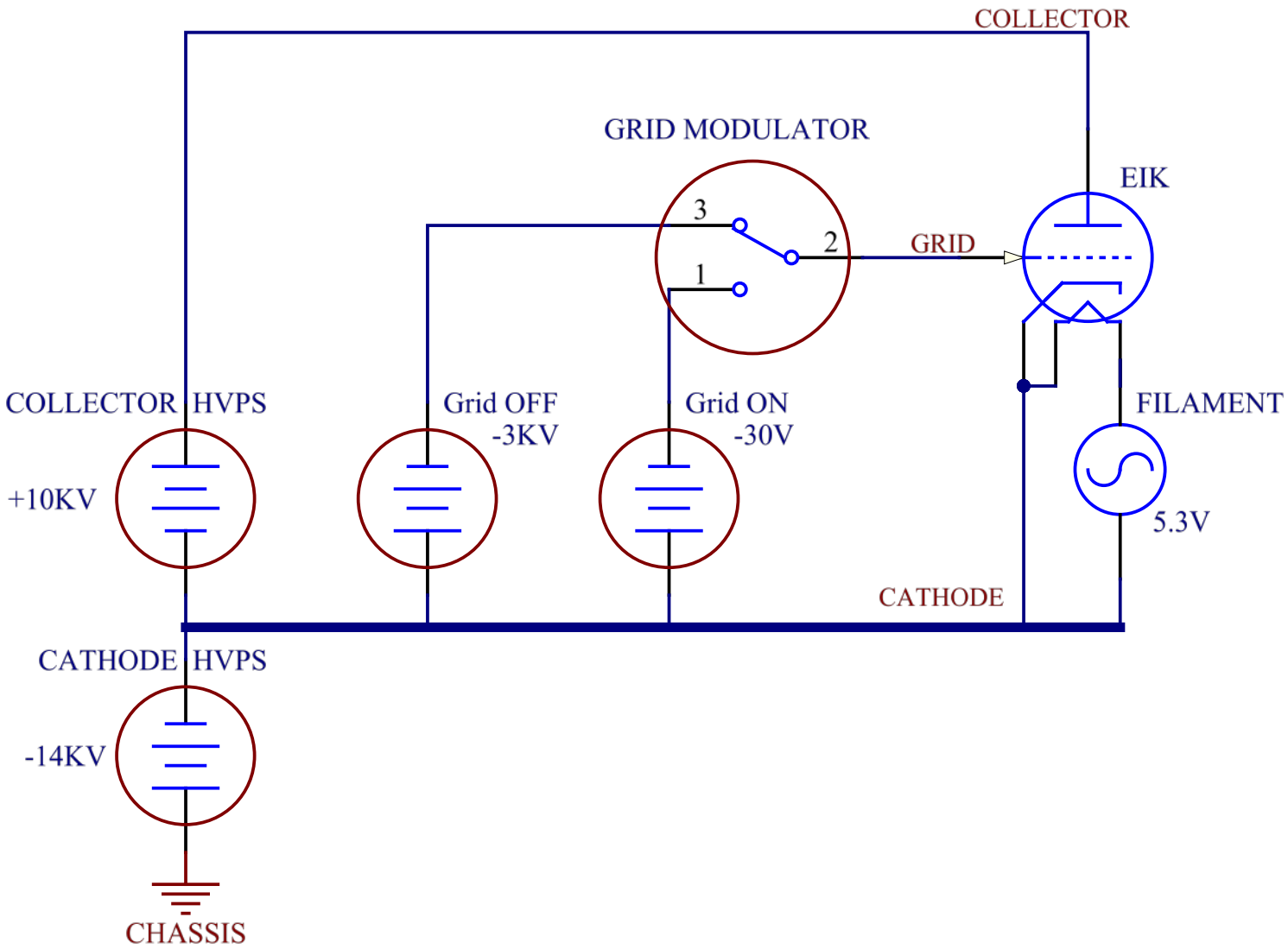

Grid Modulator Design Challanges

- The Grid Modulator must switch the grid voltage over a voltage range of 3000V in under 200nS
- The grid represents a 60pF load to the modulator
- Multiple series semiconductor switches are required to meet derating criteria for operation in space
- Uniform distribution of voltage and power on the series switches is a must for reliable operation

Grid Modulator Topology

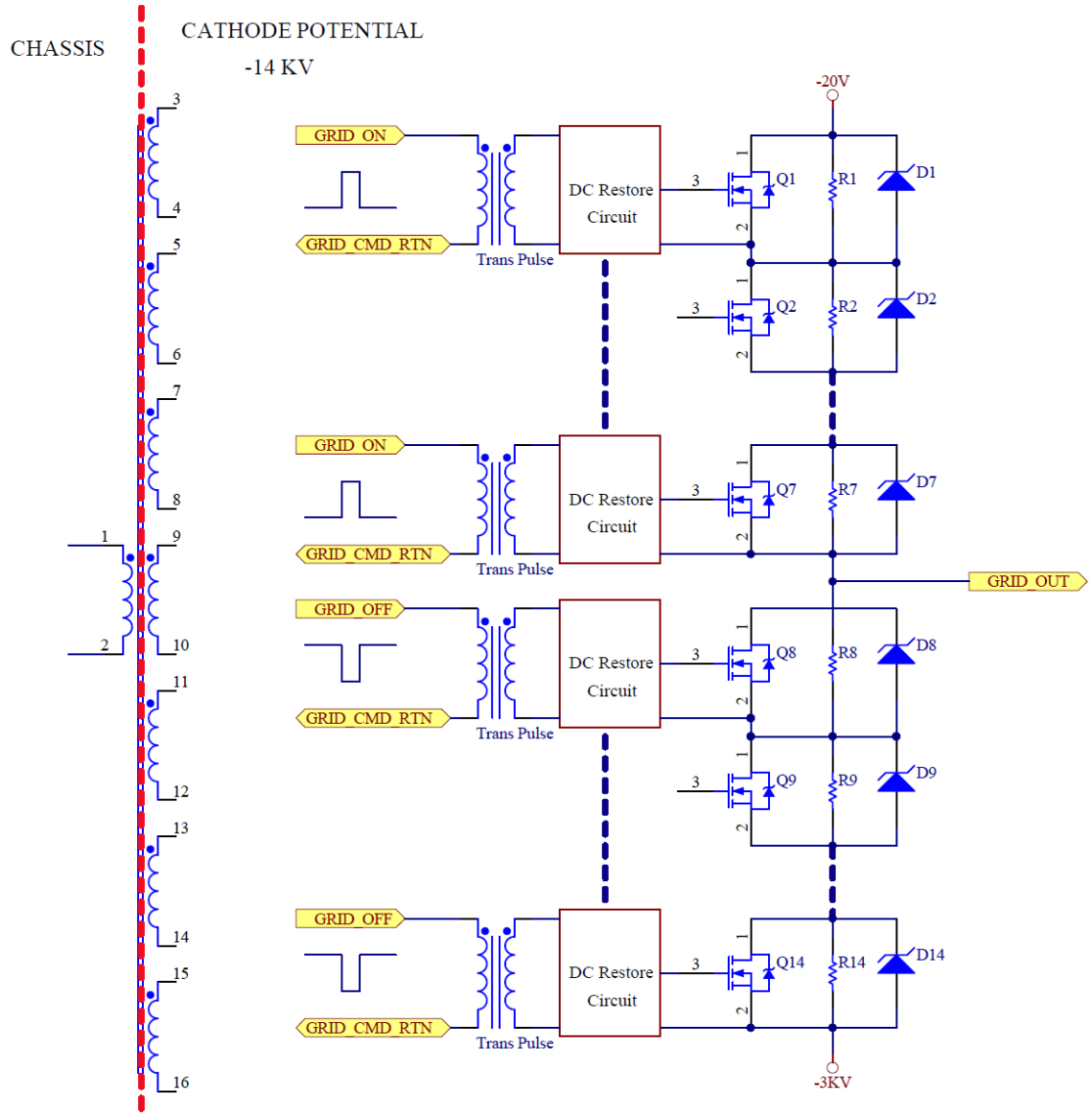

Original Grid Modulator Design

Grid OFF Switch Assembly

Grid ON Switch Assembly

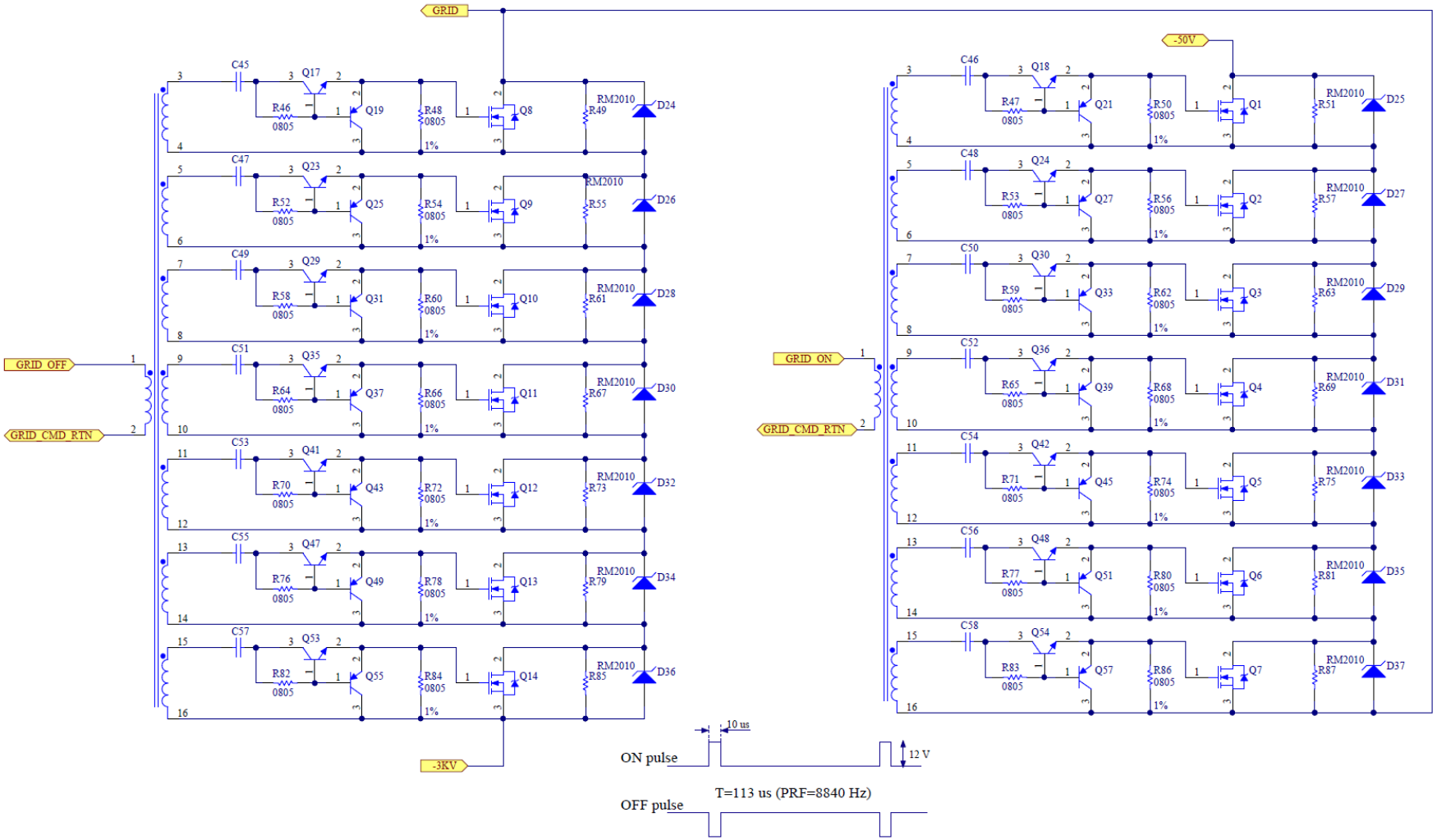

Simple Simulation Model of Grid Modulator

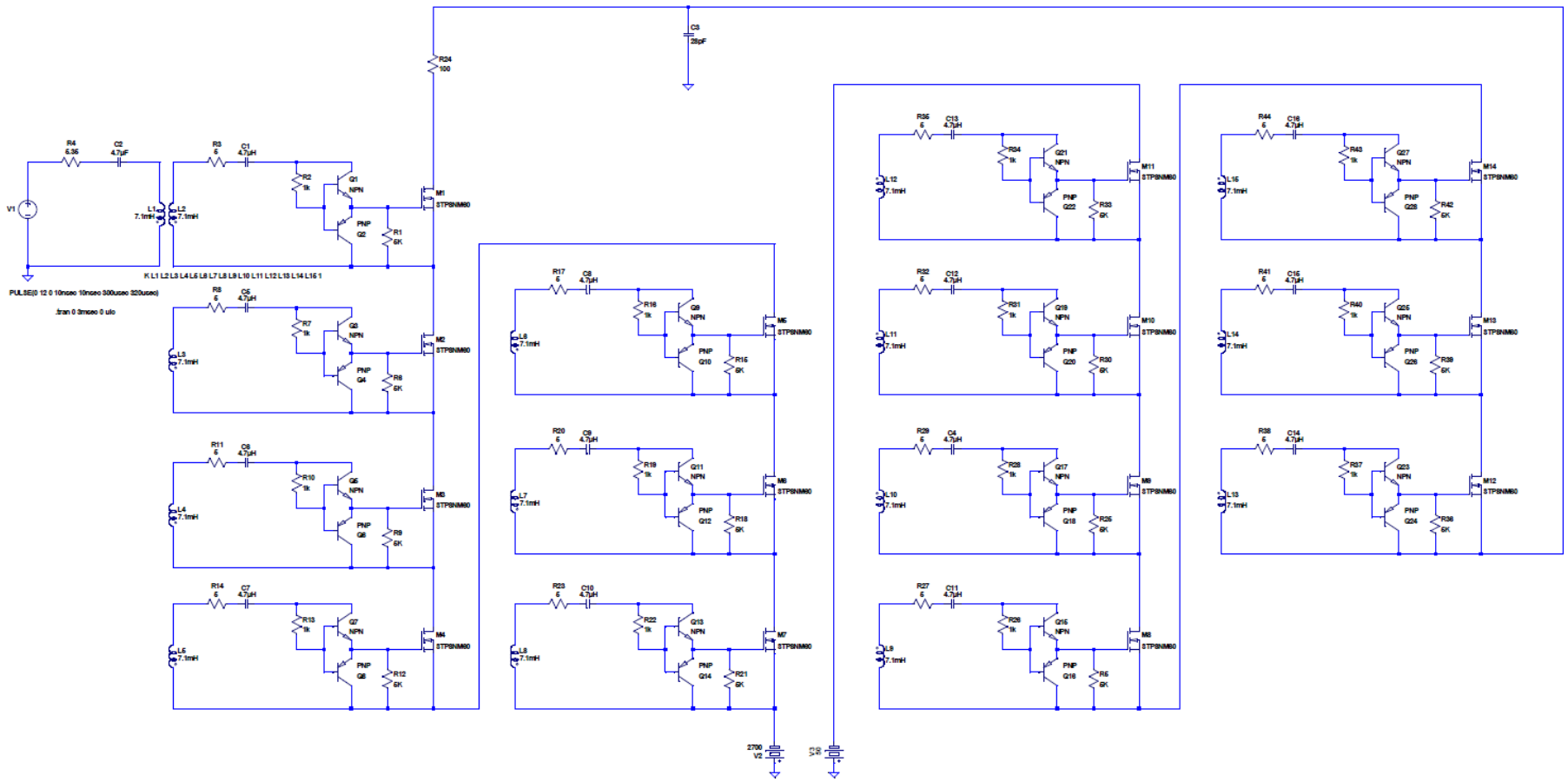

Non-Uniform Voltage Distribution

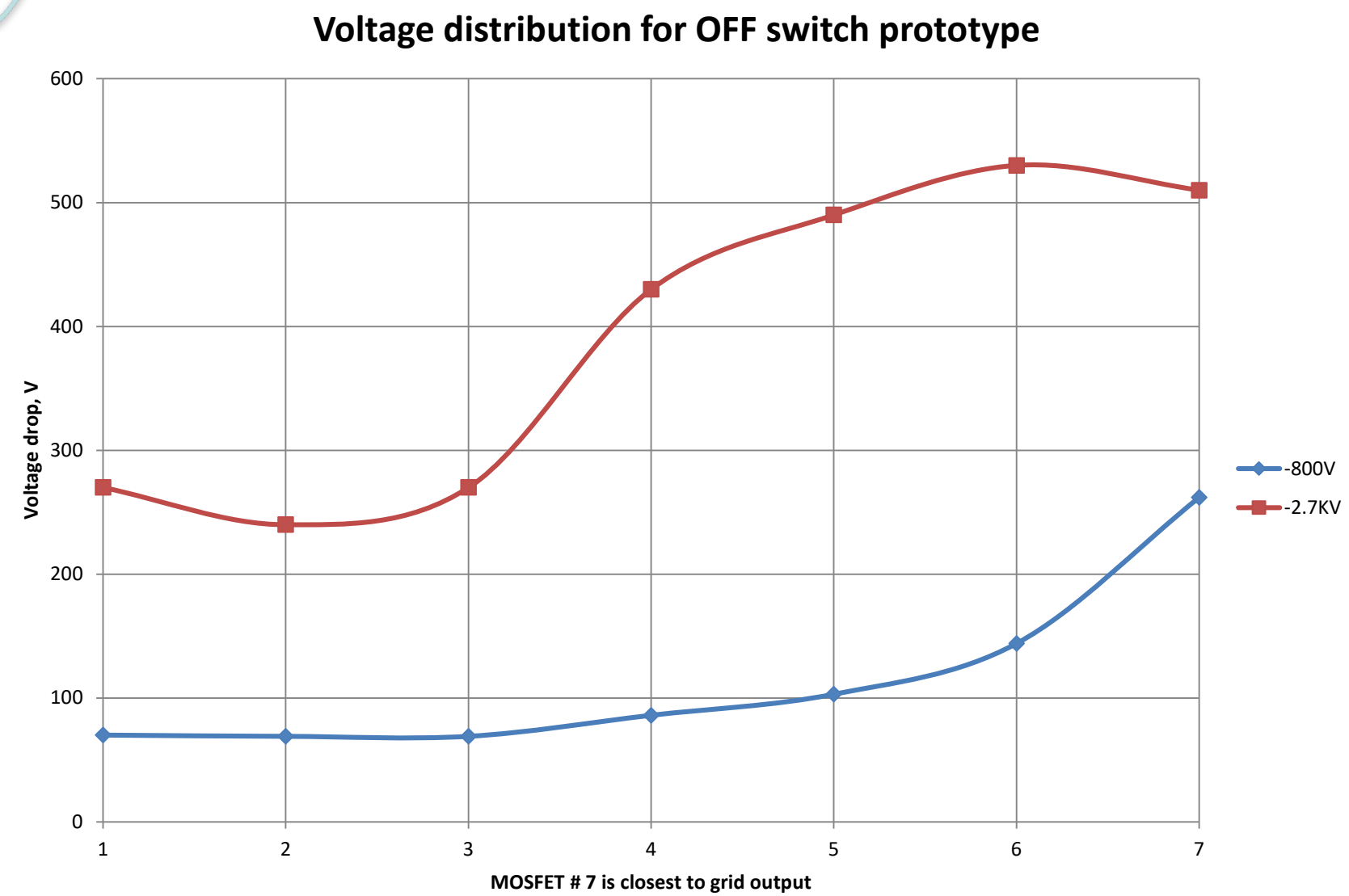

Non-Uniform Power Dissipation in MOSFETs

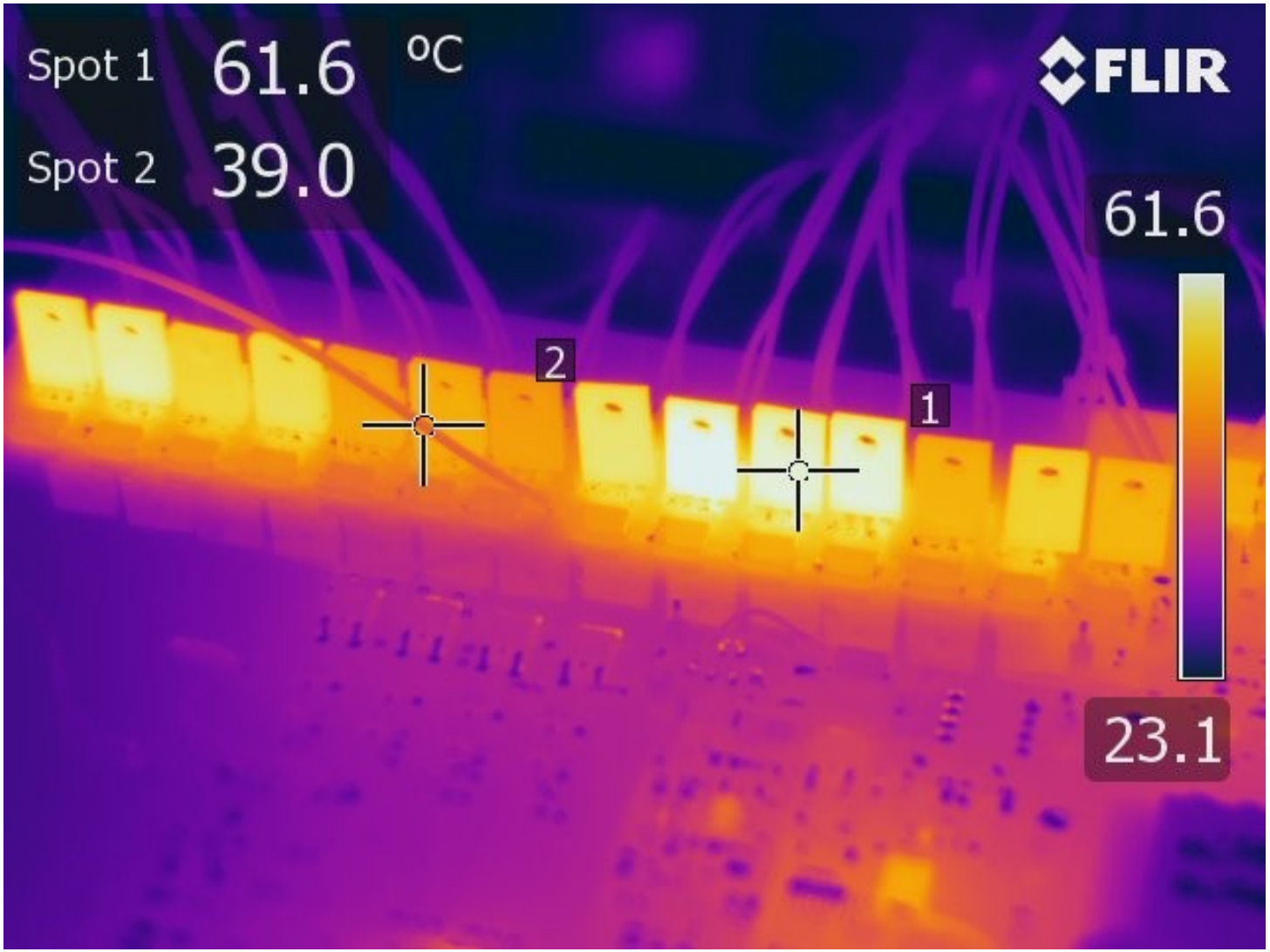

Redesigned Gate Drivers

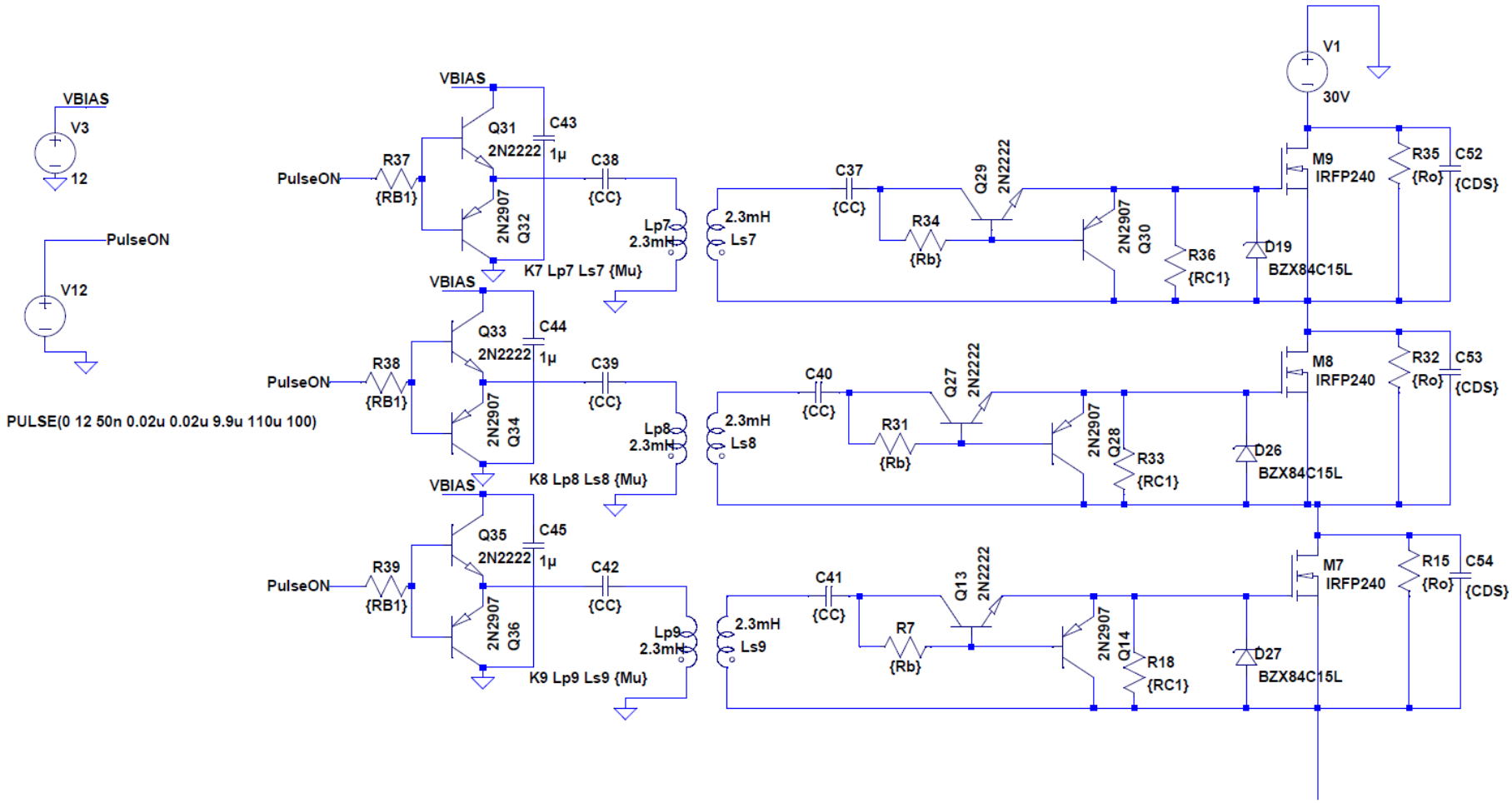

Dynamic Voltage Distribution

(Original Design)

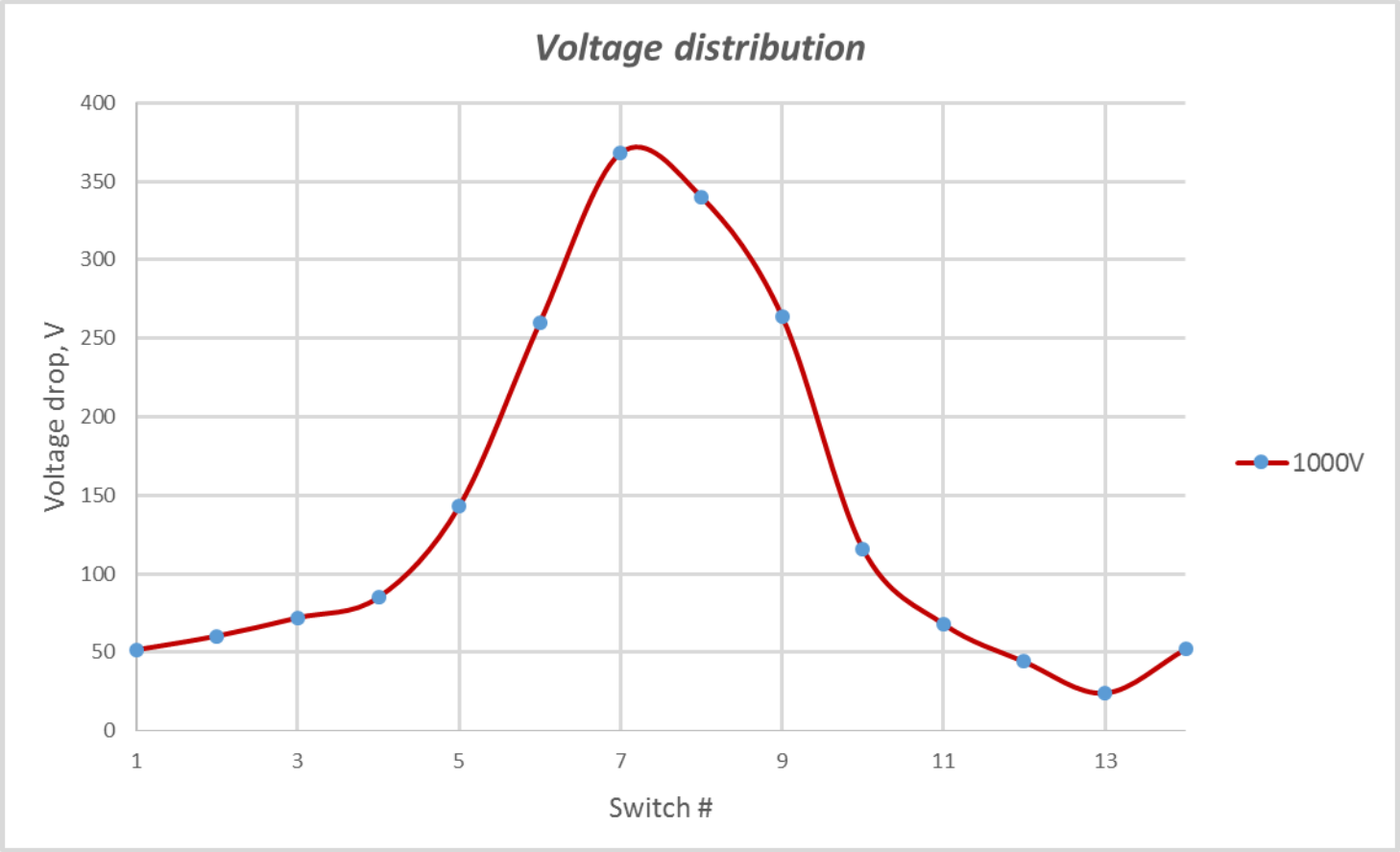

Modified Simulation Model

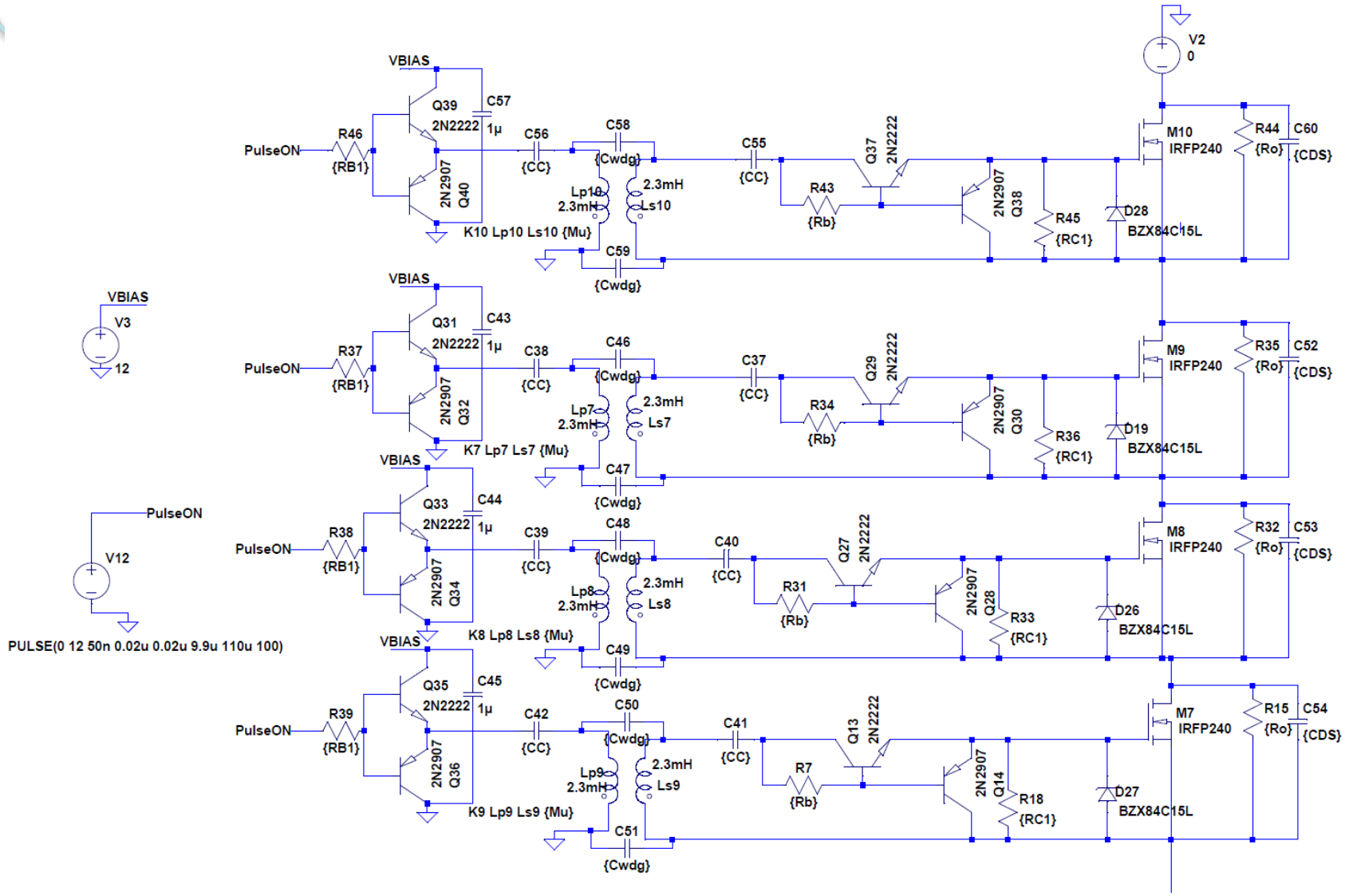

Balanced Voltage Switching

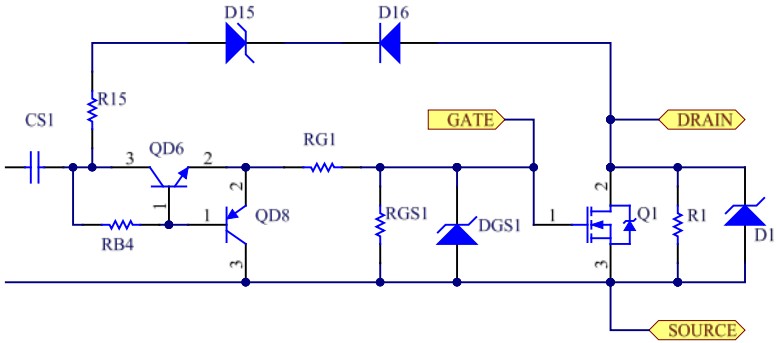

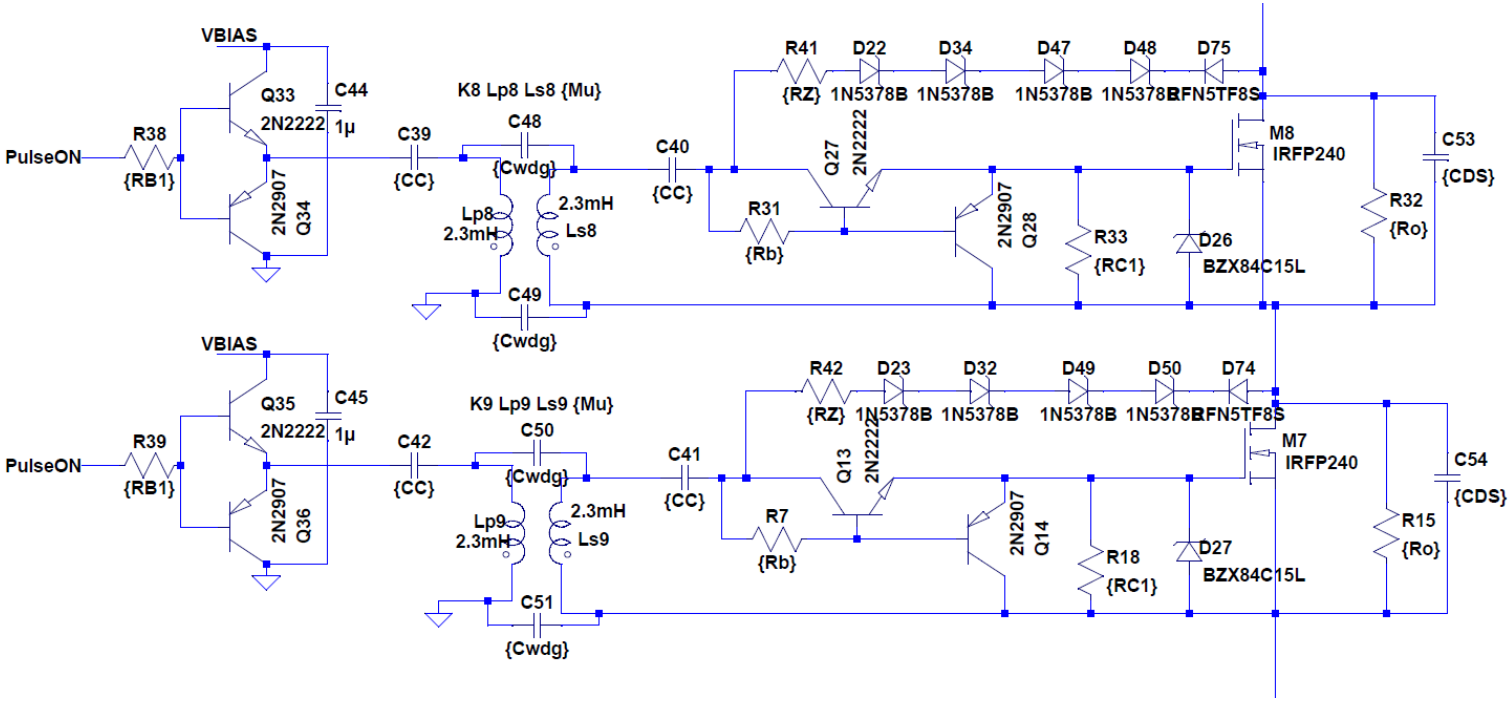

Modified Grid Modulator Schematic

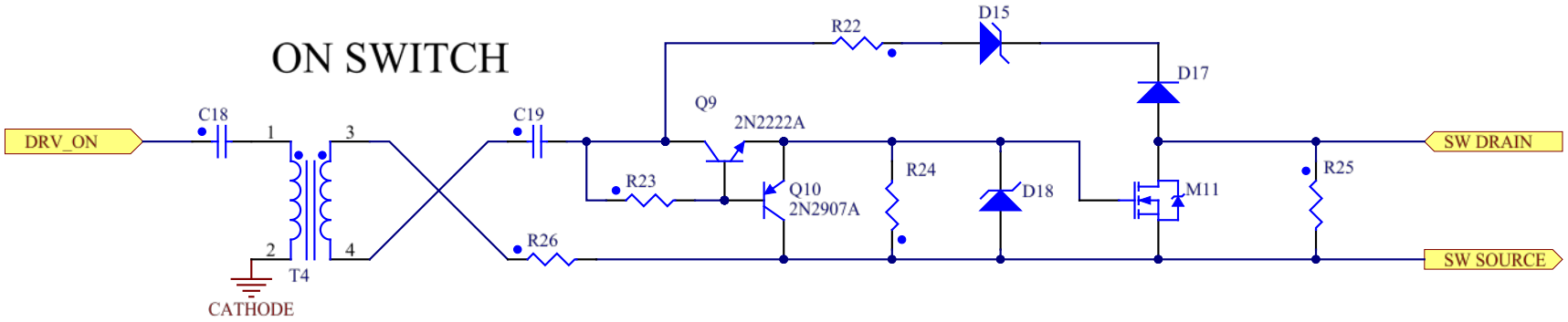

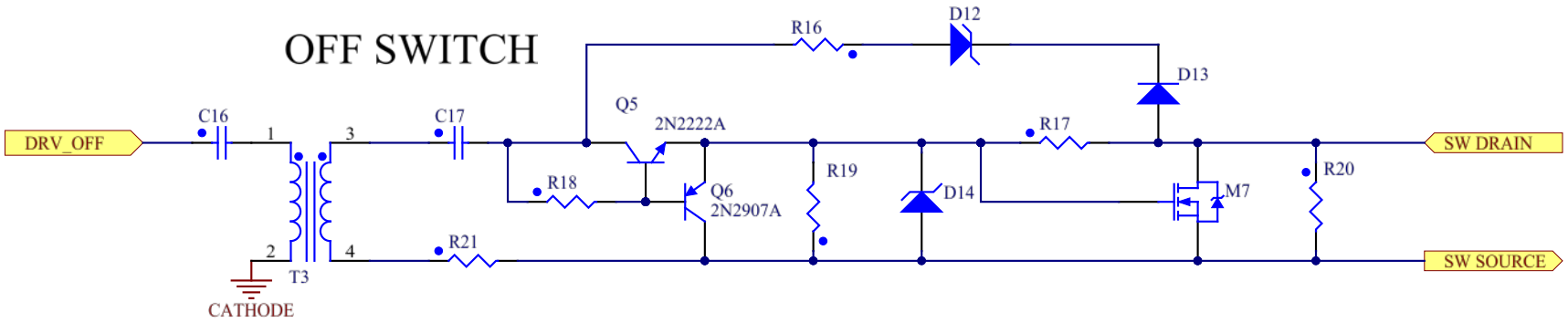

Balanced Switching Voltage Distribution

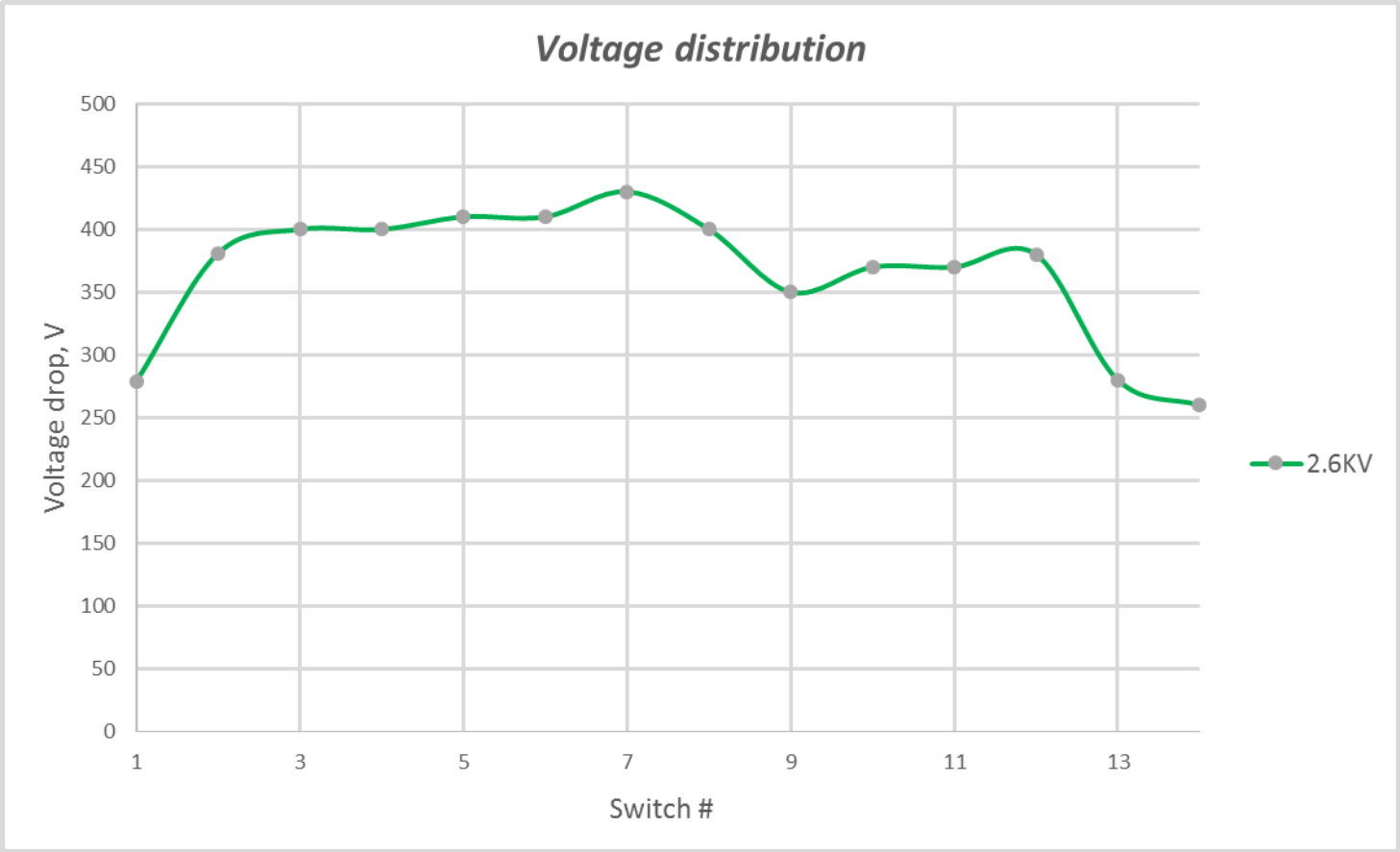

Voltage distribution with modified gate drive circuit design

Output Grid Voltage

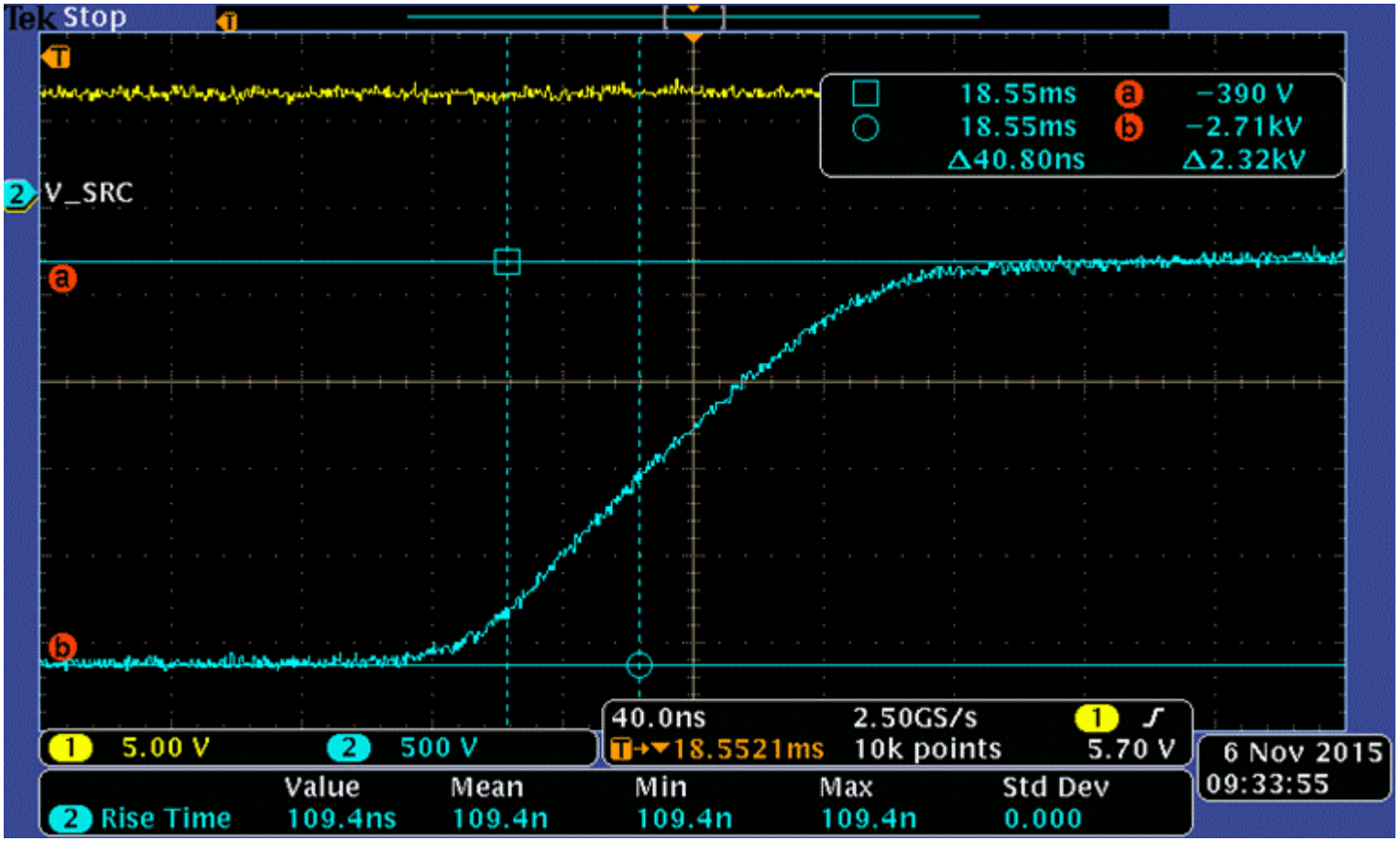

Grid voltage rise time (Ch. 2) in order of 110 ns

Acknowledgements
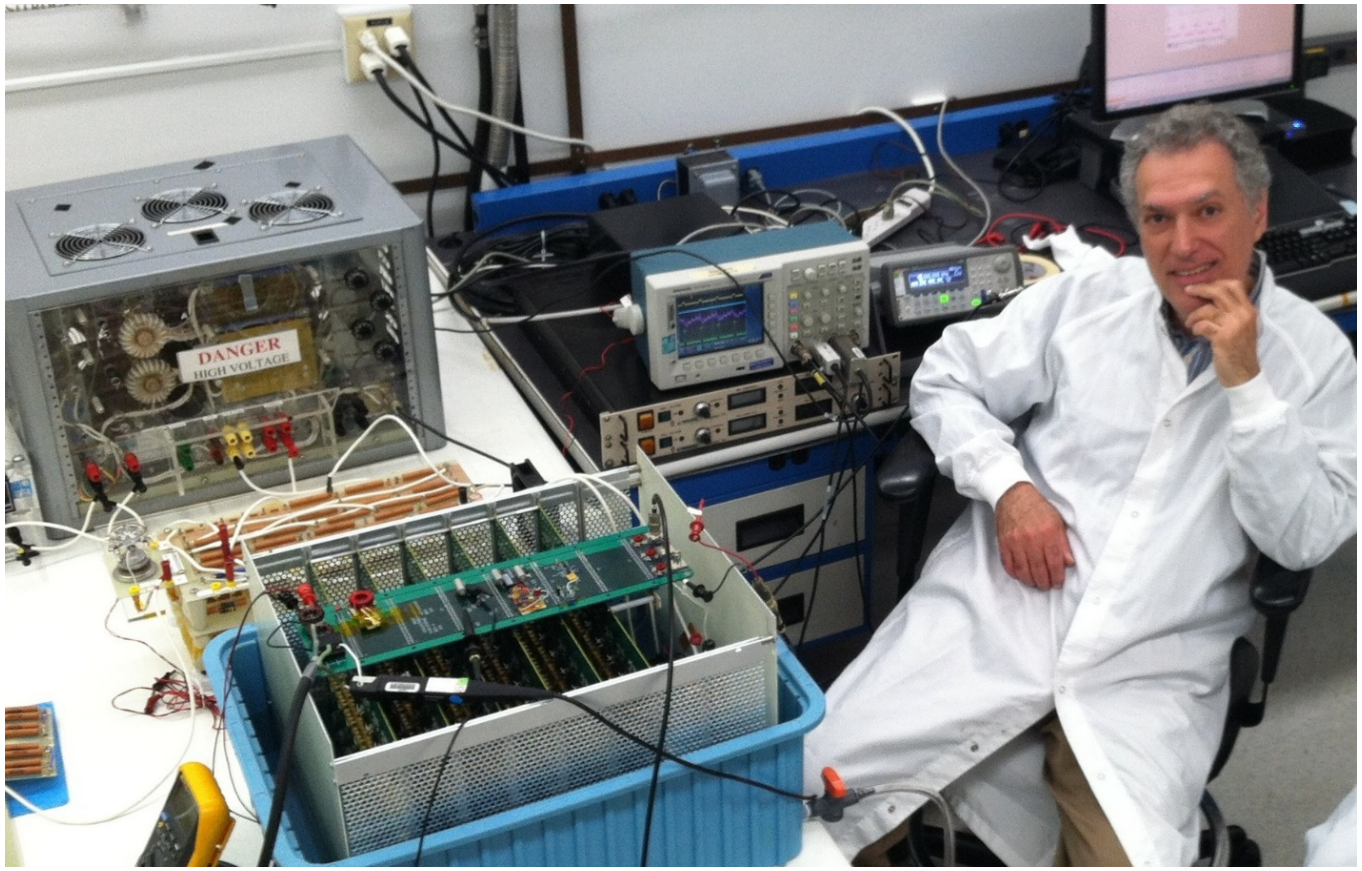
The authors wish to thank Vatche Vorperian (JPL) for his contribution to design and analysis of the grid modulator circuit and many other subsystems of SWOT HVPS