EUROPA MISSION

Cloud-Based Orchestration of a Model-Based Power and Data Analysis Toolchain

Ethan Post

Jet Propulsion Laboratory

California Institute of Technology

Outline

- Introduction and Background
- Proposed flight system power and data analysis
- Specialized software tools
- Distributed analysis workflow challenges
- Integrated analysis approach
- Challenges
- Benefits
- Summary

Introduction and Background

- Vast liquid water ocean under icy surface of Europa, one of Jupiter's moons
- Potentially habitable, so we want to go there

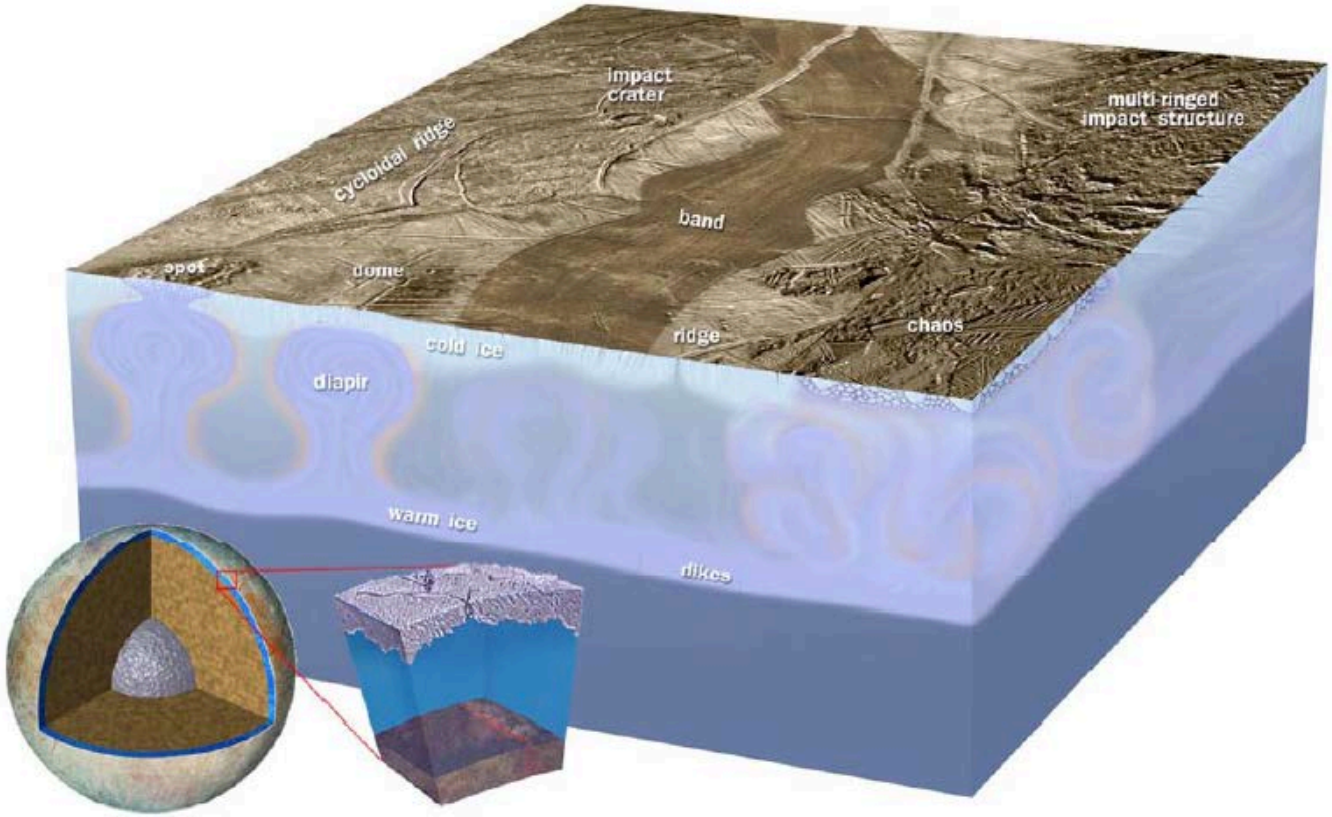

Introduction and Background

- Proposed Europa Mission to send solar-powered spacecraft to orbit Jupiter and conduct multiple flybys of Europa
  - ~2.5 years of Europa science
  - ~3.5 years of simulation
- Payload would contain numerous scientific instruments with varying resource demands
  - power consumption
  - data acquisition, storage, downlink

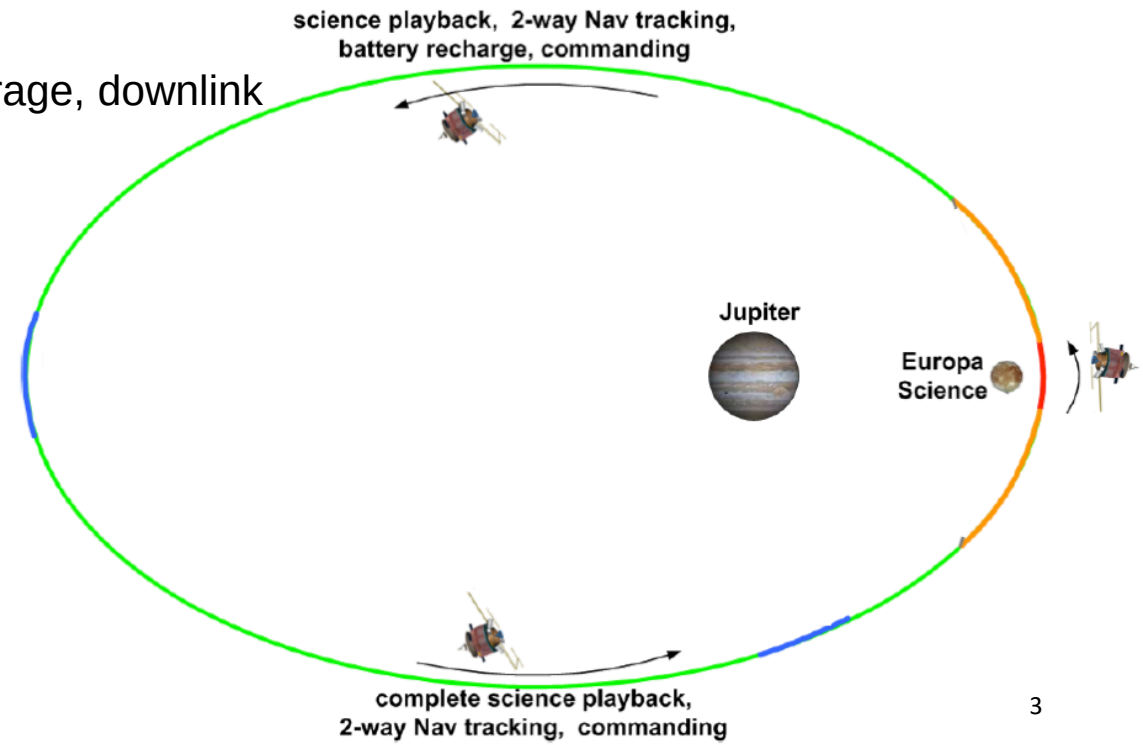

Proposed Flight System Power and Data Analysis

- Spacecraft must satisfy power and data needs
  - solar array sizing
  - battery sizing
  - data storage
  - Deep Space Network passes
- Examples of relevant factors include:
  - trajectory (eclipse periods)
  - solar array shadowing due to surrounding hardware
  - solar array sun angle (varying during science maneuvers)
  - science instrument behavior timelines

(Partial) Analysis Workflow

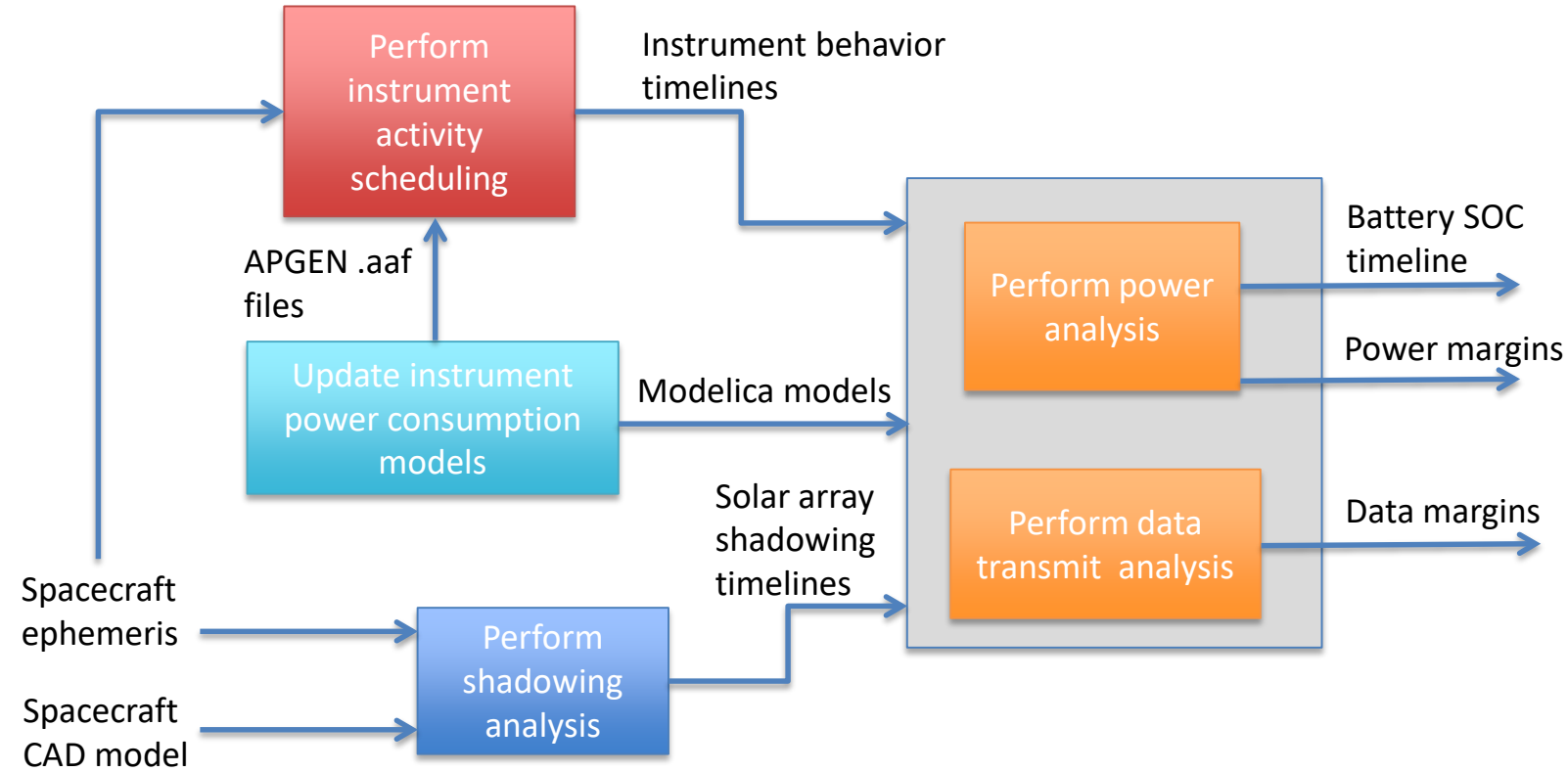

APGEN

Mathematica + SystemModeler

STK + MATLAB

Manual work

Numerous Specialized Software Tools

- APGEN (activity scheduling and state timeline generation)
- MMPAT (detailed power analysis)

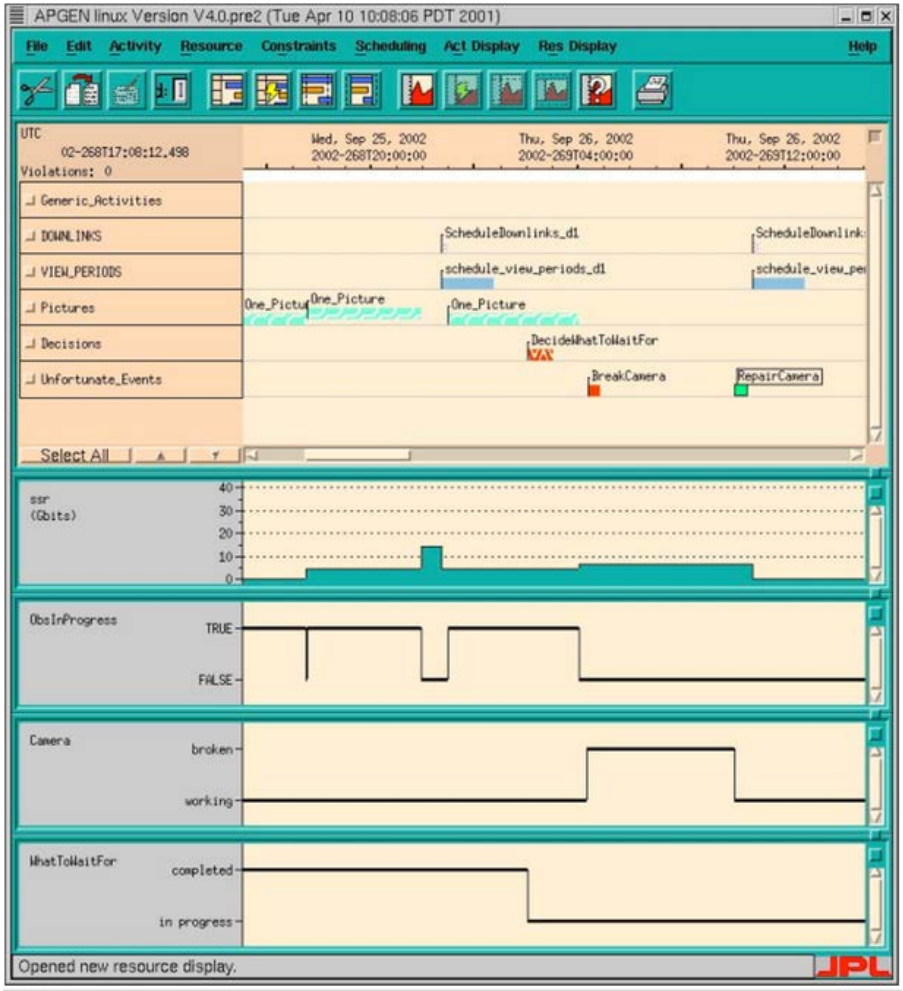

Numerous Specialized Software Tools

- Siemens NX, Anark Core (3D CAD geometry and format conversion)
- AGI STK + custom Jupiter environments plugin, MathWorks MATLAB (solar array shadowing timelines and radiation analysis)

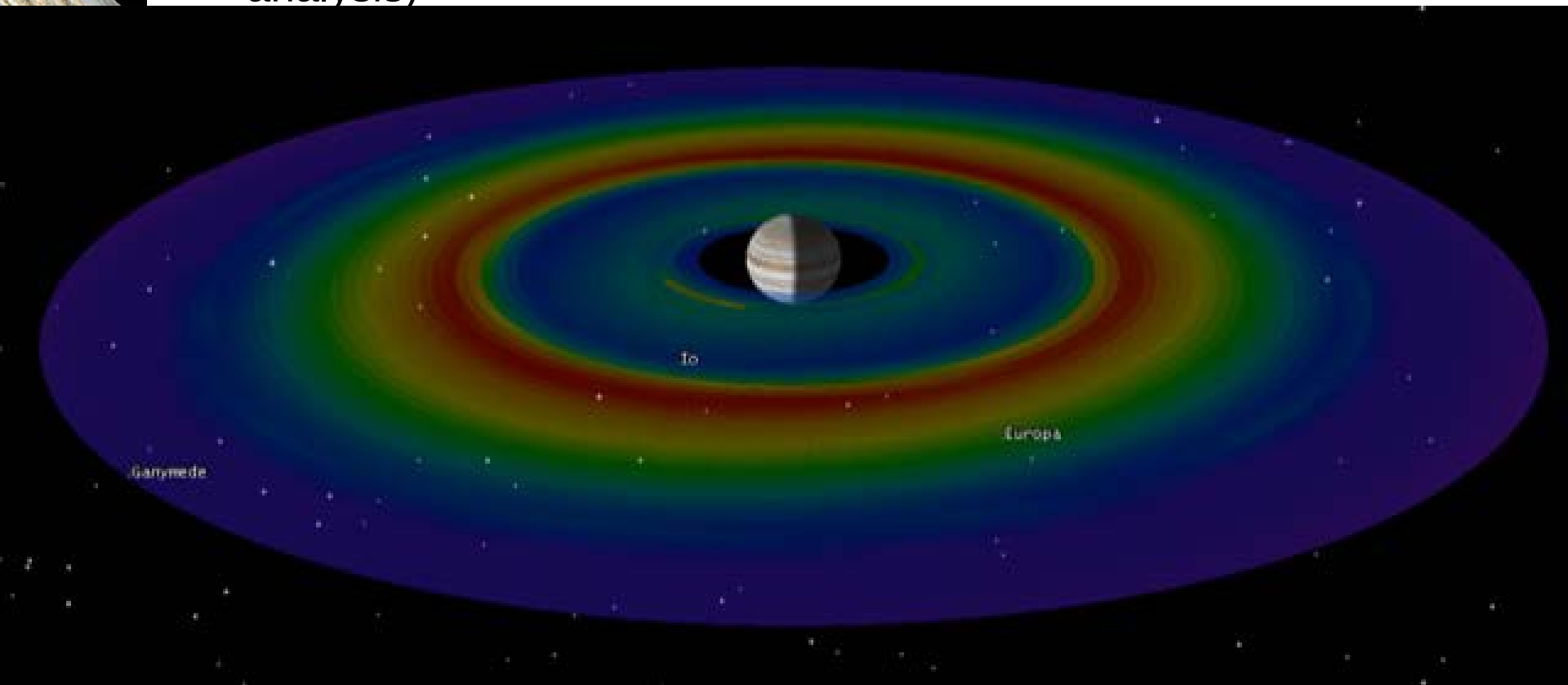

Numerous Specialized Software Tools

- Wolfram SystemModeler (power and data usage simulations)
- Wolfram Mathematica (modify SystemModeler inputs, post-process results)

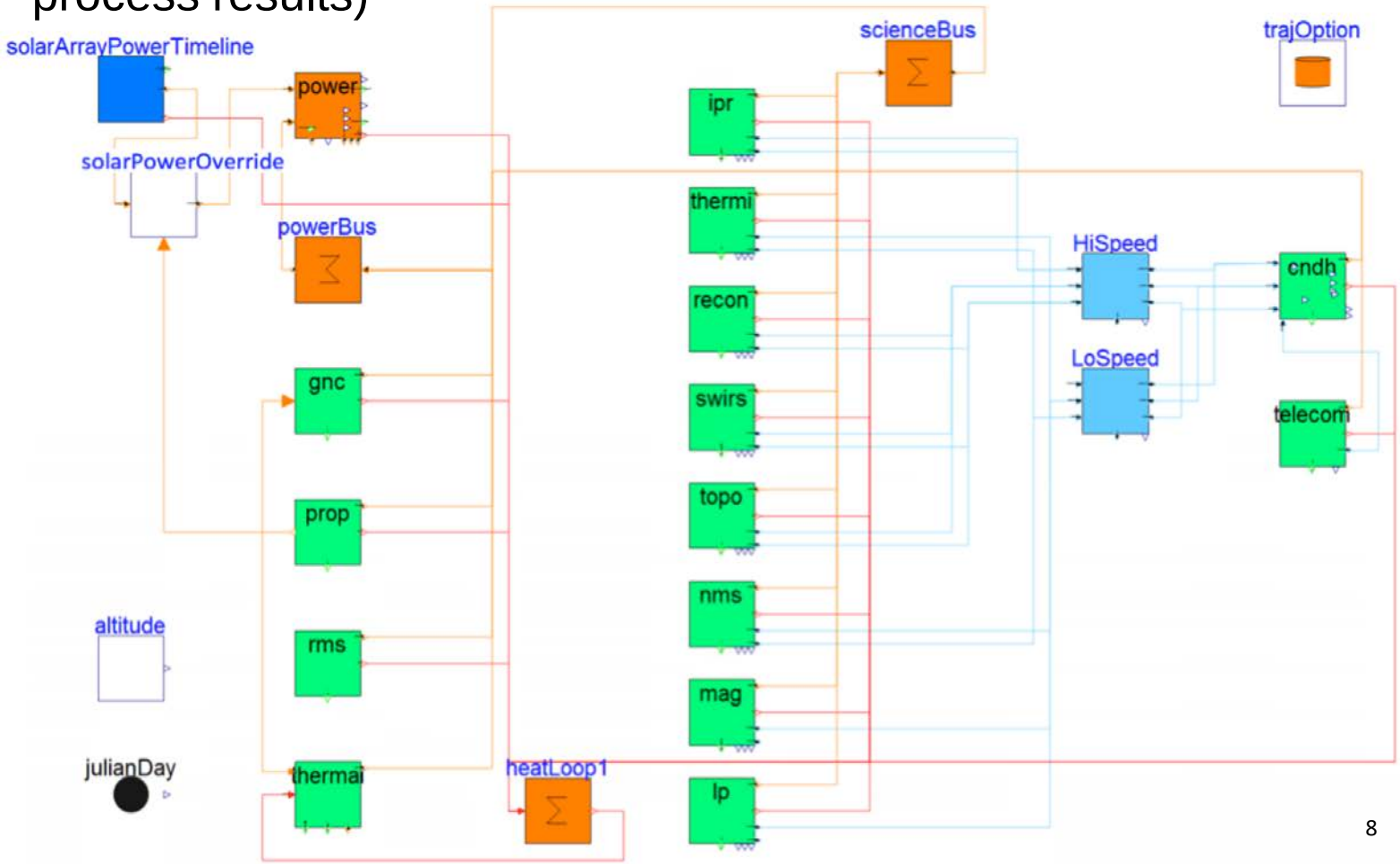

Distributed Analysis Workflow Challenges

- Converting data from upstream analysis to format suitable for downstream analysis is manually intensive and time consuming
- Numerous domain experts must coordinate their analysis time, modeling assumptions
- Data consistency for inputs to different tools
- Traceability for end to end simulations

Integrated Analysis Approach

- SysML based input-output data repository synchronized with Engineering Modeling System (EMS)

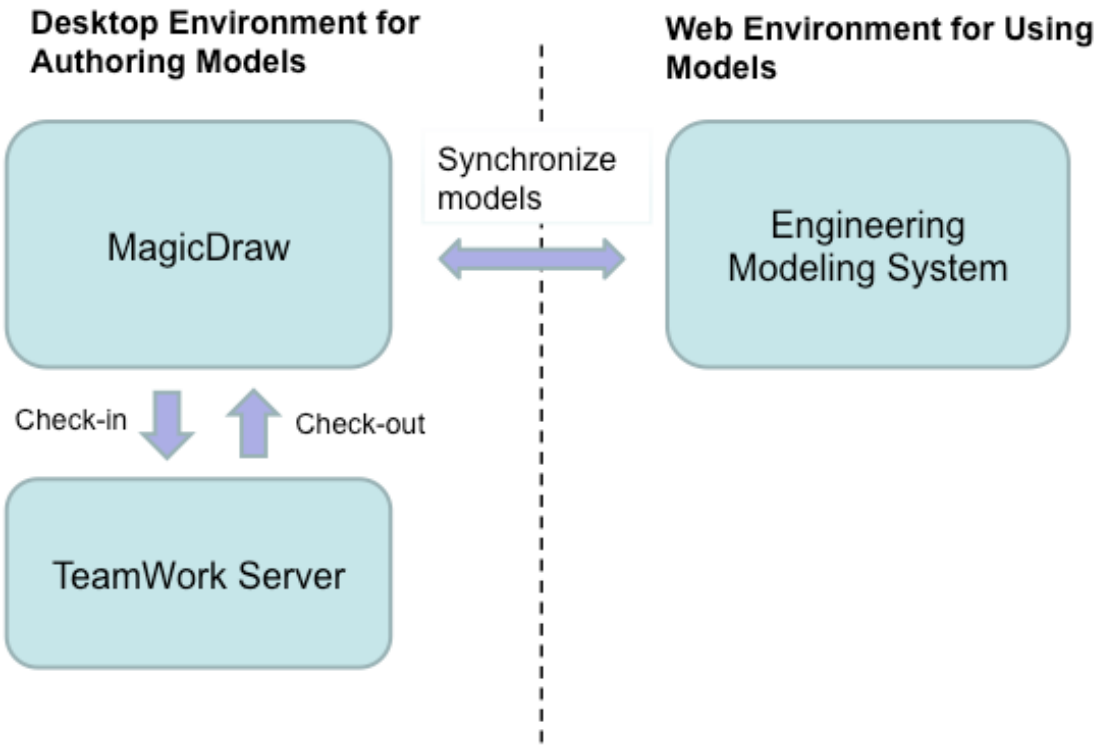

Integrated Analysis Approach

- SysML model data transformed into formats suitable for downstream tools*
  - Instrument power consumption definitions transformed to Modelica .mo files for SystemModeler
  - Resource definitions transformed to .aaf input files for APGEN
- APGEN output timelines transformed to JSON for storage and visualization in Timeline Management System (TMS)

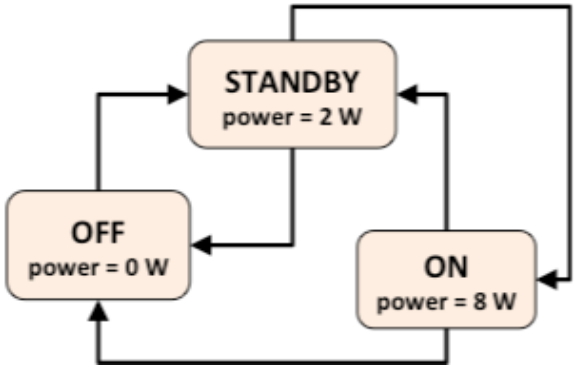

*Presented by Bjorn Cole in "Multidisciplinary Model Transformation through Simplified Intermediate Representations" (session 10.0411 on Wed)

Integrated Analysis Approach

- Phoenix Integration ModelCenter Cloud used as orchestrator for analysis tools

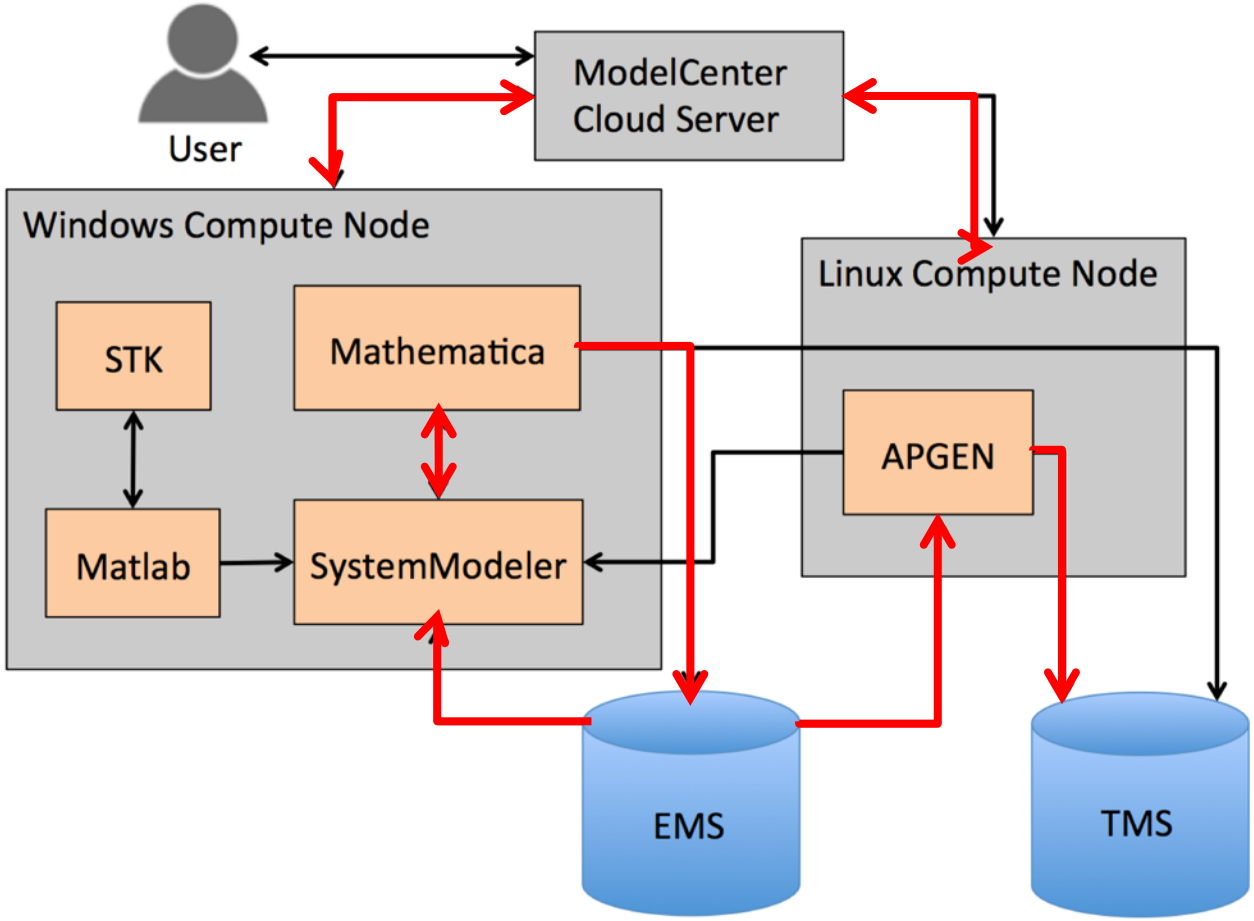

Integrated Analysis Approach

- How do workflow models get into ModelCenter Cloud?

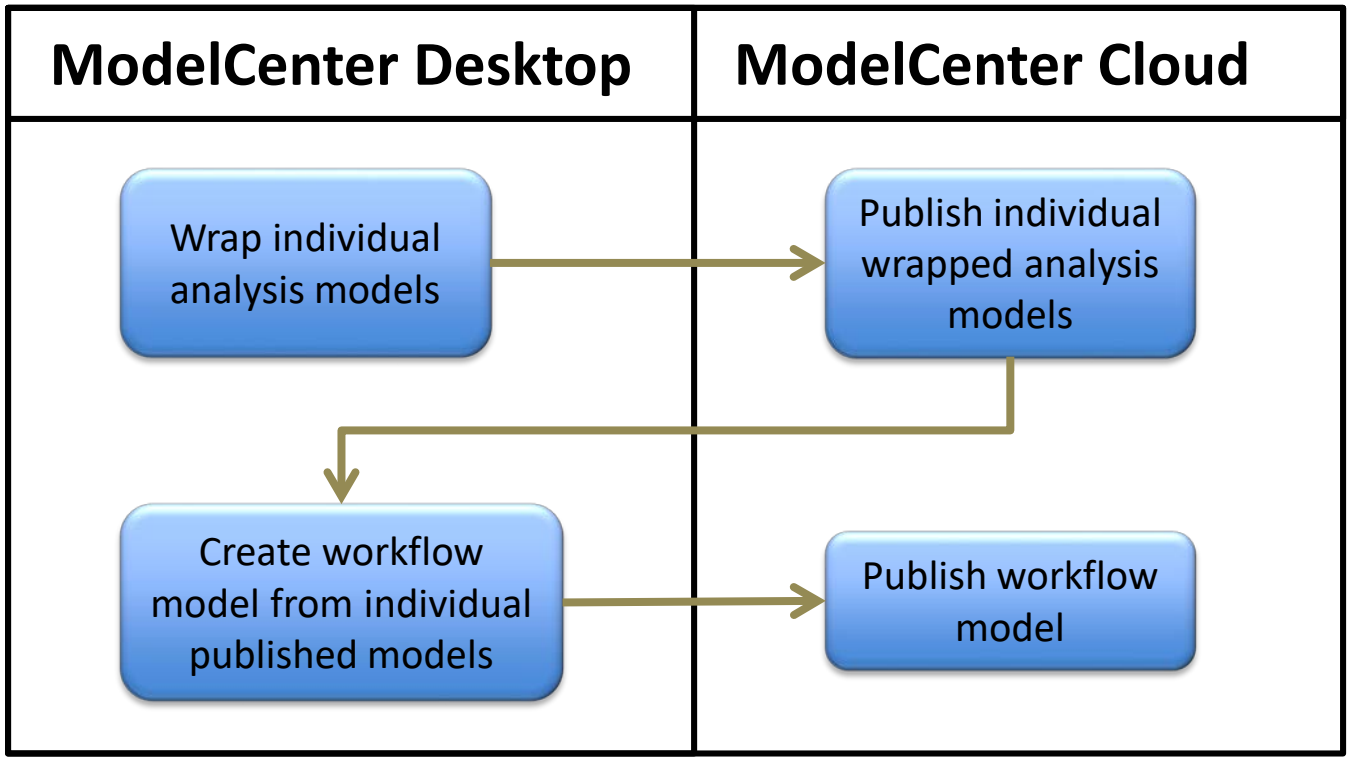

Challenges Encountered

- Variable extraction and exposure
- Complexity and learning curve of wrapping steps
- Multiple platforms (Windows, Linux)
- Authentication (tokens as an approach)
- Server administration (frequently updating numerous software tools)

Benefits Realized

- Improved versioning of analysis models, workflows, timelines
- Automated data conversion (JSON, TMS)
- Traceability through archived simulation history with saved inputs and outputs
- No need to install cumbersome local software stacks
- Simulations accessible to wider user base via a web service
- Easier to perform quick “what-if” studies

Summary

- Proposed Europa mission flight system design requires simulation from numerous software tools
- Initial distributed power and data analysis workflow posed difficulties for traceability, configuration management, turnaround time
- An integrated analysis toolchain was created to solve the problems with the distributed workflow
- Broad applicability to other design and analysis problems
- Initial steps towards workflow automation have been met with challenges
- Realized benefits to traceability, configuration management, simplified single-point simulation execution, user accessibility

Acknowledgements

- Co-authors
  - Bjorn Cole
  - Kevin Dinkel
  - Hongman Kim
  - Erich Lee
  - Bassem Nairouz