Small Areostationary Telecommunications Orbiter Concepts for Mars in the 2020s

Robert E. Lock, Charles D. Edwards Jr., Austin K. Nicholas, Ryan Woolley, David J. Bell
Jet Propulsion Laboratory, California Institute of Technology

March 8, 2016

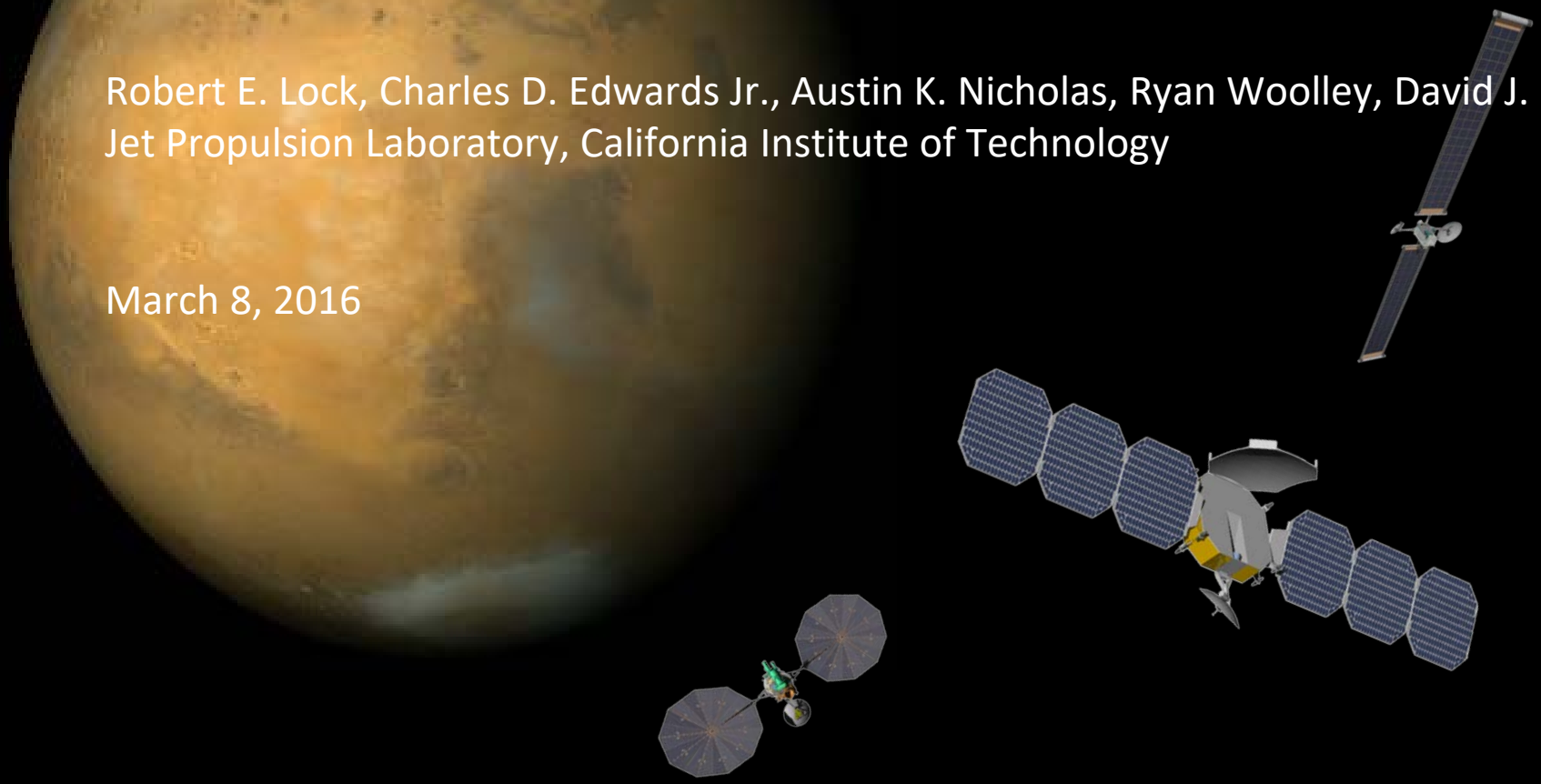

Table of Contents

- Introduction and Summary
- Potential Future Networks for Mars
- Early Steps to Establish Network Capability
- Drop-Off Small Telecom Orbiter
- Co-Manifest Launch Telecom Orbiter
- Conclusions

Vision for Mars Communications and Navigation Network

- Future areostationary telecom orbiters would benefit both human exploration and science missions.
  - Provide high-bandwidth trunk lines with 100% availability to human outposts for communication with Earth.

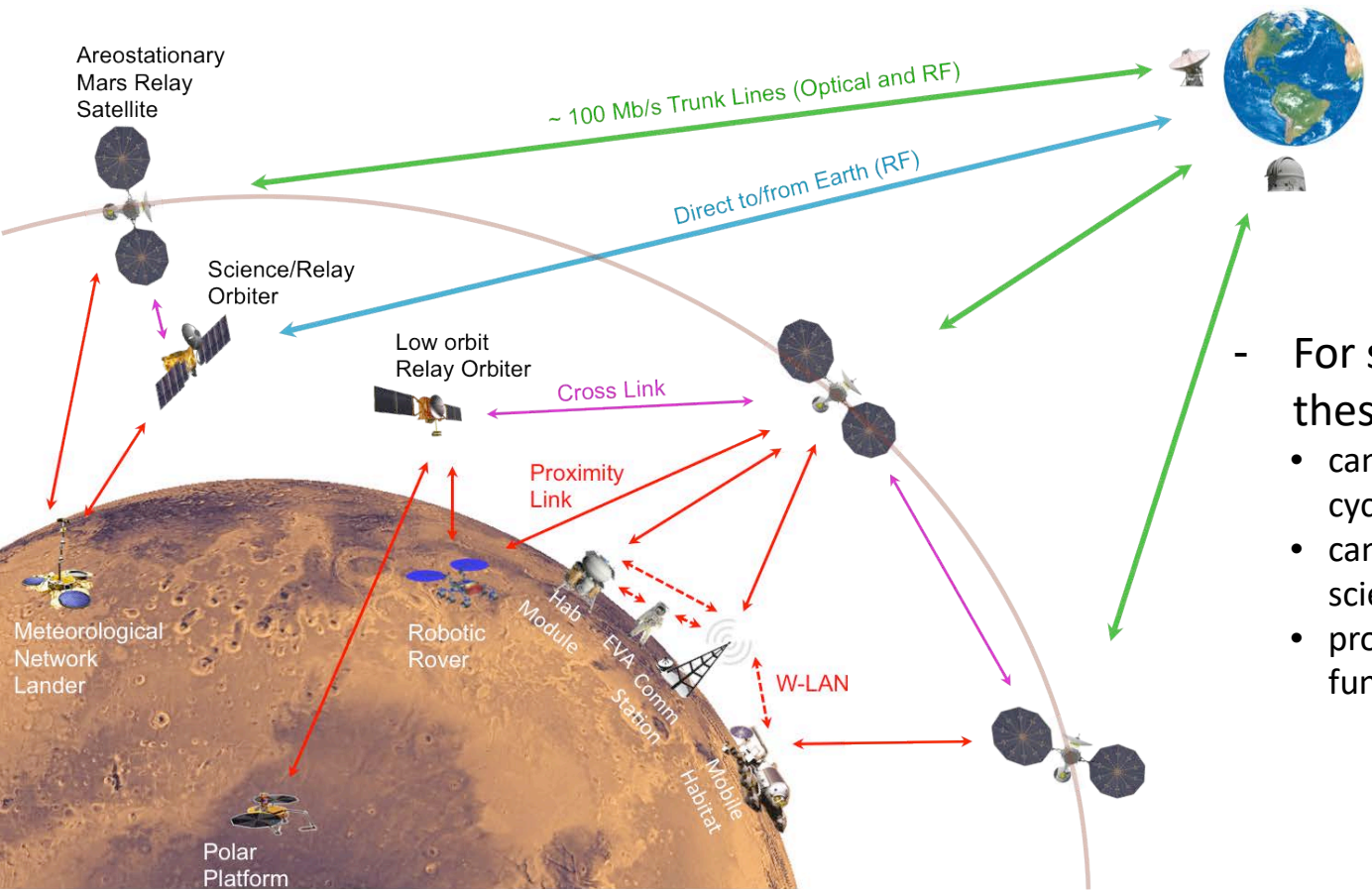

- For science surface assets these orbiters:
  - can reduce the operational planning cycle for scientific objectives
  - can reduce telecom burden of other science orbiters in low-orbit
  - provide simple pointing and functionality
    - low long-term operating costs
    - long spacecraft lifetimes

Future Network Performance Expectations

- Mars areostationary relay satellites (MARSATs) as described in DRA 5, can provide continuous, high-bandwidth communications to human outpost and other science assets on Mars surface (see table below)
- Initial areostationary telecom orbiter network would provide less performance and be less robust than those needed for support of future human exploration
  - Would demonstrate key functions and technologies and provide similar services
  - Enable development and deployment of ground system, tools, and experience

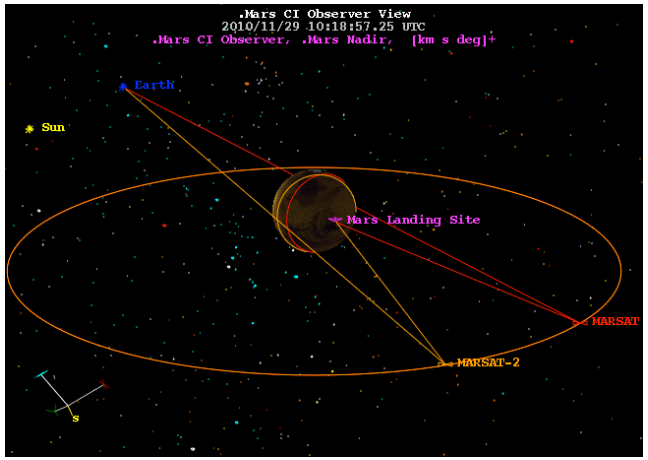

DRA 5.0	High Performance Option	Descope Option
DTE Link	**250 Mb/s Downlink** • *6m X/Ka HGA, 500W TWTA* • *4x70m DSN equivalent aperture*	**25 Mb/s Downlink** • *6m X/Ka HGA, 200W TWTA* • *1x70m DSN equivalent aperture*
Proximity Link	**2x100 Mb/s Return Link** • *Two 2m X/Ka Antennas* • *User Terminal: 20 cm/10W*	**2x10 Mbps Return Link** • *Two 1m X/Ka Antennas* • *User Terminal: 20 cm/5W*

Two Low Cost Orbiter Types Were Studied for Initial Capability

- Drop-Off Small Telecom Orbiter
  - ~200 kg
  - Delivered by larger orbiter
  - High altitudes such as Areostationary
  - High relay rates, moderate direct-to-Earth rates

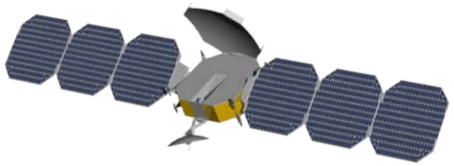

- Co-Manifest Launch Telecom Orbiter
  - ~1000 kg
  - Launches to GTO (needs only ½ Launcher)
  - Uses Solar Electric Propulsion (SEP) to reach Mars
  - Very high rates for both DTE and Relay

Pre-decisional. For planning and discussion only.

Drop-Off Small Telecom Orbiter Introduction

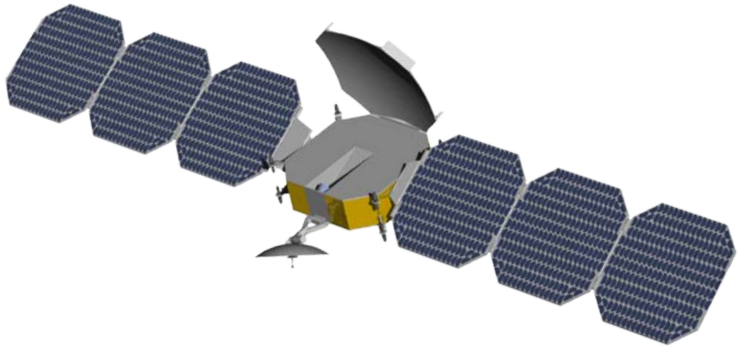

- Mission Overview
  - Deployed from SEP orbiter (mothership) bound for lower Mars orbits
  - Mothership deploys orbiter into desired orbit
  - Areostationary orbit used as proxy for all orbits above 2000 km
  - Single string design with some functional redundancy in payload
  - Reaction control subsystem sized for attitude control and orbit maintenance only
  - All communication types available for consideration (X, Ka, UHF, Optical)

Small Telecom Orbiter – Preliminary Configuration

Host Spacecraft

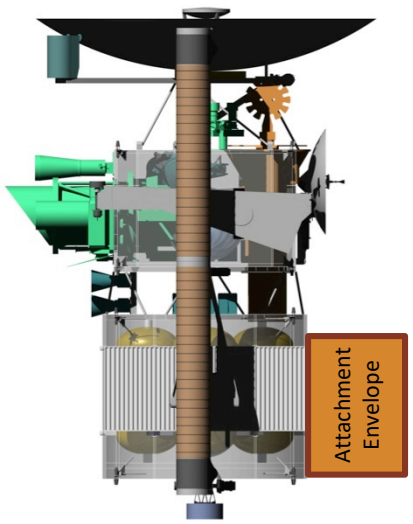

Undeployed

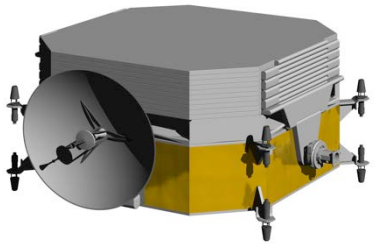

Mass Estimate with 30% margin

MEL, kg		194
Dry Bus	140	
Telecom Payload	49	
Propellant	5.4	
ΔV, m/s		64
Main	0	
RCS	64	
Power		
Bus Power Budget, kW	0.46	
Battery Capacity, Ahr	24	
Solar Array, kW@ 1AU	1.2	

Fully Deployed

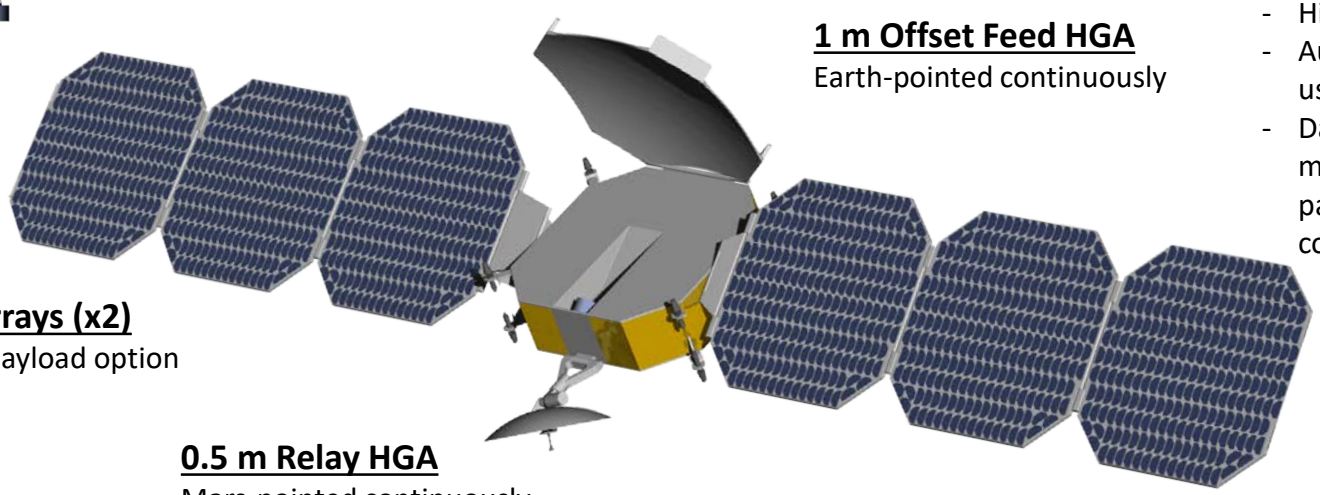

1 m Offset Feed HGA
Earth-pointed continuously

0.8 kW Solar Arrays (x2)
Varies slightly by payload option

0.5 m Relay HGA
Mars-pointed continuously unless targeted to user

C&DH
- High Speed Processor
- Autonomous ACS and user tracking
- Data storage for multiple missed passes and user contact delays

ACS and Propulsion
- Reaction wheels
- Hydrazine propulsion
- 100 m/s

Pre-decisional. For planning and discussion only.

Baseline Telecom Payload

Baseline Payload

- Ka-band high-rate to Earth
  - 100W Ka-band TWTA
  - 1m X/Ka body-fixed HGA
- X-band to/from Earth
  - 20W X-band TWTA
  - 1m HGA plus LGAs

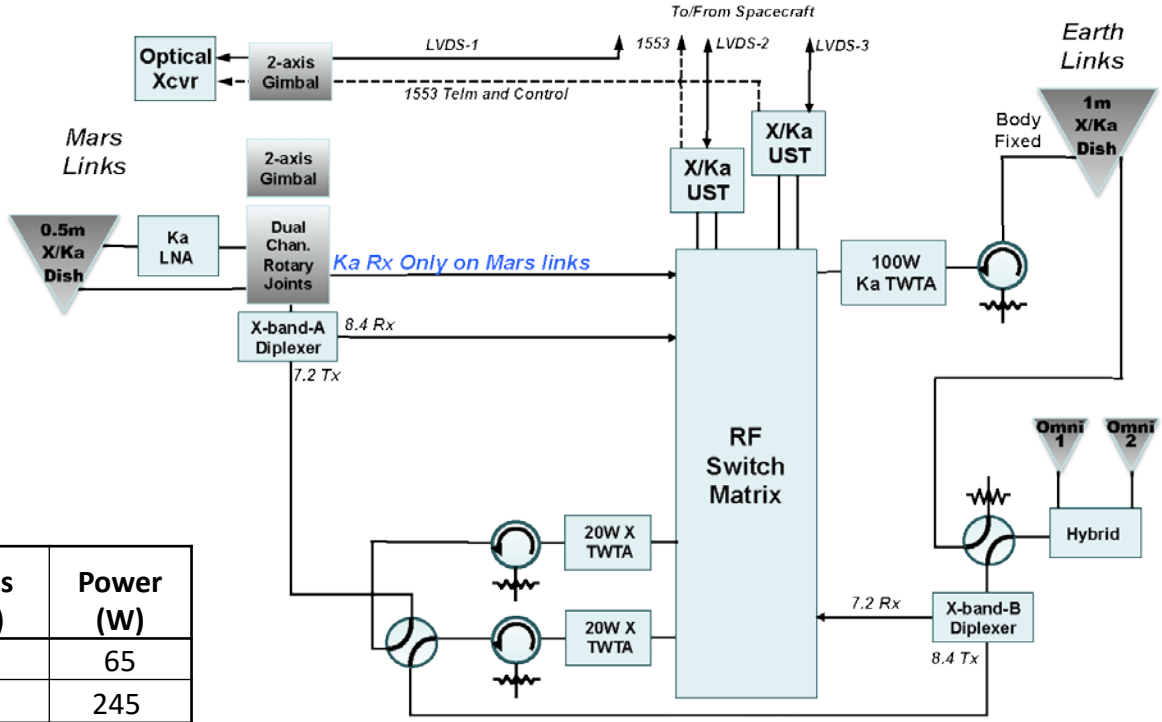

Mars AreoStationary Relay Orbiter Telecom Hardware Deliverables	Mass (kg)	Power (W)
Transponders	11	65
Amplifiers	8	245
Antennas	5	-
Gimbals and Cntrl Electronics	5	10
Switches, Waveguides, and Misc	14	-
Total RF Telecom	**43**	**320**
Total Optical Telecom	**6**	**43**
Total RF & Optical Telecom Payload	**49**	**363**

- X-band Proximity Relay
  - 2-axis gimbal
  - 0.5m X/Ka HGA
- Optical Proximity Relay
  - 2-axis gimbal
  - 5 cm telescope

RF DTE Link Capability

- EIRP constrained due to volume and power limitations
  - 1 m HGA
  - 100 W Ka-band TWTA
  - 20 W X-band TWTA
- High-rate Ka-band channel for user relay return data
  - 0.2 – 3 Mb/s
- Lower-rate X-band channel
  - Orbiter TT&C
  - Time-critical user relay data (avoiding Ka-band weather outages)
  - 10 – 140 kb/s

This dedicated DTE stream provides higher daily data volume than MRO or Odyssey for individual relay users

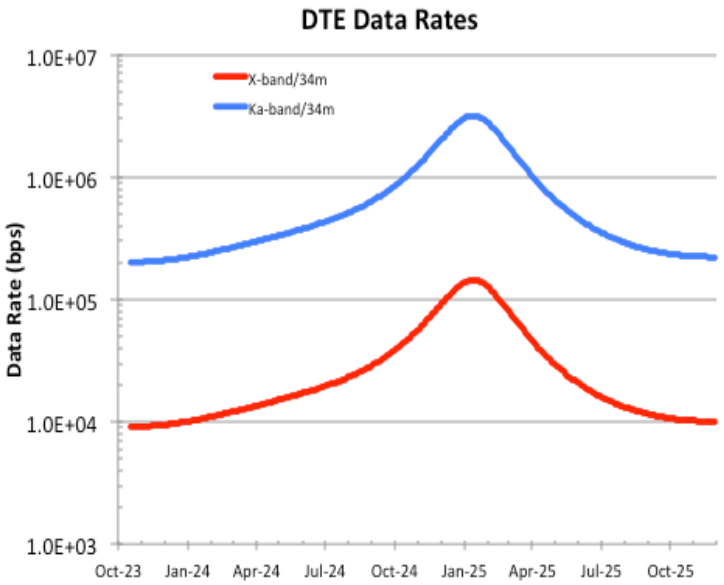

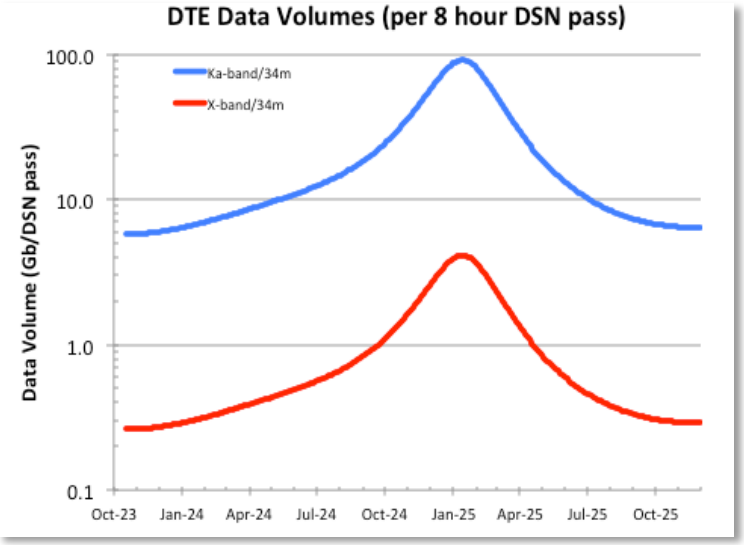

Pre-decisional. For planning and discussion only.

Small Orbiter RF Proximity Link Capability

- High-performance directional proximity link
  - 0.5 m steered X/Ka HGA
  - Optional 10 dB UHF helix for legacy low-rate support
- Proximity link performance scales with user EIRP
  - MER/MSL-class X-band system (30 cm/15 W) provides ~1 Mb/s prox link capability
  - Ka-band offers path to higher rates and/or lower user antenna size and transmit power
  - User w/ MSL-class Electra-Lite UHF system can achieve 7 kbps rate
    - No user pointing required
    - Wide orbiter antenna beamwidth allows monitoring entire Mars disk and low Mars orbit continuously

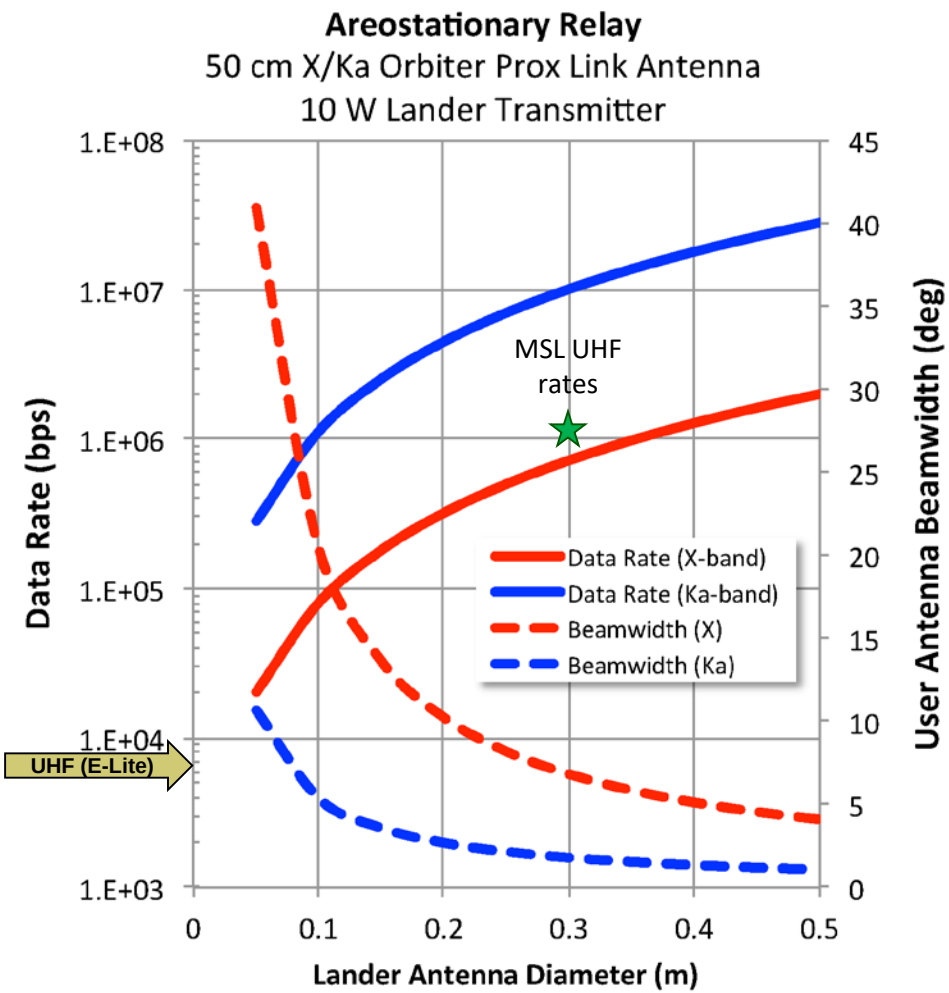

Pre-decisional. For planning and discussion only.

Co-Manifest Launch Telecom Orbiter Introduction

- Mission Overview
  - Full redundancy
  - Co-manifest with a GeoSat, and released at GTO
  - Flies to Mars orbit using solar electric propulsion (SEP) in 2 years
  - Spirals to areostationary orbit (ASO) and can shift longitudes easily
  - Areostationary orbit used as proxy for all orbit assumptions above 2000 km
  - All communication types available for consideration (X, Ka, UHF, Optical)

Co-Manifest Telecom Orbiter Spacecraft Configuration

Stowed Configuration on Launch Vehicle

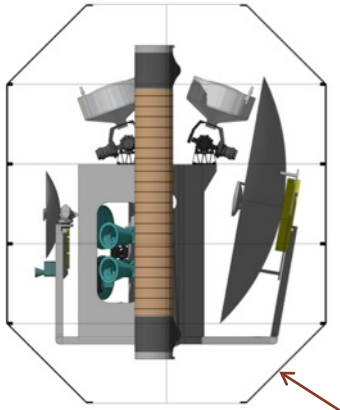

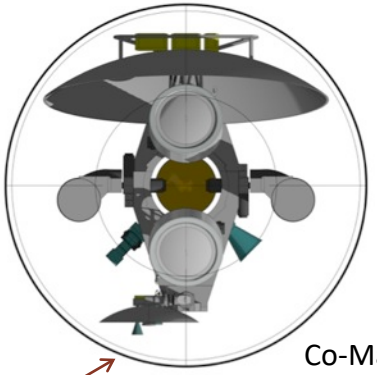

Shown with dual-spacecraft adaptor

Co-Manifest on Atlas V-401 or Falcon-9
Launch Mass to GTO ~4500 kg

System Mass, kg	**2180**
Dry Bus	**847**
Payload	**148**
Propellant	**432**
Dual S/C Adapter	**900**
Power	
Bus Power Budget, kW	0.87
Battery Capacity, Ahr	44
Solar Array, kW@ BOL	12
ΔV, ms/s	**11940**
Main	11858
RCS	82

Fully Deployed at Mars

6 kW Solar Arrays (x2)

2m, 200W Ka-band DTE
Earth-pointed continuously

C&DH
- High-speed processor
- Autonomous ACS and user tracking
- Data storage for multiple missed passes and user contact delays

ACS and Propulsion
- Reaction wheels
- Hydrazine RCS
- Xenon SEP, 3 XIPS thrusters

Ka/X band Relay
Mars-pointed continuously

Pre-decisional. For planning and discussion only.

Co-Manifest Launch Telecom Orbiter Trajectories

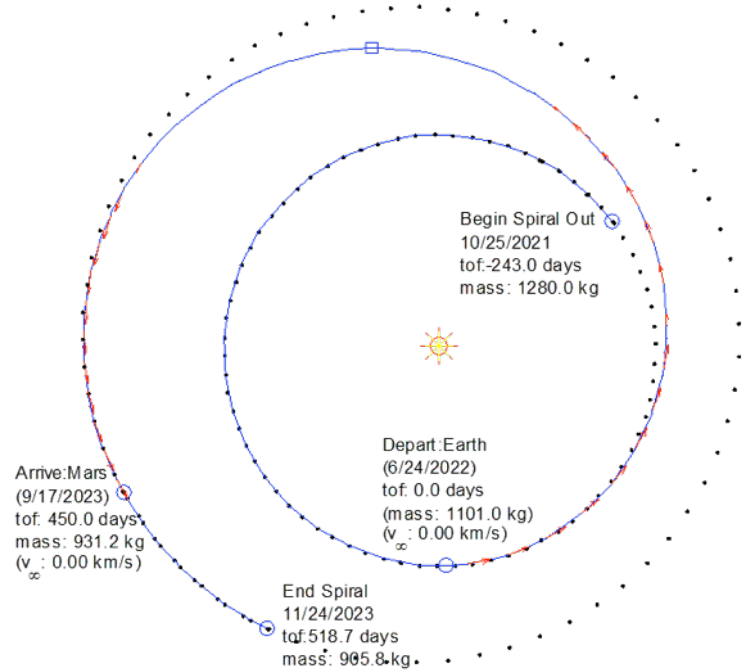

- Can launch on any GTO over a long launch period (9-12 months)
  - Mass constrained to ½ Falcon-9 for S/C and dual spacecraft adaptor
- Spiral to escape Earth (8 months)
- Heliocentric trip to Mars (14 months)
- Spiral to areostationary orbit (3 months)
- Total SEP ΔV, 12 km/s
- Can increase durations to reduce mass

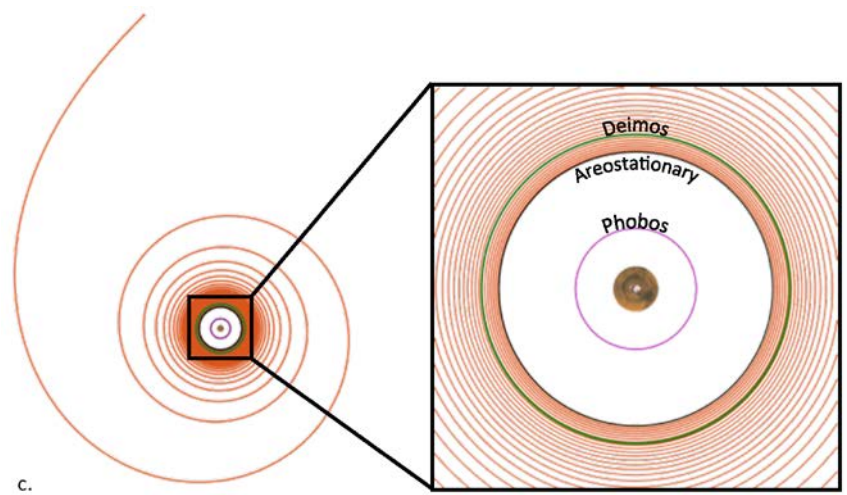

Pre-decisional. For planning and discussion only.

Co-Manifest Launch Telecom Orbiter
Preliminary Block Diagram and Mass Estimate

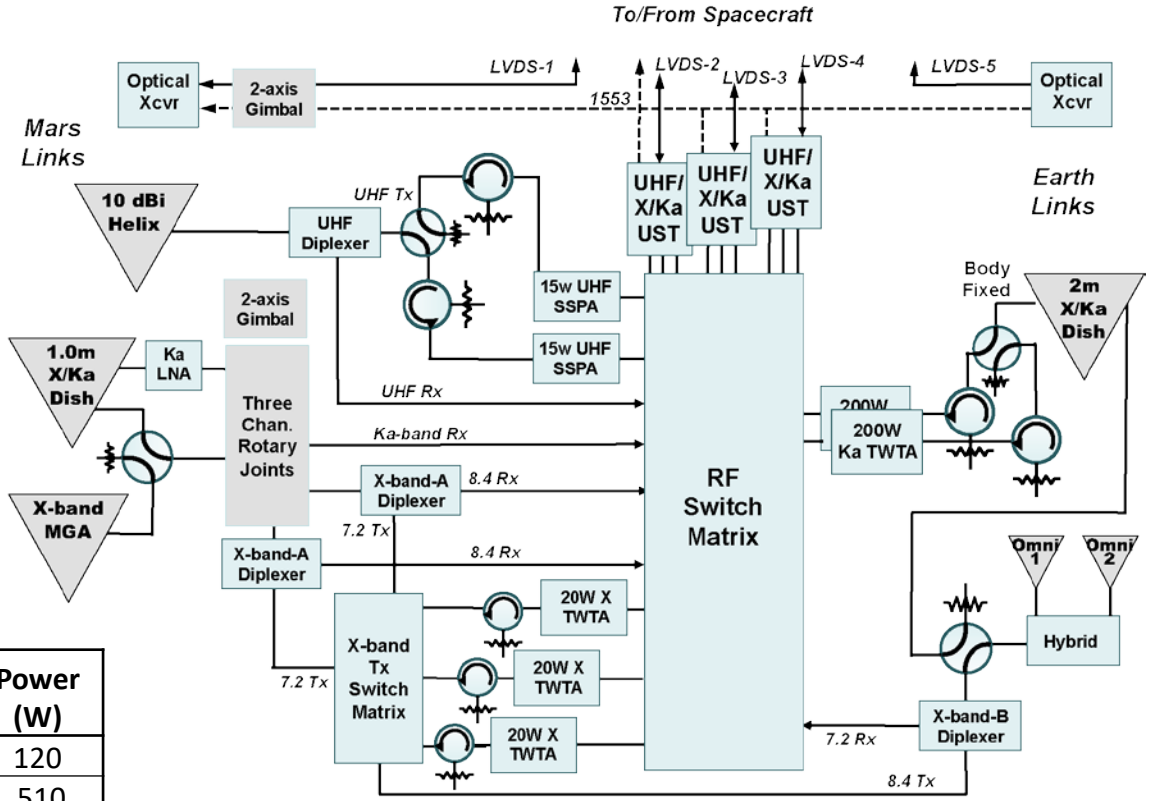

Mars AreoStationary Relay Orbiter Telecom Hardware Deliverables	Mass (kg)	Power (W)
Transponders	20.6	120
Amplifiers	8.6	510
Antennas	21.5	-
Gimbals and Cntrl Electronics	11.7	10
Switches, Waveguides, and Misc.	25.0	-
Total RF Telecom	**87**	**645**
Total Optical Telecom	**53**	**132**
Total RF and Optical Telecom Payload	**141**	**777**

Pre-decisional. For planning and discussion only.

RF and Optical DTE Link Capability

- EIRP constrained due to volume, power limitations
  - 2 m HGA
  - 200 W Ka-band TWTA
  - 20 W X-band TWTA
- High-rate Ka-band channel for user relay return data
  - 1 – 20 Mb/s
- Lower-rate X-band channel
  - Orbiter TT&C
  - Time-critical user relay data (avoiding Ka-band weather outages)
  - 35 – 500 kb/s

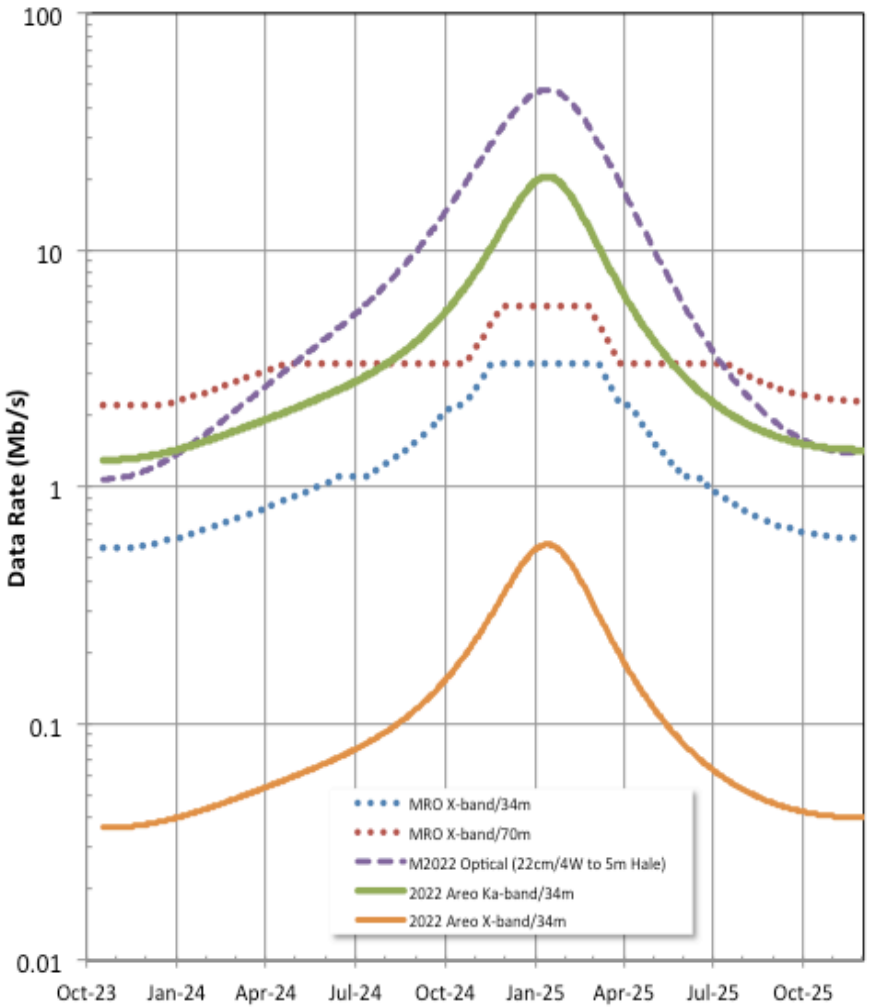

Pre-decisional. For planning and discussion only.

RF Proximity Link Capability

- High-performance directional proximity link
  - 1 m steered X/Ka HGA
  - Optional 10 dB UHF helix for legacy low-rate support
- Prox link performance scales with user EIRP
  - Significantly better rates than current rovers enjoy and with constant access
  - Ka-band offers path to higher rates and/or lower user antenna size and transmit power
    - User pointing requirement increases with lander antenna gain
  - Monitors entire Mars disk and low Mars orbit continuously

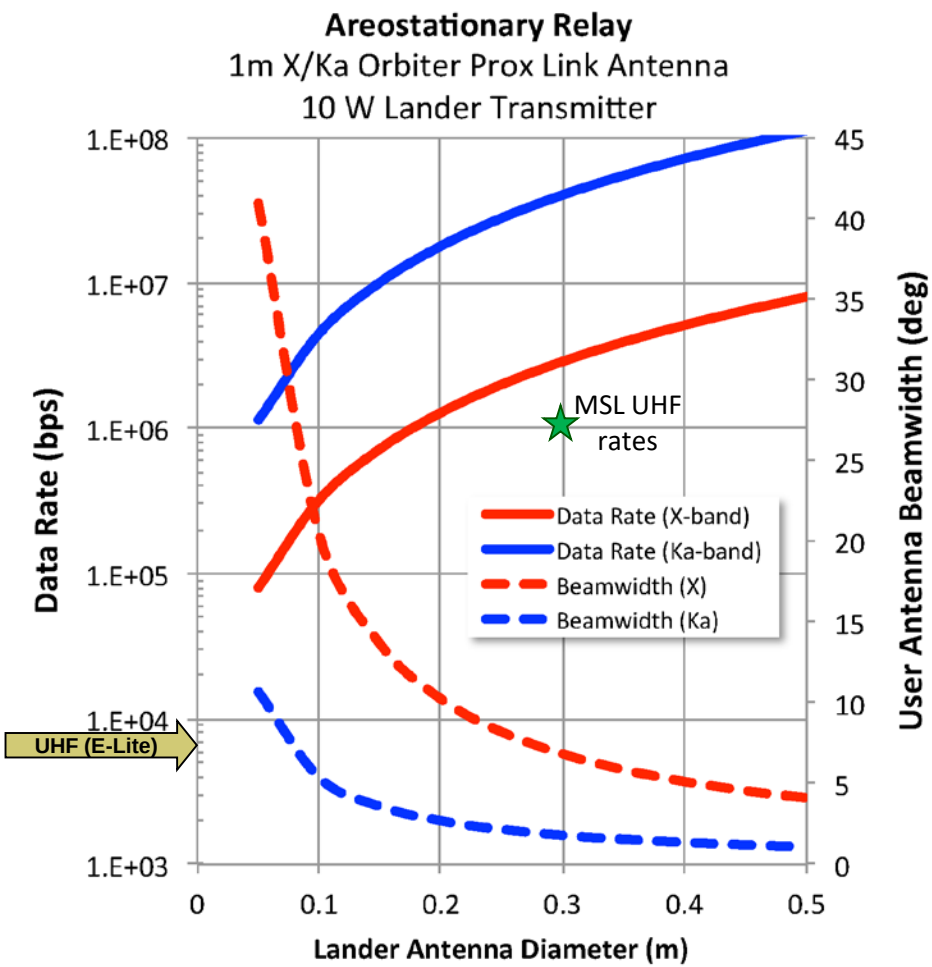

Pre-decisional. For planning and discussion only.

Summary Conclusions

- In support of future Mars Relay Network architectures for human exploration, several initial orbiter options were studied at different cost points
- All options have significant benefits to demonstrating capabilities and proving operations methods
  - Drop-off of a small telecom orbiter from a SEP-driven science orbiter
    - Can provide higher relay data rates and longer access times than from current low Mars orbit missions, Mass ~200 kg
    - Demonstrates full range of future services and most link types (Ka, X-band, optical relay)
  - A co-manifested telecom orbiter launched to GTO could demonstrate <u>all</u> future network architecture capabilities
    - Reduced launch cost, fully redundant and long-life design
    - Extremely high performance support to robotic precursor missions
    - Extendable to Human Era performance levels