Environmental Testing of Flight Hardware in the 25 ft. Space Simulator at JPL in a Manual Mode

Author: Anton Ovcharenko

Jet Propulsion Laboratory, California Institute of Technology
4800 Oak Grove Drive
Pasadena CA 91109

ABSTRACT

After receiving global admiration for the Mars Science Laboratory (MSL) Curiosity rover, the Jet Propulsion Laboratory (JPL) is planning to embark upon another mobile mission to the red planet in the year 2020. Currently, the working name given to this sophisticated next-generation rover is Mars 2020. Mars 2020 will boast a multitude of newly developed instruments to aid in the scientific study of Mars.

This paper will describe the process of testing one of the Mars 2020 instruments in the 25 ft. Space Simulator. The testing was performed at Mars CO2 atmospheric pressure of 7 Torr and consisted of multiple chamber evacuations and backfills. The Programmable Logic Control (PLC) system for the chamber was in the middle of a major overhaul that resulted in utilizing the manual Hand/Off/Auto switches to operate the chamber. Accomplishing this challenging task required the meticulous development of new operating procedures and thorough training of the chamber's operators.

25 ft. Space Simulator Historical Preface

Nearly 60 years ago, JPL's principal focus began to shift from a laboratory that produced missiles to one that developed lunar and planetary spacecraft. During the early stages of JPL's transition to focusing on planetary science, many at JPL began to recognize the necessity of developing a sizeable testing facility capable of producing various interplanetary environments (Harrell, 1988). Although JPL already had several smaller variations of thermal vacuum chambers capable of simulating the precarious parameters of space, consisting of low pressures, extreme subzero temperatures, and intense solar radiation, none of JPL's current thermal vacuum chambers were large enough to accommodate the growing size of JPL's spacecraft. This necessity brought about the 25 ft. Space Simulator.

@ 2016 California Institute of Technology. Government sponsorship acknowledged.

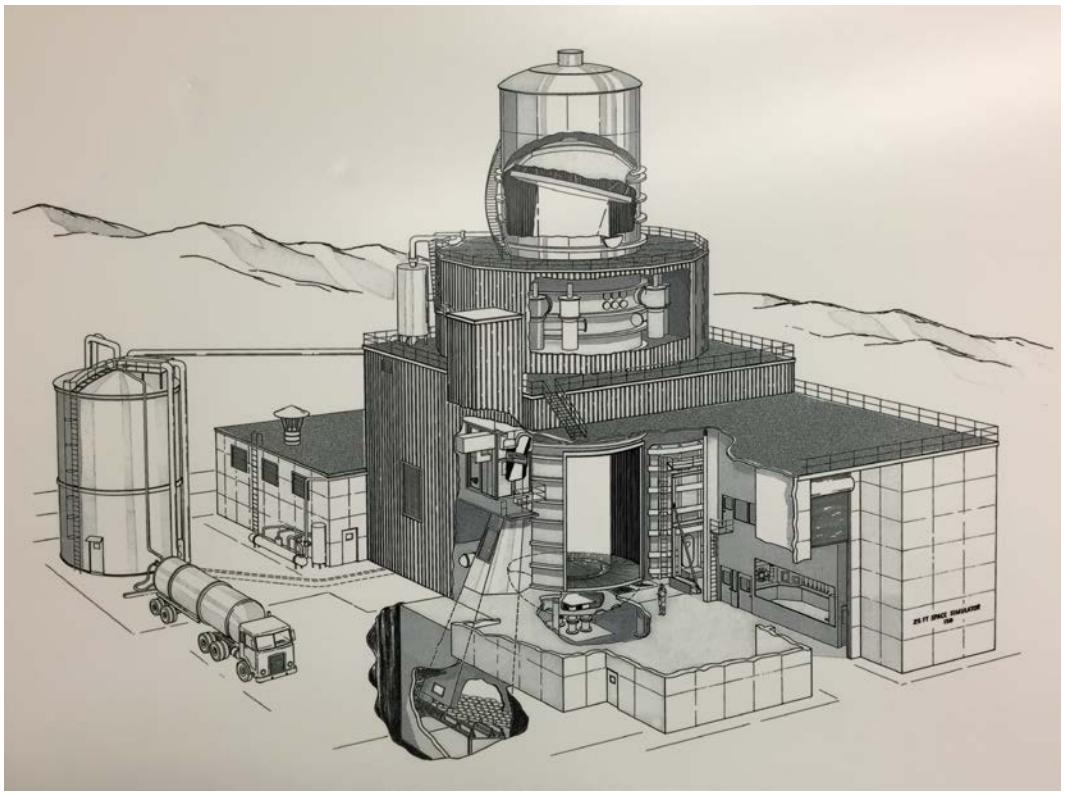

Figure 1. Artist rendering of 25ft Space Simulator circa 1967

Construction of the large thermal-vacuum testing facility with solar simulation capabilities began in 1961, with the main objective of providing JPL with a testing facility capable of accommodating full-scale spacecraft. It is worth mentioning that during this period, very little useful information actually existed regarding the effects that long-term exposure to extraterrestrial environments had on spacecraft, which only helped reassure JPL's need for a sizeable testing facility to perform the necessary testing functions (Harrell, 1988). These testing functions consisted of spacecraft systems verifications tests, heat balance/ thermal distribution tests and various large-scale research and developmental tests.

Consolidated Vacuum Corporation won the contract and supervised the construction the 25 ft. Space Simulator, while the majority of the mechanical work was outsourced to Pittsburg Des Moines Steel, Inc. The original solar simulation system was developed and built by Bausch and Lomb, Inc. but proved to be inadequate from the get-go and thus was scrapped in 1966 for a JPL-designed off-axis solar simulator capable of reproducing solar intensity levels at Mercury (Harrell, 1988).

The 25 ft. Space Simulator is built as a right circular cylinder, 27 feet (8.2 m) in diameter and a height of 85 feet (25.9 m). Spacecraft egress and regress into the 25 ft. Space Simulator is achieved via a 16-ton (14,500 kg), 15-foot (4.57 m) wide by 25-foot (7.62 m) high hydraulically actuated side-access door. The 25 ft. Space Simulator's internal volume (nearly 50,000 cubic feet/ 1,416 cubic meters) regularly achieves 5 x 10^{-6} Torr or better in a record 90 minutes.

@ 2016 California Institute of Technology. Government sponsorship acknowledged.

This high-speed performance is achieved by utilizing a behemoth 500-horse power Ingersoll-Rand two-stage axial compressor with a combined max pumping speed of 16,000 cubic feet (453 cubic m) per minute. The axial compressor reduces the 25 ft. Space Simulator's internal pressure from ambient (730 Torr) to about 70 Torr in less than 15 minutes. Upon reaching 150 Torr, the pumping work is then transferred to four pairs of Stokes 4-2H mechanical vacuum pumps along with their roots type blowers. In addition, the mechanical pumping plant is equipped with two colossal Stokes roots blowers (model 900-170-13) that provide additional pumping capacity. This arrangement of pumps further decreases the chambers pressure to less than 10 milliTorr, after which the 25 ft. Space Simulators pressure is further decreased by utilizing ten 42-inch (107 cm) diameter CVI Cryopumps, which are rated with a pumping capacity of 50,000 Torr liters per second to achieve a high-vacuum/ low pressure environment equivalent to the pressure found in deep space (1×10^{-7} Torr).

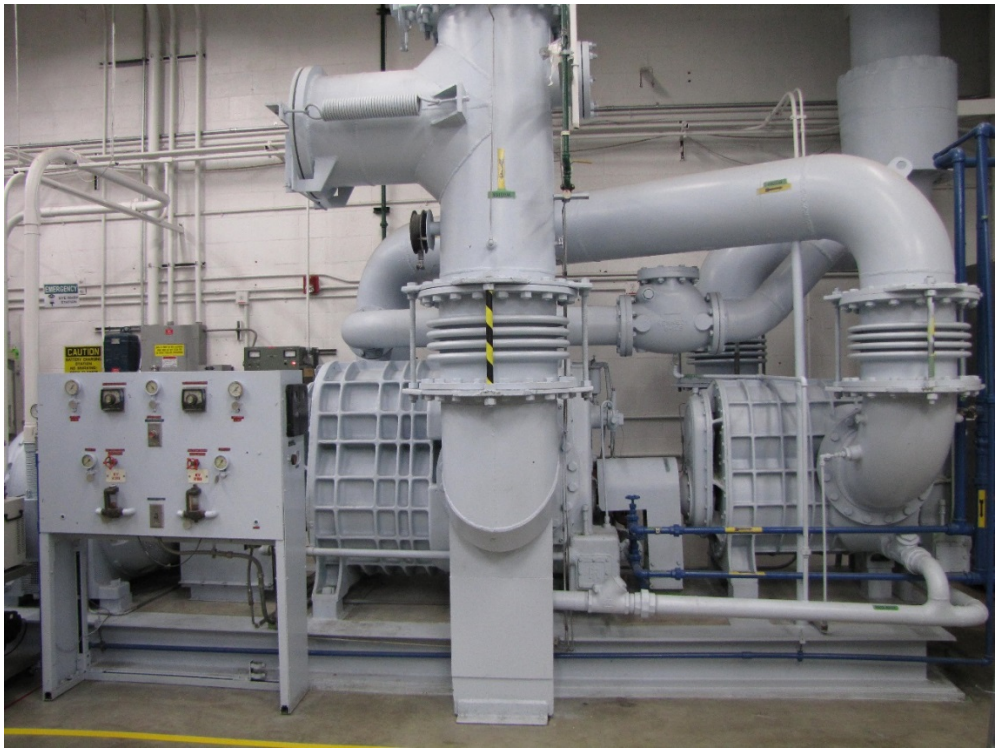

Figure 2. Ingersoll-Rand Two Stage Axial Compressor.

@ 2016 California Institute of Technology. Government sponsorship acknowledged.

Figure 3. 25 ft. Space Simulator's Mechanical Pumping Plant in Building 150 Room 102.

The 25 ft. Space Simulator's interior walls are lined with pre-formed aluminum panels that are finished with a Cadillac Flat Black painted surface designed to absorb reflected and emitted energy from the spacecraft. The chambers thermal system is comprised of a wall shroud system, a separately controlled aluminum floor shroud system, and an aluminum mirror utilized during solar simulation applications. Solar simulation is achieved by concentrating 37 xenon arc lamps, located in the third basement, through an aligning lens that bounces the collimated spectrum of light off the 23-foot (7-m) mirror and onto the spacecraft. The chamber shroud system is cooled to -190 degrees Celsius cryogenically using liquid nitrogen (LN2), and can reach temperatures of +100 Celsius utilizing a gaseous nitrogen recirculating system with inline heating elements. LN2 is delivered into the facility via a vacuum-jacketed storage tank located north of the facility, supplying the 25 ft. Space Simulator with 50,000 gallons of LN2. Depending on the test parameter, the LN2 consumption rate is anywhere between one to over two thousand gallons per hour.

Over the decades, the 25 ft. Space Simulator has undergone several renditions of improvements to maintain its adaptability to ever-changing Flight Project Protocols, performance requirements, and reliability needs. The most note worthy improvements were the 1966/67 off-axis solar simulator redesign, the 1994 updating of the 25 ft. Space Simulator's control system to a GE Fanuc Programmable Logic Control (PLC) control system, the 1994 conversion from diffusion pumps to cryopumps, the 2010 50,000 gallon LN2 tank upgrade, and the 2016 PLC control system modernization. The 25 ft. Space Simulator played a major role in nearly every JPL in-house mission and was designated a national historic monument in 1988.

@ 2016 California Institute of Technology. Government sponsorship acknowledged.

Figure 4. 25 ft. Space Simulator Door Closed

M2020

@ 2016 California Institute of Technology. Government sponsorship acknowledged.

JPL is planning to embark upon another mission to the red planet in the year 2020. Currently, the working name given to this sophisticated next generation rover is Mars 2020. This rover will boast a multitude of newly developed instruments to aid in the scientific study of Mars; one of the instruments was tested at JPL's 25 ft. Space Simulator in Pasadena, CA.

The director of JPL commissioned a group of engineers to investigate the feasibility of adding an additional instrument to Mars 2020 that would expand the rover's capabilities. This particular instrument's development required a series of tests to be conducted in a large vacuum chamber at Mars carbon dioxide (CO2) pressures of 7 Torr to tune its high-speed proportional, integral, and derivative (PID) control parameters. The research and development phase of this instrument would also have to be conducted in a relatively timely manner due to the Mars 2020 instrument selection deadline.

The Problem

Under normal circumstances, the 25 ft. Space Simulator would have been the ideal facility to conduct these series of tests. However, the timing could not have been worse, as the entire circa-1994 GE Fanuc PLC control system used to operate the 25 ft. Space Simulator was in the middle of a much needed, large-scale upgrade in an effort to modernize the chamber's control system. The 1994 PLC control system had become severely outdated, with the manufacturer no longer supporting the 20-year-old electronic equipment. As a consequence the reliability of the space simulator suffered and in 2016 approval was finally secured to refurbish the PLC control system. In the midst of this PLC refurbishment, the group of engineers expressed their desire to utilize the 25 ft. Space Simulator to aid in the research and development of their instrument.

The Solution

The Environmental Testing Laboratory (ETL) at JPL has set a precedent of equipping all of its newly refurbished vacuum chamber control systems with redundant Hand/ Off/ Auto (HOA) switches. Historically, all small vacuum chambers at ETL where controlled via simple toggle switches with relay interlocks. In the late 1990s, as personal computers became more prevalent, outside industry began replacing chamber control hand switches with modern computer-controlled human machine interfaces (HMI) as a means of controlling vacuum chambers. The obvious solution for ETL to keep up with industry standards was to follow suit.

This scenario created a significant difference of opinion between ETL members, as certain key individuals were remarkably apprehensive to the notion that a mouse and keyboard would be their only means of chamber control. In an effort to move past the stalemate, a compromise was drafted that established the practice of equipping all future ETL vacuum chamber computer HMI controls with redundant HOA switches. The primary HMI would be the mouse and keyboard, while in an event of a catastrophic failure of the primary control computer, an operator could safeguard the flight hardware

@ 2016 California Institute of Technology. Government sponsorship acknowledged.

by repossessing control and bypassing the computer via the newly establish HOA switches.

Figure 5. 25 ft. Space Simulator electrical cabinet and Hand/ Auto Control Switches

Not only were these HOA switches extremely useful in dire chamber operation scenarios, but they also worked exceptionally well during maintenance applications. Technicians performing maintenance or troubleshooting activates were no longer required to have a computer programmer defeat the interlock schedule every time they needed to cycle chamber equipment. Having HOA switches that bypassed all interlocks presented greater flexibility for ETL's experienced staff and promoted efficiency in daily maintenance tasks. The associated benefits of equipping vacuum chamber control systems with redundant HOA switches made it a highly desired addition to the newly refurbished 25 ft. Space Simulator PLC control system.

Pandora's Box

Coincidently, the project made an inquiry to our management team after our team had successfully completed an end-to-end functional loop checkout of our HOA switches. The utilization of the facilities HOA switches as a method of chamber control was never our team's initial intention. The sole purpose of equipping the 25 ft. Space Simulator with redundant HOA switches was to aid and simplify trouble shooting and maintenance operations. Only in a worst-case scenario would they provide our experienced operators a means of chamber control to manually bring the 25 ft. Space Simulator back to safe

@ 2016 California Institute of Technology. Government sponsorship acknowledged.

parameters in the event the computerized HMI became jeopardized, thereby safeguarding JPL flight hardware.

The instrument team was informed concerning the current nonoperational state of our facility due to the PLC refurbishment effort, suggesting they would need to wait for the comprehensive refurbishment effort to conclude. However, due to the rapidly approaching deadline for Mars 2020 instrument selection, the project was in dire need to perform these series of test to develop their design.

The tests were of a simplistic nature, requiring only a partial CO2 atmosphere of 7 Torr to replicate the atmospheric pressures of Mars. ETL's leadership made an inquiry of our technical staff regarding the practicability of performing these series of tests using the HOA switches for controlling the vacuum portion of the 25 ft. Space Simulator. The operators contemplated the pros and cons of running the rough vacuum portion of the facility and decided to explore this notion in greater detail.

The Challenges

Under normal operating conditions, the pump-down process required only one operator but from the onset the team quickly realized that this process would require additional support personnel. The team was fortunate to not have to start from a blank canvas, as the standard operating procedure for the chamber's vacuum operations provided the essential sequence for the pump down process. The team began by making a visual representation of where individuals were required during the chamber evacuation sequence to determine the needed number of field operators to manually operate the vacuum system.

Throughout the 25 ft. Space Simulator facility, local PLC inputs and outputs are distributed irregularly throughout the facility in electrical cabinets. These electrical cabinets house the facility's HOA switches, which provide local control of field equipment that bypasses the PLC and all associated interlocks. To accommodate the chamber's manual mode of operation, constant uninterrupted communication between all members of the team was vital for the smooth progression of the pump-down sequence. Field operators were equipped with two-way Motorola walkie-talkies to accommodate their communication needs.

@ 2016 California Institute of Technology. Government sponsorship acknowledged.

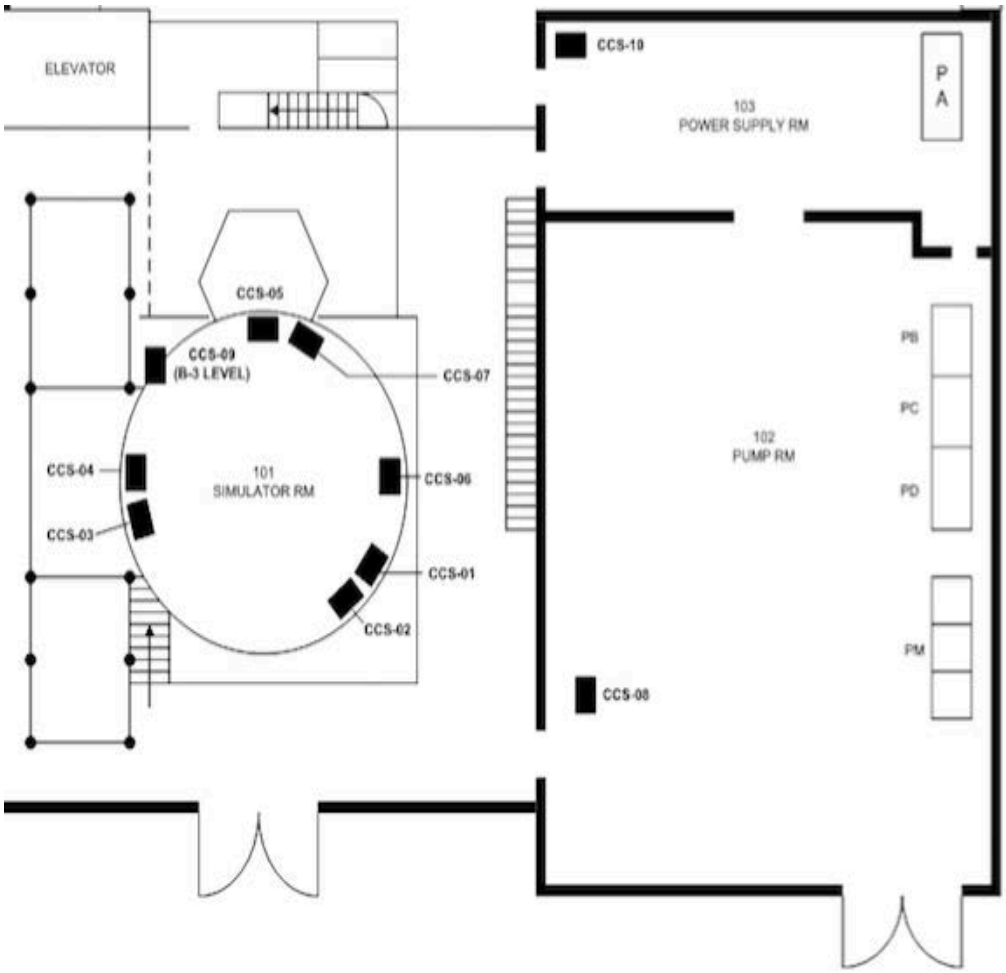

Figure 6. CCS locations throughout 25 ft. Space Simulator facility.

Several dry runs were performed that consisted of walking through the working copy of the new manual pump down procedure in an effort to finalize the sequence of events. These dry runs revealed that the minimum personnel requirement entailed two field operators and a crew chief monitoring vacuum pressure displays from within the control console. During these dry runs, field operators noted locations that required visual pressure displays to assist in their actuating of field equipment and had analog pressure gauges installed as needed throughout the facility. At this time, field operators recognized the importance of being able to conceptualize the entire mechanical pumping plant during the pump down operations sequence. The team met this need by posting an illustrated diagram of the entire mechanical pumping plant system adjacent to the HOA switches inside each of the electrical cabinets.

The standard operating procedures for evacuating the 25 ft. Space Simulator consists of 55 steps and incorporates an overlapping process of the mechanical vacuum pumps. The first draft of the manual mode pump down procedure attempted to incorporate the same method. The first mechanical pump brought online is the axial compressor pump that evacuates the chamber from ambient (730 Torr) to about 70 Torr in 15 minutes. The axial compressor is extremely effective but generates a high volume

@ 2016 California Institute of Technology. Government sponsorship acknowledged.

of noise that under normal operating conditions has no effect on the pump down process. At approximately 150 Torr, four sets of twin 412H Stokes pumps are brought online in preparation for the mechanical vacuum pump transition as the axial compressor pump reaches its lower pressure limit. This overlapping sequence creates a smooth seamless pump down.

The overlapping pump down technique is the optimal method to use when controlling the process remotely. However, as our team discovered first hand during our first switch actuating dry run, it was nearly impossible to hear anything over the rumble of the axial compressor. To further complicate the process, not all of the associated equipment was in the same electrical cabinet. By circumstance, the Stokes 412 vacuum pumps are controlled via the HOA switches in electrical cabinet CCS-8, located in room 103, while the HOA switches located in electrical cabinet CCS-10 controlled the associated vacuum valves located in room 102. The manual pump down process not only required that the crew chief dictate the process, but also required that the two field operators be in sync with their operations, all of which required uninterrupted audible communication.

Too much was happening far too quickly and the noise interference from the axial compressor made our team uncomfortable with the overlapping pump down sequence. After the first hands-on dry run, the team expressed their desire to discontinue using the axial compressor due to the complications it presented for sustaining audible communication during the pump down. Nevertheless, after mulling over the large number of runs that compromised the research and development phase of the instrument, the team concluded that it would be necessary to utilize the axial compressor pump to meet the comprehensive and ambitious testing schedule.

The team determined that by eliminating the overlapping pump down process, field operators would be able to focus their undivided attention to one step/one function at a time. This process greatly simplified the pump down procedure, which subsequently reduced the possibility of operator-induced error. As for the high-noise impediment, field operators were equipped with radio headsets designed to function in high-noise applications, identical to the ones used by many pit crews during a race weekend. Following several other renditions of dry run rehearsals the team finalized the manual pump down procedure with the final version consisting of 81 steps.

To partially backfill the chamber, the team assembled a remarkably unsophisticated manual backfilling system. It consisted of a vacuum-isolation hand valve, a top-hat pressure relief devise, a needle valve, and a pressure regulator that stemmed from a CO2 k-bottle six-pack. A field operator would begin by ensuring that the pressure regulator was completely backed-off, upon which they opened each individual k-bottle to the main six-pack manifold. After opening each individual k-bottle, the operator continued by opening the main six-pack manifold valve, after which the operator adjusted the pressure regulator setting to control at 30 pisg. The operator would then open the vacuum isolation valve and finally the needle valve to begin the CO2 backfill process.

@ 2016 California Institute of Technology. Government sponsorship acknowledged.

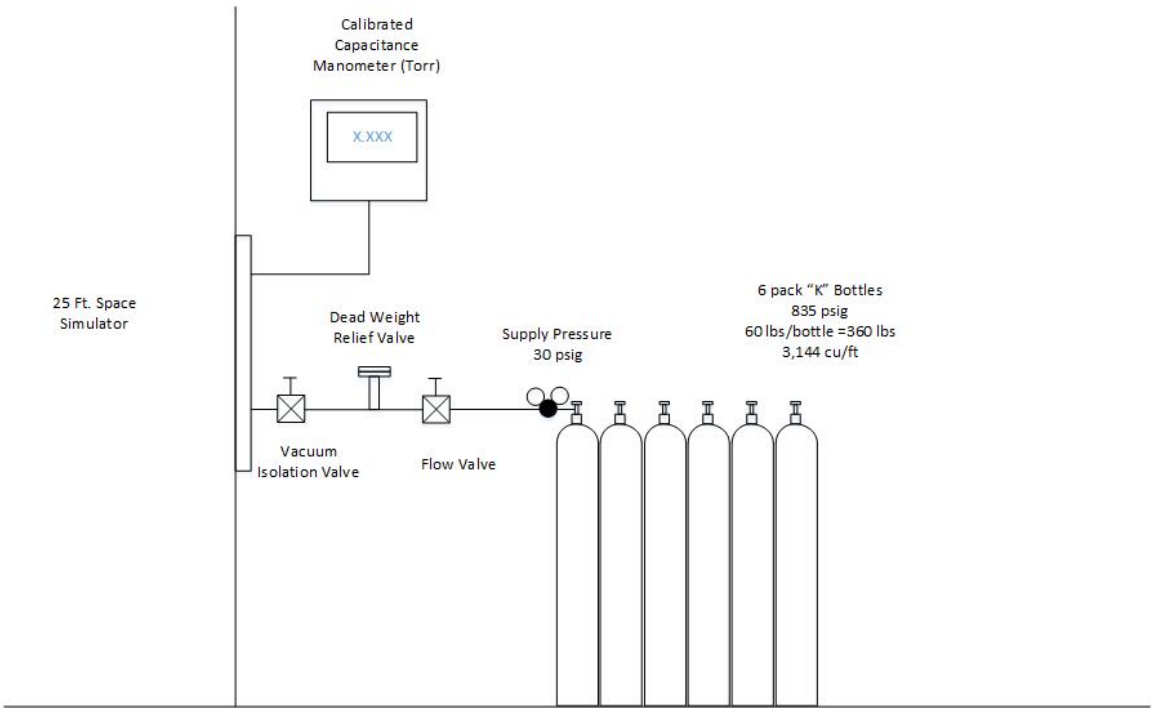

Figure 7. CO2 Backfill System.

Test Parameters

A typical run in this series of tests consisted of evacuating the chamber to 500 milliTorr and then closing the chambers main roughing valve. The team would then partially backfill the chamber with CO2 to 5 Torr in an effort to remove lingering water vapor. Upon reaching 5 Torr, the team would re-open the main rough valve and proceeded with another pump down to 500 milliTorr. The final step in this process required a second CO2 backfill to 7 Torr, with the customer providing the extract pressure necessary for that particular run. Pressure was read off a digital Baratron vacuum sensor to determine the chamber's internal CO2 pressure. This concluded the chamber operations portion of the test and created the desired test pressure parameters. The entire chamber operations process took about three hours to perform.

Conclusion

These series of tests were conducted on schedule before Mars 2020's instruments selection deadline, ensuring the instrument would be a strong candidate to be integrated with JPL's next-generation Mars rover. Our team performed a total of 38 successful runs employing the manual mode of operation by utilizing the HOA switches and consumed four standard sized six-packs of CO2 during the partial backfill process. Our team effectively met the project's criteria by providing the instrument's team with a Mars CO2 atmospheric pressure of 7 Torr in a large vacuum chamber, which proved absolutely essential for the instrument to progress through the research and development phase and advance on to the next phase of the project. Performing a test within a narrow time frame and limited 25 ft. Space Simulator operations was only possible due to the creativity and

@ 2016 California Institute of Technology. Government sponsorship acknowledged.

diligence of our team members. Our team proved that even with limited operational capabilities, a large vacuum chamber is critical for JPL mission success.

Acknowledgments
The following individuals contributed to the success of this test:

Andy Rose
JPL – Environmental Testing Laboratory Technical Group Supervisor

Patrick Martin
JPL – Senior Environmental Test Engineer

Keith Fields
JPL – Systems Integration and Test Engineer

Bradley Kinter
JPL – 25 ft. Space Simulator Facility Engineer

Paul Van Velzer
JPL – Lead Environmental Test Technician

Sanford Bush
JPL – Environmental Test Technician

Anton Ovcharenko
JPL – Environmental Test Technician

Michael Sachse
JPL – Environmental Test Technician

Simeon Young
JPL – Environmental Test Technician

Richard Ebner
JPL – Environmental Test Technician

Vannaras Kun
JPL – Environmental Test Technician

References

Harrell, W. J. (1988). A Brief History of the Large Space Simulator at the Jet Propulsion Laboratory. *Jet Propulsion Publication*

@ 2016 California Institute of Technology. Government sponsorship acknowledged.

The research described in this paper was carried out by the Jet Propulsion Laboratory, California Institute of Technology, under a contract with the National Aeronautics and Space Administration.

Any reference herein to any specific commercial product, process, or service by trade name, trademark, manufacturer, or otherwise, does not constitute or imply its endorsement by the United States Government, or the Jet Propulsion Laboratory, California Institute of Technology.

@ 2016 California Institute of Technology. Government sponsorship acknowledged.