Proximity Link Design and Performance Options for a Mars Areostationary Relay Satellite

Charles D. Edwards, Jr., David J. Bell, Abhijit Biswas, Kar-Ming Cheung, Robert E. Lock
Jet Propulsion Laboratory, California Institute of Technology
4800 Oak Grove Dr
Pasadena, CA 91109
818-354-4408
Charles.D.Edwards@jpl.nasa.gov

Abstract—**Current and near-term Mars relay telecommunications services are provided by a set of NASA and ESA Mars science orbiters equipped with UHF relay communication payloads employing operationally simple low-gain antennas. These have been extremely successful in supporting a series of landed Mars mission, greatly increasing data return relative to direct-to-Earth lander links. Yet their relay services are fundamentally constrained by the short contact times available from the selected science orbits. Future Mars areostationary orbiters, flying in circular, equatorial, 1-sol orbits, offer the potential for continuous coverage of Mars landers and rovers, radically changing the relay support paradigm. Achieving high rates on the longer slant ranges to areostationary altitude will require steered, high-gain links. Both RF and optical options exist for achieving data rates in excess of 100 Mb/s. Several point designs offer a measure of potential user burden, in terms of mass, volume, power, and pointing requirements for user relay payloads, as a function of desired proximity link performance.**

TABLE OF CONTENTS

1. INTRODUCTION 1
2. CURRENT MARS RELAY NETWORK ARCHITECTURE 1
3. RELAY FROM MARS AREOSTATIONARY ORBIT .. 3
4. RF RELAY LINK DESIGN AND PERFORMANCE OPTIONS 4
5. OPTICAL RELAY LINK DESIGN AND PERFORMANCE OPTIONS 6
6. ADDITIONAL RELAY SERVICE CONSIDERATIONS 7
7. CONCLUSION 8
ACKNOWLEDGEMENTS 8
REFERENCES 9
BIOGRAPHY 10

1. INTRODUCTION

Current Mars telecommunication relay capabilities are based on proximity links operating in the UHF frequency band (390-450 MHz), employing low-gain, quasi-omnidirectional antennas [1]. This approach has worked well for low-altitude science orbiters equipped with relay payloads, allowing for simple operations with no precision antenna pointing requirements, and achieving relay data rates of up to 2 Mbps. However, these low-altitude science orbiters only provide geometric contact to a given surface user for tens of minutes per sol.

Future dedicated Mars relay orbiters will likely operate in areostationary orbit: circular, equatorial orbits with an orbital period equal to a Martian sol (i.e., the Mars analog of an Earth geostationary communications satellite). Such orbiters can provide continuous communication and navigation services to surface users within view; roughly one-third of the planet surface can view a given areostationary orbiter at its orbit altitude of roughly 17,000 km, assuming a 10 deg surface elevation mask; in addition, low-altitude science orbiters can view an areostationary relay satellite over much of their orbit. This high altitude of the areostationary orbit, however, results in a very large communications slant range relative to low-altitude science orbiters. As a result, highly directional antennas are required in order to achieve high data rates on areostationary relay links, and this motivates a transition to higher frequency bands.

In this paper we explore options for Mars areostationary proximity links at X-band (8.4 GHz), Ka-band (32 GHz) and optical (370 THz) frequencies. Link performance will be characterized as a function of key design parameters for both the orbiter and user spacecraft, including aperture size, transmit power, and pointing accuracy. For optical links, atmospheric attenuation affects will be quantified based on historical measurements of Mars atmospheric opacity. Trades between user and orbiter resource demands will be explored, with a goal of minimizing user burden without violating orbiter resource constraints (mass, power, volume, pointing); several classes of relay orbiter will be considered, corresponding to dry mass ranges of 200 – 1000 kg. Operations concepts for link scheduling and execution, including demand-access services, will be presented.

2. CURRENT MARS RELAY NETWORK ARCHITECTURE

Today a fleet of three National Aeronautics and Space Administration (NASA) orbiters and one European Space Agency (ESA) orbiter are currently operating at Mars, with capability to provide relay telecommunication services, as well as additional proximity link services, to users on the Martian surface. The services can be broadly classified as follows:

978-1-4673-7676-1/16/$31.00 ©2016 IEEE

- Forward data services: transmission of data from a user mission operations center (MOC) to the user mission spacecraft, via a Mars Relay Network (MRN) orbiter.
- Return data services: retrieval of data from a user mission spacecraft and delivery to the user MOC, via an MRN orbiter.
- Time correlation service: measurement of the timing offset of a user mission's spacecraft clock with respect to an MRN orbiter clock, ultimately supporting synchronization of the user mission's clock with UTC.
- Tracking and navigation services: collection of radio metric observables of the user mission's spacecraft (close-loop Doppler and/or open-loop IF samples) via the in-situ link with an MRN orbiter. Post-processing of these data can provide the navigation solutions for the position and velocity of the user mission's spacecraft.
- Open-loop recording services: Nyquist sampling of band-limited IF signal with multi-bit I/Q digitization, for subsequent ground post-processing.

NASA's orbiters include the 2001 Mars Odyssey spacecraft, the Mars Reconnaissance Orbiter (MRO, launched in 2005), and the Mars Atmosphere and Volatile Evolution Mission (MAVEN, launched in 2013). Odyssey and MRO currently provide operational relay support to the Opportunity and Curiosity rovers on the surface of Mars, while MAVEN has demonstrated its relay functional capability and is slated for use once its primary science mission is complete. In addition, ESA's Mars Express Orbiter, launched in 2003, continues to serve as an additional backup relay asset, with demonstration relay passes conducted with the NASA rovers several times each year to confirm relay payload health and maintain operational relay proficiency, and has been used to support tracking of the Phoenix Lander and Mars Science Laboratory spacecraft during their entry, descent, and landing on Mars. Looking forward, ESA's ExoMars/Trace Gas Orbiter (TGO) is slated to launch in 2016, carrying a NASA-provided relay payload; it is scheduled to provide relay services to NASA and ESA landers, in addition to conducting its own primary science mission, after it completes aerobraking to its final science orbit in Nov 2017.

All of these science orbiters carry UHF relay transceivers implementing the CCSDS Proximity-1 Space Link Protocol [2,3,4]. MRO, MAVEN, and TGO each deploy versions of NASA's Electra UHF Transceiver [5,6], a software-defined radio offering data rates up to 2048 kbps. Odyssey flies a prior Cincinnati Electronics (CE)-505 transceiver design, with a maximum data rate of 256 kbps, while Mars Express flies a QinetiQ Melacom transceiver with maximum rate of 128 kbps. Each orbiter incorporates a downward-looking, low-gain UHF antenna, with surface users incorporating a fixed upward looking low-gain UHF antenna, enabling simple relay operations.

While the modest incremental cost of adding a relay payload to a science orbiter has enabled a very economical strategy for establishing this initial Mars relay infrastructure, this approach comes with some important compromises in terms of relay performance. Most significantly, the spacecraft orbit is typically selected based on the science mission objectives. For ODY, MRO, and ExoMars/TGO, this translates into low-altitude, circular orbits, with orbit altitudes of ~300-400 km. The low altitude results in low slant ranges, enabling high data rates even with low gain UHF antennas at both ends of the link. However, the orbit results in very short, intermittent contacts to a given user on the Martian surface. MEX and MAVEN have elliptical orbits with higher apoapsis altitudes, but still offer contact to a given surface user for only a small fraction of each sol. And while individual overflight durations can be longer for passes that occur near apoapsis, these passes are at much larger slant ranges, resulting in much lower data rates when using these orbiters' low-gain UHF antennas.

Today's state-of-the-art in relay capability is illustrated by MRO's relay services to the Curiosity rover [7], which is equipped with an Electra-Lite UHF transceiver, a reduced-mass/volume variant of Electra designed for the more

Table 1. Key Characteristics of current Mars relay orbiters

	ODY	MEX	MRO	MAVEN	ExoMars/TGO
Orbit	390x460 km i = 93 deg	365 x 10,500 km i = 87 deg	250 x 320 km i=93 deg	150 x 6200 km i=74 deg	400 km circular i = 74 deg
Avg Contacts/Sol[1]	2.6	2.0	2.1	2.5	2.6
Avg Pass Duration (min)	9	124	7	81	10
Max Gap Time (hrs)	12.7	25.1	26.0	21.0	12.7
Avg Data Return [2](Mb/sol)	111	83	327	177	587

[1]Contact statistics shown for Curiosity rover at Gale Crater site (4.5 deg S Latitude), assuming a 10 deg elevation mask.
[2]Data return based on best two passes per sol (if available), with each pass constrained to 30-min maximum duration. Link model includes 3 dB link margin.

resource-constrained lander environment. Over the first year of surface operations, MSL's Curiosity rover returned 149 Gb of data via MRO's UHF relay service. Over this period MRO supported 656 relay passes, with a per-pass average data return of 227 Mb. Over 75% of MSL's telemetry has been returned via MRO, with nearly all of the remainder returned via ODY, with its earlier, less capable UHF transceiver.

Table 1 presents a comparison of all five current and near-term planned orbiters, illustrating their contact statistics and data return capabilities. In this analysis, we consider relay support to the Curiosity rover, located in Gale Crater at 4.5 deg S latitude. For the low-altitude orbiters (ODY, MRO, and ExoMars/TGO), there are an average of 2.1 – 2.6 contacts per sol for this low-latitude site, with average durations of just 7-10 min. The highly elliptical orbiters, MEX and MAVEN, offer longer average pass times of 124 min and 84 min, respectively, but still only at an average frequency of 2.0 - 2.5 passes per sol, so are in view only a small fraction of the time. And although average pass times are longer, the average communication slant range is also much larger, resulting in lower instantaneous data rates for these low-gain UHF links.

The short intermittent contact times result in potentially long gaps between relay opportunities. Assuming a 10 deg elevation mask, maximum gap times between passes from Curiosity's Gale Crater site range from roughly ½ sol (for ODY and ExoMars/TGO) to roughly 1 sol (for MEX, MRO, and MAVEN). The intermittent nature of these relay contact opportunities has a significant impact on the operations paradigm for landed missions.

Another important aspect of the relay contact statistics is the Mars local time at which these contacts occur. The MRO and ODY orbiters operate in sun-synchronous orbits for which the ascending node remains at a fixed Local Mean Solar Time (LMST). At the time of Curiosity Landing, MRO's ascending node was at ~3 PM LMST, resulting in relay contacts at ~ 3 AM and 3 PM each Martian day. Similarly, ODY's node was at ~ 4 AM, resulting in contacts at ~ 4 AM and 4 PM each sol. These times worked very well for supporting rover surface operations, allowing data return each afternoon after completion of Curiosity's activities for that sol, providing the science and engineering data needed to plan the next sol's activities and generate a set of commands for delivery the following morning on Mars via an X-band direct-from-Earth link.

In contrast, MEX, MAVEN, and TGO operate in non-sun-synchronous orbits, with the node precessing in LMST. This leads to periods when a given orbiter cannot provide relay contact at an appropriate LMST to support planning for the next sol's activity, resulting in significantly reduced surface operational efficiency for the landed mission.

The data return capability of each orbiter for a Curiosity-class lander is also summarized in Table 1, based on an analysis reported previously in [8]. Data return of ~100 – 600 Mb/sol is possible. The higher returns for MRO, MAVEN, and ExoMars/TGO reflect the more capable Electra UHF payload carried by these orbiters.

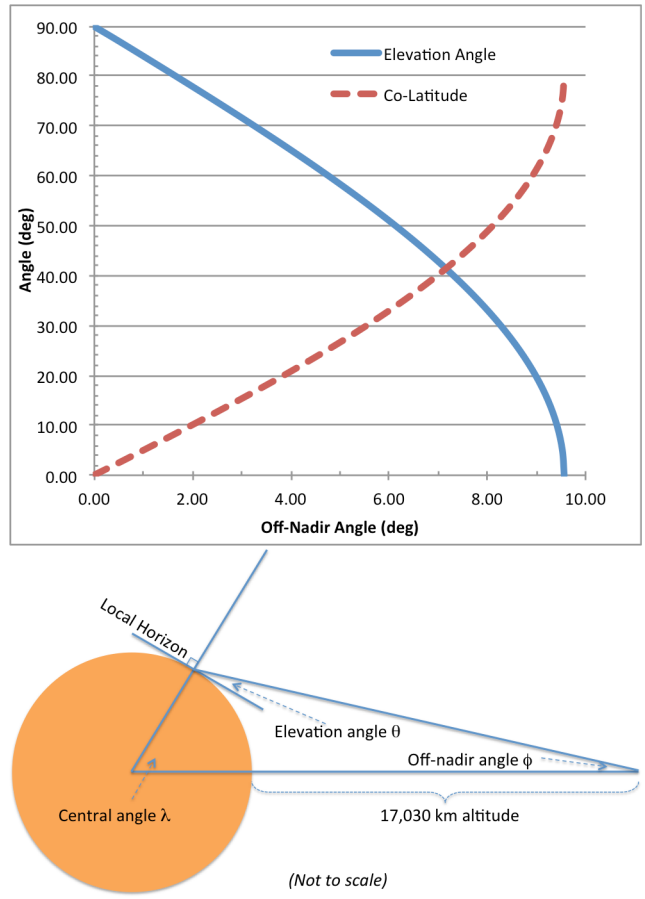

Figure 1. Coverage geometry from areostationary orbit

3. Relay From Mars Areostationary Orbit

In contrast to the short, intermittent relay contact opportunities offered by today's Mars relay network, future areostationary orbiters could radically change our Mars exploration concepts by offering continuous high-bandwidth relay coverage to users on the surface. "Areostationary" refers to the Mars-equivalent of an Earth geostationary orbit: namely, a circular, prograde, equatorial orbit with an orbit period equal to the Mars rotational period. A spacecraft in areostationary orbit remains fixed above a given point on the Martian equator, offering continuous coverage for one side of the planet. The altitude of an areostationary Mars orbit is ~17,030 km, significantly lower than the 35,786-km altitude of a geostationary orbit at Earth, due to the lower mass of Mars.

From areostationary orbit, a relay orbiter can view a significant fraction of one hemisphere of Mars. Figure 1 illustrates the coverage geometry, relating the off-nadir angle ϕ, the central angle λ, and the surface elevation angle θ. (Note that the central angle corresponds to the maximum viewable surface latitude when the surface site and orbiter

are at the same longitude, or to the observable range of longitude to the east or west – relative to the orbiter – for a surface site on the equator.) The disk of Mars subtends a half-angle of ~9.6 deg from areostationary altitude, with an 80 deg central angle. If we require a minimum 10 deg elevation angle, the central angle is reduced to 71 deg, corresponding to 33% of the planet. And for landing sites within +-30 deg of the equator, if the areostationary orbiter longitude is matched to the landing site, the elevation angle is always greater than 50 deg.

Areostationary orbit also provides an excellent high-altitude vantage point for supporting low-altitude orbiters. In this way an areostationary orbiter could be an enabling capability for small, low-cost cubesat or microsat Mars orbiters, freeing them from the burden of the large high-gain antennas and high transmit power required for returning meaningful science data volumes on the long Direct-To-Earth link. In addition, an areostationary orbiter would be well-positioned to support operations in the proximity of Phobos and Deimos.

However, to achieve high data rates on the relay link to this higher altitude relay orbit, it is imperative to move towards higher-gain directional links to compensate for the larger proximity link slant range. The omnidirectional UHF antennas that support today's 2 Mb/s data rates on links between the Curiosity rover and MRO would only support rates of a few kb/s if MRO were simply moved to areostationary orbit; the space loss, scaling as $1/R^2$, is roughly 1000 times larger. This increased space loss can be more-than-compensated for by moving to higher-gain directional links; however, this comes at the cost of additional user burden in terms of pointing accuracy requirements. In the next two sections we explore RF and optical wavelength options for directional proximity links to areostationary relay orbiters.

4. RF Relay Link Design and Performance Options

The key to enabling relay telecom with an areostationary relay is the use of narrow beamwidth high gain antennas (HGA) on both ends of the link. The HGA can take the form of a horn, a dish or an array. An HGA requires the extra mass and complexity of a steering mechanism and the extra operational complexity of maintaining relative pointing knowledge including spacecraft orientation, position and possibly the need for predicts of the same for the relay partner. The mechanisms required for steering and pointing a spacecraft HGA are well developed and understood, especially for the relatively modest gains we are considering in this application. In particular, a dish size of 10cm to 30cm is considered for the Mars surface element (to minimize user burden) and a dish size of 1m is used for the areostationary spacecraft. Table 2 below gives antenna specifications assuming 65% antenna aperture efficiency for X-band and 60% for Ka-band.

Table 2. Dish Antennas Specifications

Dish Antenna	Mass (kg)	1 dB Beamwidth (deg)		Gain (dBi)	
		X-band	Ka-band	X-band	Ka-band
1m Composite	1.2	+/- 0.7°	+/- 0.2°	37	43.3
30cm Aluminum	1.2	+/- 2.3°	+/- 0.7°	26.5	37.8
20cm Aluminum	0.50	+/- 3.5°	+/- 1.0°	23	34.3
10cm Aluminum	0.20	+/- 6.9°	+/- 2.0°	17	23.3

The raw antenna gain advantage of the higher frequency dish relative to the UHF omni does not capture all of the dish antenna advantages. The UHF frequency band combined with an omni-directional pattern results in parasitic coupling of the antenna to many spacecraft structural elements and, in the case of a lander or rover, additional parasitic coupling to objects in the environment. The result is an omnidirectional antenna pattern with unplanned +/- 3 dB gain variations, and for the landed elements additional variations of +/- 1 dB that vary by lander location and orientation. Accommodation for these variations in a fixed data rate relay link is often achieved by lowering the operational data rate by a factor of two and then depending on the link protocol to ride through any remaining signal outages during a pass. Similarly, the omni antennas are very susceptible to multipath reflections from the Mars surface. On most MSL-MRO relay passes we will observe one or more signal outage events due to multipath signal cancellation. These outages typically occur when the elevation angle drops below 25 degrees, and their occurrence and severity varies with local terrain and the rover orientation. Higher frequency dish antennas at X and Ka band are immune to parasitic coupling, and, with the exception of some rare combinations of local terrain and signal geometry, they are also immune to multipath. Thus the uncertainty in the link due to multipath and gain variations is measured in tenths of a dB for the dish-to-dish link.

Dish antennas also have the advantage of a high degree of polarization isolation. This could be applied operationally in simultaneous support of two landed elements. (Our

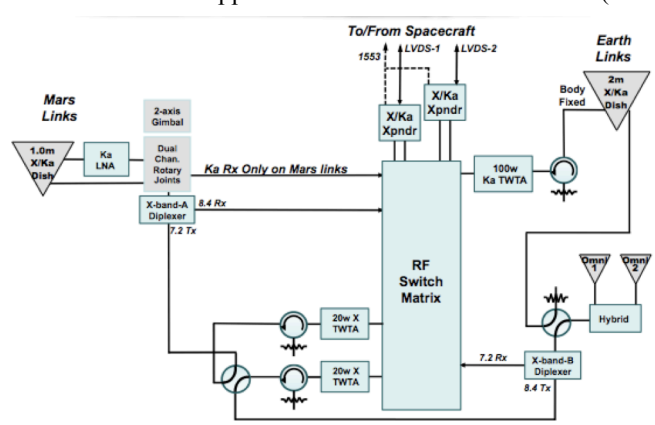

Figure 2. Nominal Mars Areostationary Telecom Design

proposed implementation does not exercise this option.)

The choice of X and Ka band for the high rate relay link has specific hardware and operational advantages. The nominal DSN RF deep space frequencies are 7.2 GHz up/ 8.4 GHz down for X-band and 34.5 GHz up / 32.0 GHz down for Ka-band. Since flight hardware operating at these Tx/Rx frequencies is required for direct-to earth (DTE) telecom, it saves mass and complexity for landers and the areostationary orbiter to reuse the DTE frequency plan and the telecom hardware for the Mars local high rate relay link. This is the design approach presented in this section.

Figure 2 is a block diagram for a telecom subsystem on a Mars Areostationary Relay Orbiter. Two dual frequency X/Ka transponders (Xpndr) are shared between the relay links and the DTE links via a simple RF switch matrix. The estimated telecom subsystem mass for this configuration is 42 kg. Estimated power draw is 250 watts DC with all RF links operational. This design is capable of simultaneous relay and DTE links. If one transponder or one X-band TWTA fails the subsystem can support relay and DTE operations on a time-shared basis. Note that Ka-band is only supported in the Mars-to-Earth direction for the relay and DTE links, providing the highest rate capacity for return of the combination of science and engineering data to Earth. Table 3 shows the typical return link capacities for each link. (It is noteworthy that the 30-cm, 15-W X-band surface transmit configuration is effectively equivalent to the X-band DTE link already flying on MER and MSL.) Link performance assumes a slant range of 19,500 km and OQPSK or suppressed carrier BPSK modulation with a rate 7/8 LDPC code.

Relative to X-band, Ka-band has a raw performance advantage equal to the squared ratio of the frequencies, (32/8.4)^2 = 14.5. Factoring in lower antenna efficiency and higher component losses for Ka-band, we are using a more conservative 12X improvement factor.

Since the link to the aerostationary spacecraft is available continuously, any of the steered HGA links could return a much higher volume per day than is currently provided to MSL via the omni-to-omni UHF link with MRO. As discussed in Section 2, today's relay orbiters can provide data return of up to ~600 Mb/sol based on two short contacts. The highest rate Ka-band link shown in Table 3 would return that data volume in under 10 seconds.

Table 3. Potential HGA-to-HGA relay link rates

Relay Return Link Data rate to 1m dish			
Surface Tx Configuration	**10cm 5w RF**	**20cm 10w RF**	**30cm 15w RF**
X-band	240 kbps	1.8 Mbps	5.8 Mbps
Ka-band	2.9 Mbps	22 Mbps	70 Mbps

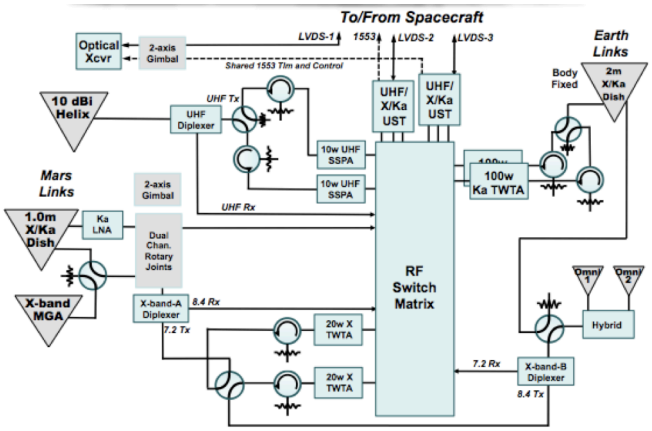

Figure 3 – UHF, X, Ka, and Optical Relay Subsystem

Figure 3 presents a more feature-rich telecom relay subsystem configuration. A redundant Earth link Ka-band TWTA is added for system robustness. In addition, a medium gain X-band proximity link antenna is added, providing a broad beam that covers the surface as well as low-altitude users. This broad hemisphere X-band coverage only offers very low rate data rates, but establishes links which could be useful for 24/7 command, control and monitor links to the surface, and as an ad hoc demand-access hailing channel to request and schedule higher rate HGA-to-HGA links. From areostationary orbit, Mars subtends a solid angle of +/- 9 degrees, and any low altitude spacecraft below 1000 km altitude is captured within a +/- 12 degree solid angle. A simple X-band horn, when nadir pointed, will provide 14 dBi gain out to +/-12 degrees off-boresight. Table 4 shows the low rate, wide area performance that is achievable. Residual carrier, BPSK modulation with Turbo 1/6 code is assumed for this link.

A medium gain, 10 dBi, body-fixed UHF antenna is also added, enabling low-rate communications over the heritage UHF band. The UHF MGA could support a 16-kbps return link from an MSL-like lander or to low-altitude orbiters. Since the medium gain antenna is body fixed, the operational scenario is to steer the spacecraft and MGA toward the user for in-situ telecom service. This is followed later with data relay to earth when the earth link HGA pointing is restored.

This more advanced orbiter also includes an optical telecom link capable of up to 50 Mbps return link from the Mars surface. The details of the optical subsystem are covered in Section 5.

Table 4. X-band HGA-to-MGA low rate link rates

Relay Return Link Data Rate to 14 dBi horn			
Surface Tx Configuration	**10cm 5w RF**	**20cm 10w RF**	**30cm 15w RF**
X-band	1 kbps	8 kbps	16 kbps

The estimated mass of this more capable telecom subsystem is 52 kg for the RF components and an additional 4 kg for the optical components. Estimated power draw is 388 watts DC with all RF links operational plus 44 watts for the optical link.

Figure 4 is the complementary feature-rich telecom relay subsystem with an estimated mass of 41 kg for the RF components and 4 kg for the optical components. For the landed element, it is assumed that only one of the link options would be used at any one time. Power draw is estimated at 110 watts DC for any of the RF links, or 44 watts DC for the optical link.

Removing the optical components from the landed element saves 4 kg and removing the UHF option saves 5 kg.

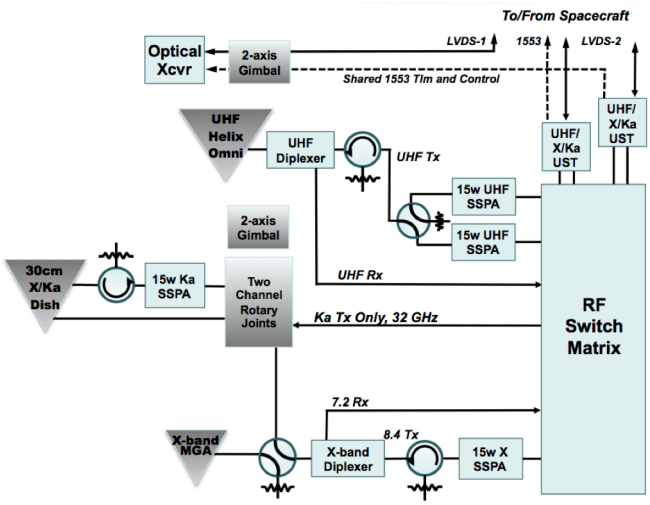

Figure 4. UHF, X, Ka and Optical Landed Element Telecom Subsystem

5. Optical Relay Link Design and Performance Options

Optical communication proximity links from surface assets to areostationary orbiters have the potential of boosting data return volumes while maintaining low user burden. Designing optical systems must account for Mars atmospheric attenuation and trade complexity to optimize performance for a given user burden.

Mars Atmosphere

To assess Mars atmospheric attenuation, Pancam images from the Mars Exploration Rovers (MER) were processed to provide zenith optical depth (τ) at 880 nm. [10]. Figure 5 shows a cumulative distribution of attenuation in decibels (dB) calculated using the expression:

$$880\text{nm_Attn (dB)} = 10*\log10[\exp(-\tau)].$$

The cumulative distribution measurements include seasonal dust storms and the resulting variability in zenith attenuation. At 880 nm the zenith attenuation is < 5 dB 90% of the time and < 15 dB 99.6 % of the time.

For areostationary orbiters the view angles from Mars surface assets are expected to be ±30° from zenith. The dependence of attenuation on zenith angle was studied previously using a Spectral Mars Radiative Transfer (SMART) model [11]. The increased attenuation for +/- 30° zenith angle will be < 2 dB 90% of the time and approximately 5 dB 99.6% of the time. According to the SMART model attenuation increases at higher wavelengths. 1060 nm and 1550 nm are both wavelengths of interest based on the availability of laser sources. For example, at 1550 nm the attenuation will increase by about 1 dB at zenith angles of ±30°. At larger zenith angles the increase in attenuation suffered at higher wavelengths increases. In general operating at lower zenith angles favors optical proximity links at all wavelengths.

Link Concepts

Comprehensive link design for optical proximity links at Mars is still pending. A conceptual point design is reported here. Low-user-burden transceivers with reduced complexity for areostationary orbiters were considered. A mass of 5-10 kg and electrical power of 44–56 W (including a 30% contingency) was targeted.

5-10 cm aperture diameter transceivers with JPL patented monolithic optics [12] were identified for reduced mass. Two-axis gimbals with a fast steering mirror integrated in the transmitter optical path configured in a nested control loop for acquisition, tracking and pointing, was considered.

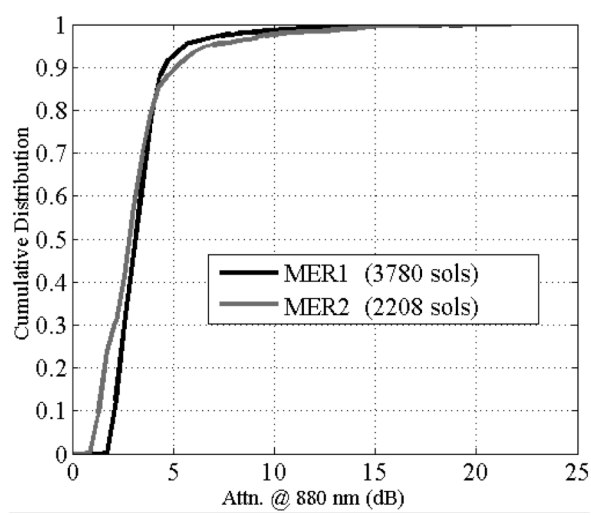

Figure 5. Cumulative distribution of zenith attenuation for MER1 and MER2 at 880 nm derived from Pancam images

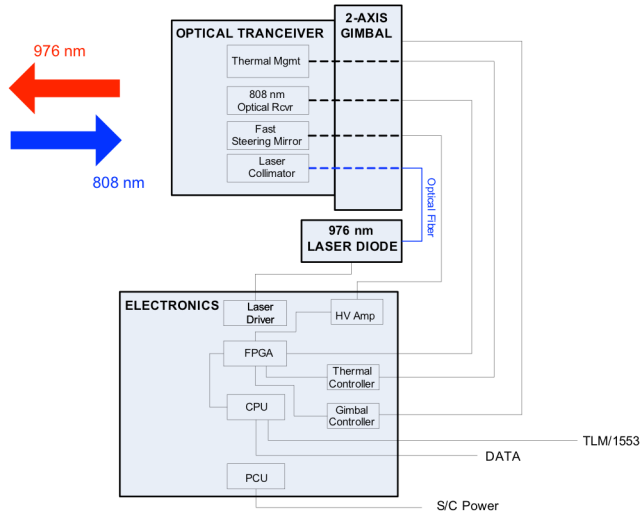

Figure 6. Block diagram of the areostationary orbiter transceiver

A pointing accuracy of 5-μrad would be achievable based on preliminary tests performed at JPL.

Figure 6 shows a conceptual block diagram of the areostationary orbiter transceiver. A 980 nm beacon is transmitted to the Mars surface asset while receiving an 808 nm communications laser. Laser diodes with efficient electrical to optical conversion and capable of direct modulation at rates of 100-200 MHz are considered.

The low complexity architecture uses an optical receiver with an avalanche photo-diode detector front-end (-58 dBm to -65 dBm sensitivity @ 1E-4 bit-error rate). A small fraction of the received signal is split to a quadrant PIN detector for acquisition and tracking.

The autonomous link acquisition concept assumes that the surface user terminal would stare at the orbiter with a field-of-view (FOV) sized to accommodate the uncertainty in its attitude and the knowledge of the orbiter's location.

The orbiter terminal performs a conical scan to cover its uncertainty of the surface user terminal's location, as well as its own position and attitude knowledge, so that the detector on the surface detects flashes of 980 nm laser signal during a scan. The detected flashes are processed to correct the surface user terminal pointing error. As the signal spot gets closer to the FOV center the 808 nm laser is turned on so that the orbiter terminal can also detect the uplink laser and the two terminals cooperatively adjust pointing and start communications.

The time for this process will depend on the initial error. We assume that the orbiter can blind point to within 0.1-0.2 degrees, and that the surface user terminal platform attitude uncertainty can be reduced to ~ 0.3 deg. With these assumptions, the orbiter spiral scan time will range from 35 – 130 seconds. An upper bound on acquisition time will be 2-4 minutes. The concept discussed here has been used successfully for LEO-to-GEO optical link acquisition with acquisition times of 50-70 seconds [13,14]. The scanning sequences for the Mars proximity links need further analysis and definition.

Over the 20,000 km range and 30-deg zenith angles, nominal achievable data-rates using binary pulse position modulation and low-complexity Reed-Solomon forward error correction coding are shown in Table 5.

5-dB atmospheric attenuation and a link margin of 7.5 dB was included. The margin was maintained to accommodate atmospheric attenuation and pointing variations. For operations in high attenuation with large signal reductions the conceptual receiver design supported 20-to-30 dB lower signal while still sensing the signal on the quadrant sensor. Low rate 5-100 kb/s keep-alive communications in the presence of severe operating conditions during dust storms could be supported.

The link description above is for a laser transmitter wavelength of 808 nm with attenuation comparable to 880 nm, and low complexity optical transceivers. The data rates in Table 5 represent 100's to 1000's of photons per bit. Ongoing developments and near Earth implementation have developed capability for 12-14 photons per bit [15] to achieve 0.5-1 Gb/s data rates. The higher performance would require higher complexity with increased user burden. To support future human missions on Mars, investigating the complexity and performance trade will be undertaken in the future. It is noteworthy that in the human exploration era higher performance along with eye-safe wavelengths around 1550nm will be mandated. Under these circumstances the higher attenuation at 1550 nm can be offset by increasing optical link photon efficiency within user burden constraints.

Table 5. Optical Proxoimity Link Capability

		Areostationary Orbiter Tx 980 nm	5 cm dia. (Mb/s)	10 cm dia. (Mb/s)
Surface Asset Tx 808 nm	5 cm dia.	1W	5	20
		2W	15	50

6. Additional Relay Service Considerations

Service Scheduling

For today's low altitude orbiters, with relatively small coverage footprint, relay contacts are short and effectively conflict-free for spatially separated landers. Accordingly, relay scheduling is relatively straightforward, and tied to the

predictable schedule of future overflights for a given lander location.

By contrast, areostationary orbiters provide continuous visibility to a large fraction of one hemisphere of Mars. With multiple landed assets in view, relay service scheduling becomes a more complex function, with the potential for service contention even among spatially separated landers. Accordingly, an areostationary relay orbiter is very well suited to a demand access service request paradigm. As described in Section 4, including a medium gain antenna on the areostationary orbiter, sized to cover the disk of Mars as well as the region of potential low-altitude orbiter relay users, could support on-demand requests for relay service from any user in view. The user service request would specify desired duration, as well as link details such as frequency band, data rate, modulation, and coding. The orbiter would respond with a service commitment, either providing immediate service if orbiter resources allowed, or specifying a future time for a committed service. For an orbiter without a broad-beam RF antenna, or for narrow band optical users, an alternative approach would be for the orbiter to sequentially scan surface users to prompt them for potential service windows.

Tracking and Navigation Services

Today's low-altitude orbiters can provide useful lander position determination based on tracking the Doppler shift in the proximity link signal during several successive overflights. Prior experiments with the Mars Exploration Rovers have demonstated accuracies on the order of 10 m or better using this technique [16].

The lack of appreciable lander-relative orbital motion for an areostationary orbiter, however, implies that this Doppler-based tracking scheme will not contribute significant navigation information for a lander. Instead, range data could offer a constraint on lander location: a given range measurement would effectively constrain the lander to a small circle on Mars corresponding to all surface points that distance from the orbiter. This provides essentially one dimension of surface location, but the other direction is effectively undetermined. By contrast, Doppler measurements on the proximity link between a low-altitude orbiter and the areostationary relay sateliite could provide a strong orbit determination for the low-altitude orbiter, similar in both concept and accuracy to the orbit determination that DSN Doppler tracking currently provides. This could be a valuable service for small Mars cubesats/microsats that cannot support DTE links.

7. CONCLUSION

Today's Mars relay network offers valuable service to landers and rovers, but is inherently limited by the science orbits of the invidivual relay assets, which significantly limit contact time to users on the surface. Future areostationary orbiters have the potential to radically change the paradigm for Mars relay communications, and in turn our surface operations concepts, by offering continuously available high-bandwidth links. However, to enable these high-bandwidth links to the much higher altitude of areostatioanry orbit, we must migrate from today's omnidirectional UHF links to highly directional links at higher RF and/or optical frequencies.

A variety of RF and optical link configurations shown here span a range of user burden in terms of mass, power, and pointing capability. A simple X-band proximity link, using comparable antenna gain and power as MER's and MSL's X-band DTE link, could achieve >5 Mb/s instantaneous data rates, while migrating to Ka-band raises that to 70 Mb/s. User burden can be relaxed, with reduction in lander mass/power, with corresponding reductions in instantaneous data rates; a 10-cm/5-W lander configuration would still offer rates above today's 2 Mb/s maximum, with continuous availability. Similarly, compact optical systems, with 5-10 cm aperture and transmit power of 1-2 W, offer data rates of up to 50 Mb/s.

ACKNOWLEDGEMENTS

The research described in this paper was carried out at the Jet Propulsion Laboratory, California Institute of Technology, under a contract with the National Aeronautics and Space Administration.

REFERENCES

[1] C. D. Edwards, "Relay Communications for Mars Exploration," *Int. J. Satell. Commun. Network*, **25** 111-145, 2007.

[2] Consultative Committee for Space Data Standards (CCSDS), "Proximity-1 Space Link Protocol – Physical Layer," CCSDS 211.1-B-3, http://www.ccsds.org, March 2006.

[3] Consultative Committee for Space Data Standards (CCSDS), "Proximity-1 Space Link Protocol – Data Link Layer," CCSDS 211.0-B-4, http://www.ccsds.org, July 2006.

[4] Consultative Committee for Space Data Standards (CCSDS), "Proximity-1 Space Link Protocol – Coding and Synchronization Sublayer," CCSDS 211.2-B-1, http://www.ccsds.org, April 2003.

[5] Charles D. Edwards, Jr., et al., "The Electra Proximity Link Payload for Mars Relay Telecommunications and Navigation," IAC-03-Q.3.A.06, 54th International Astronautical Congress, Bremen, Germany, 29 September – 3 October, 2003.

[6] E. Satorius, et al., "Chapter 2: The Electra Radio," in "Autonomous Software-Defined Radio Receivers for Deep Space Applications", http://descanso.jpl.nasa.gov/Monograph/series9/Descanso9_Full_rev2.pdf 2006.

[7] C. D. Edwards, Jr, et al., "Relay Support for the Mars Science Laboratory Mission", IEEE Aerospace Conference, Big Sky, MT, March 2-9, 2013.

[8] C. D. Edwards, Jr., et al., "Replenishing the Mars relay network." *Aerospace Conference, 2014 IEEE*. IEEE, 2014.

[9] Abhijit Biswas, Joseph Kovalik, Martin W. Regehr, Malcolm Wright, "Emulating a Optical Planetary Access Link with an Aircraft," SPIE Proceedings, Vol. 7587, 75870B-1-9, 2010.

[10] M. T. Lemmon, M. J. Wolff, M. D. Smith, R. T. Clancy, D. Banfield, G. A. Landis, P. H. Smith, N. Spanovich, B. Whitney, P. Whalley, R. Greeley, S. Thompson, J. F. Bell, S. W. Squyres, "*Atmospheric Imaging results from the Mars Exploration Rovers: Spirit and Opportunity,*" Science, Vol. 306, 1753-1756, 2004. *(Follow on discussions and data exchange with Chad Edwards).*

[11] G. Tinetti, V. S. Meadows, D. Crisp, W. Fong, T. Vellsamy, H. Snively, "*Disk Averaged Synthetic Spectra of Mars,*" Astrobiology, v. 5, #4, 461-482, 2005

[12] William T. Roberts, "Monolithic afocal telescope," US Patent 7843650, Nov. 30, 2010.

[13] Toni Tolker-Nielsen, Gotthard Oppenhauser, "In Orbit test result of an Operational Optical Intersatellite Link between ARTEMIS and SPOT4, SILEX," Proceedings SPIE, 4635, 1-15, 2002.

[14] Berry Smutny, et al. "5.6 Gbps Optical intersatellite communication link," Proceedings SPIE, 7199, 719906-1-8, 2009.

[15] D. O. Caplan, J. J. carney, J. J. Fitzgerald, I. Gaschits, R. Kaminsky, G. Lund, S. A. Hamilton, R. J. Magliocco, R. J. Murphy, H. G. Rao, N. W. Spellmeyer, J. P. Wang, "Multi-rate DPSK Optical Transceivers for Free-Space Applications," Proceedings, SPIE, 8971, 89710K-1-13.

[16] Guinn JR, Ely TA. Preliminary results of Mars Exploration Rover in-situ radio navigation. 14th AAS/AIAA Space Flight Mechanics Meeting, AAS 04-270, Maui, HI, 8–12 February 2004.

BIOGRAPHY

Charles (Chad) Edwards, Jr. *is the Chief Telecommunications Engineer for the Mars Exploration Program and Chief Technologist for the Mars Exploration Directorate at the Jet Propulsion Laboratory. Prior to this current assignment he managed the research and development program for NASA's Deep Space Network. He received an A.B. in Physics from Princeton University and a Ph. D. in Physics from the California Institute of Technology.*

David J. Bell *is the supervisor of the Communications Systems & Operations group, 337H at the Jet Propulsion laboratory and has over 30 years experience in all aspects of flight and ground radio system design including modulation, coding, antennas, propagation and interference mitigation. Mr. Bell has published numerous telecom technical papers and holds several patents related to antennas and coding systems for telecom operations in difficult propagation and signal environments. Mr. Bell was the system engineer for the development, flight build and test of the first Electra Software defined radio subsystem that enables relay telecom service on the MRO, MSL, MAVEN Mars spacecraft.*

Abhijit Biswas *is a Principal member of staff and Supervisor of the Optical Communication Systems at the Jet Propulsion Laboratory (JPL), California Institute of Technology. He has been involved in system engineering and end-to-end field demonstrations related to free-space optical communications for the past 15 years. He received a Ph.D. in Molecular Science from Southern Illinois University He has published over 100 conference and journal papers.*

Dr. Kar-Ming Cheung *is a Principal Engineer and Technical Group Supervisor in the Communication Architectures and Research Section (332) at JPL. His group supports design and specification of future deep-space and near-Earth communication systems and architectures. Kar-Ming Cheung received NASA's Exceptional Service Medal for his work on Galileo's onboard image compression scheme. He has authored or co-authored 30+ journal papers and conference papers in the areas of error-correction coding, data compression, image processing, and telecom system operations. Since 1987 he has been with JPL where he is involved in research, development, production, operation, and management of advanced channel coding, source coding, synchronization, image restoration, and communication analysis schemes. He got his B.S.E.E. degree from the University of Michigan, Ann Arbor, in 1984, and his M.S. and Ph.D. degrees from California Institute of Technology in 1985 and 1987, respectively.*

Robert E. Lock *received his B.S. degree in Mechanical Engineering from Cal Poly, San Luis Obispo in 1985. He has been with JPL for more than 27 years. He currently leads orbiter mission formulation studies for the Mars Exploration Program Office at JPL. He has been Mission Manager for the JPL payloads on the ExoMars Trace Gas Orbiter mission, lead mission planner for Mars Reconnaissance Orbiter mission and mission planning team chief for the Magellan Mission to Venus. He was the lead systems engineer for the Jupiter Europa Orbiter mission study and has led systems engineering, operations design, and aerobraking design for Mars Scout proposals. His career started with work on ISS, Strategic Defense Initiative, and Magellan spacecraft development at Martin Marietta Aerospace in Denver Colorado.*