Design and Testing of an Active Heat Rejection Radiator with Digital Turn-Down Capability

Eric Sunada[1], Gajanana C. Birur[2], Gani B. Ganapathi[3], Jennifer Miller[4], and Daniel Berisford[5]
Jet Propulsion Laboratory, California Institute of Technology, Pasadena, California, 91109

and

Ryan Stephan[6]
NASA Johnson Space Center, Houston, Texas, 77058

NASA's proposed lunar lander, Altair, will be exposed to vastly different external environment temperatures. The challenges to the active thermal control system (ATCS) are compounded by unfavorable transients in the internal waste heat dissipation profile: the lowest heat load occurs in the coldest environment while peak loads coincide with the warmest environment. The current baseline for this fluid is a 50/50 inhibited propylene glycol/water mixture with a freeze temperature around -35 ^{o}C. While the overall size of the radiator's heat rejection area is dictated by the worst case hot scenario, a turn-down feature is necessary to tolerate the worst case cold scenario. A radiator with digital turn-down capability is being designed as a robust means to maintain cabin environment and equipment temperatures while minimizing mass and power consumption. It utilizes active valving to isolate and render ineffective any number of parallel flow tubes which span across the ATCS radiator. Several options were assessed in a trade-study to accommodate flow tube isolation and how to deal with the stagnant fluid that would otherwise remain in the tube. Bread-board environmental tests were conducted for options to drain the fluid from a turned-down leg as well an option to allow a leg to freeze/thaw. Each drain option involved a positive displacement gear pump with different methods of providing a pressure head to feed it. Test results showed that a start-up heater used to generate vapor at the tube inlet held the most promise for tube evacuation. Based on these test results and conclusions drawn from the trade-study, a full-scale radiator design is being worked for the Altair mission profile.

Nomenclature

ATCS	=	active thermal control system
CO_2	=	carbon dioxide
CV	=	check valve
FM	=	flow meter
in	=	inch

[1] Senior Member of Engineering Staff, Thermal Hardware and Fluid Systems Engineering Group, 4800 Oak Grove Drive, Pasadena, California 91109.
[2] Principal Engineer, Thermal and Cryogenic Engineering Section, 4800 Oak Grove Drive, Pasadena, California 91109, AIAA Member.
[3]Group Supervisor, Thermal Hardware and Fluid Systems Engineering Group, 4800 Oak Grove Drive, Pasadena, California 91109, AIAA Member.
[4]Associate Member of Engineering Staff, Thermal Hardware and Fluid Systems Engineering Group, 4800 Oak Grove Drive, Pasadena, California 91109, AIAA Member.
[5]Member of Engineering Staff, Thermal Hardware and Fluid Systems Engineering Group, 4800 Oak Grove Drive, Pasadena, California 91109, AIAA Member.
[6]Project Manager Advanced Thermal Technology Project, Exploration Technology Development Program, Houston, Texas 77058. AIAA Member.

IPG	=	inhibited propylene glycol
K	=	Kelvin
kg	=	kilogram
kW	=	kilo-Watts
LEO	=	low Earth orbit
LLO	=	low lunar orbit
LSO	=	lunar surface operations
LV	=	latch valve
m	=	meter
NASA	=	National Aeronautics and Space Administration
PG	=	pressure gauge
Q_{rej}	=	heat rejected
TLC	=	trans lunar coast
TRL	=	technology readiness level
TS	=	tube set
T_{sink}	=	equivalent sink temperature
W	=	Watts
^oC	=	degrees Celsius
α	=	solar absorptivity
ε	=	IR hemispherical emissivity
ΔP	=	pressure difference

I. Introduction

NASA's proposed lunar lander, Altair, is part of NASA's Constellation Program to successfully return humans to the Lunar surface by 2020 and is in the preliminary design phase. The proposed mission requirements are significantly different from that of the Apollo program. The base-lined thermal control system for Altair is an active, mechanically-pumped, dual loop architecture. Altair will be exposed to vastly different external environment temperatures to the point where a flight-proven single-loop architecture cannot preclude the possibility of fluid freezing while still adhering to non-toxicity, technology readiness, and mass requirements. This discussion focuses on a technology development effort in support of Altair that would permit the use of a single loop system via a novel turn-down mechanism which would result in an overall mass savings.

In addition to the extreme sink temperatures, the challenges to the active thermal control system (ATCS) are compounded by unfavorable transients in the internal waste heat dissipation profile: the lowest heat load occurs in the coldest environment while peak loads coincide with the warmest environment. The two bounding scenarios which drive the ATCS radiator design are 1) 950 Watts of dissipation during trans-lunar cruise where the average, effective sink temperature is 70 Kelvin, and 2) 6 kilo-Watts of dissipation while on the lunar surface with an average sink temperature of 210K. There is also a significant mass savings if a single-loop system can be employed in which case the radiator is serviced by the same working fluid used in the cabin[1]. The current baseline for this fluid is a 50/50 inhibited propylene glycol/water mixture with a freeze temperature around -35 ^oC. While the overall size of the radiator's heat rejection area is dictated by the worst case hot scenario, a turn-down feature is necessary to tolerate the worst case cold scenario.

A radiator with digital turn-down capability (Digital Radiator) is being designed as a robust means to maintain cabin environment and equipment temperatures while minimizing mass and power consumption. It utilizes active valving to isolate and render ineffective any number of parallel flow tubes which span across the ATCS radiator. Hence the term "digital" used to describe the discretized states. Several options were assessed in a trade-study to accommodate flow tube isolation. Factors traded included turn-down/turn-up versatility (towards maximizing plug-and-play capability), technology readiness level, and robustness in holding the exit fluid temperature set-point. Plug-and-play versatility is maximized if the working fluid can be drained from a turned-down leg to prevent freezing during cold scenarios. This would remove any time constraints on having to thaw the leg prior to re-use. But draining a leg of its fluid is complicated by two main considerations: enough fluid must be removed to preclude start-up issues related to the formation of frozen plugs; and it must be done in a way so as to not lose control of the exiting fluid temperature set-point. Several techniques toward this end are examined and component-level test results are discussed. Also discussed are options for mass savings and TRL benefits which can be realized by allowing a valved-off leg to freeze. This would be at some expense to plug-and-play versatility: turn-down

continues to be immediate and on-demand, but immediate turn-up of this leg is limited to a finite number of instances.

Bread-board environmental tests were conducted for several methods to drain a leg: 1) a start-up heater is used to ensure vapor formation at the tube inlet to feed a positive displacement drain pump; 2) instead of a start-up heater, a gas bubble in injected near the tube inlet to provide the driving pressure; and 3) CO_2, which is dissolved in the working fluid at the ATCS working pressure, is used to push fluid to the drain pump as it comes out of solution. A freezable option was also tested which involved allowing a valved-off leg to freeze. Immediate, one-time turn-up capability on this frozen leg was also demonstrated via a surrogate tube dedicated for such use.

II. ATCS Requirements

The ATCS for the Altair lunar lander must accommodate all phases of the mission. The current Altair design relies on the radiator to reject waste heat during low Earth orbit, trans-lunar coast, low lunar orbit, and lunar surface operations. The heat rejection requirement varies from 0.5 kW to 6 kW. But what drives the need for a radiator with turn-down capability is the fact that lower heat loads occur during times of cold sink temperatures and peak heat loads occur during times of high sink temperatures. Figure 1 shows the heat rejection requirements and corresponding sink temperatures.

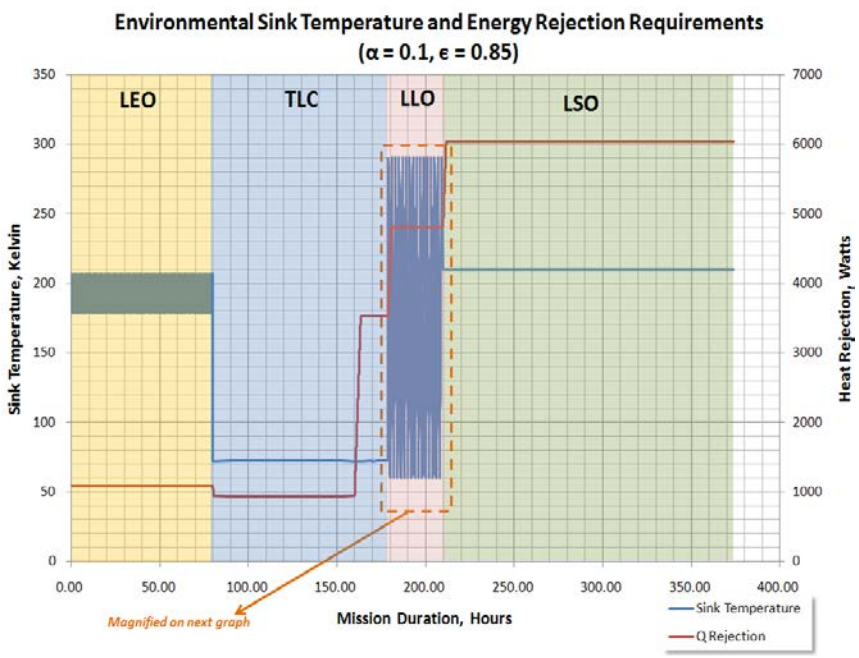

Figure 1a. Effective sink temperatures for the radiator and corresponding heat rejection requirements[2].

The requirements on fluid temperatures which drive the radiator design are the climate control set-point temperature and the maximum allowed operating temperature of the various Altair components. The set-point of the fluid which exits the radiator system and enters Altair must be maintained at 10 ^{o}C and is used for humidity control. This set-point can be maintained with the help of bypass legs and fluid mixing, but radiator turn-down is needed to accommodate the wide variation in sink temperatures and heat rejection requirements. Fluid which exits Altair and enters the radiator system can be as high as 40 ^{o}C.

III. Digital Radiator Concept

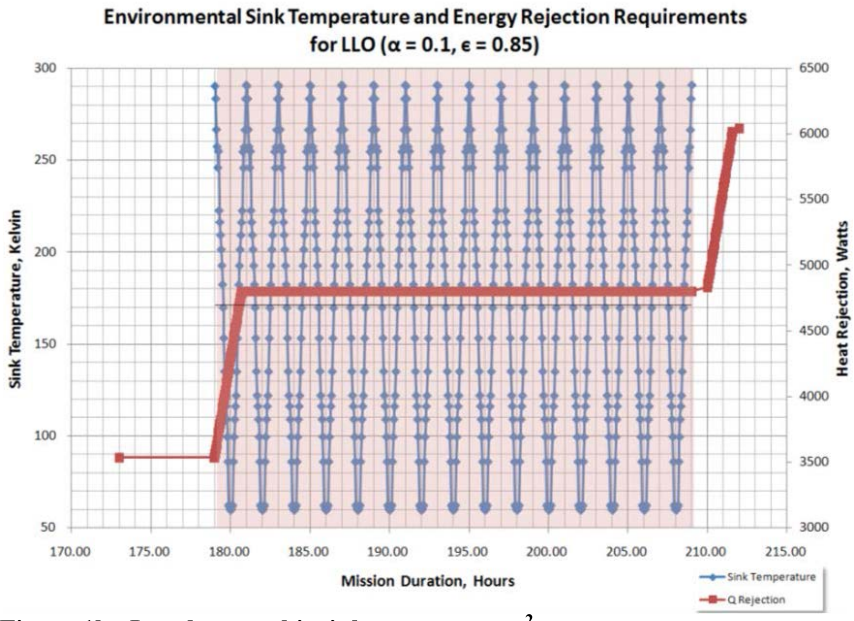

Figure 1b. Low lunar orbit sink temperatures[2].

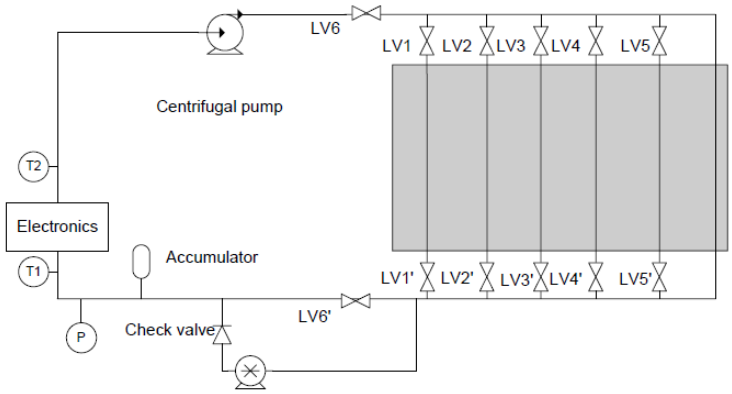

Figure 2. Original Digital Radiator concept schematic.[3]

The key idea behind the Digital Radiator is to provide variable heat rejection capabilities by removing effective radiator area when the heat rejection need is low, and utilizing all area when it is high. This is achieved with a combination of isolating latch valves on either side of flow branches and a gear pump to evacuate the fluid from legs which are not needed for heat rejection. In its most basic form, the Digital Radiator system utilizes a single phase centrifugal pump to circulate the fluid over the Altair equipment and through the radiator flow tubes. An accumulator is sized to accommodate all the fluid drained from the legs and manifolds as well as to accommodate volume changes due to temperature variations. The concept is shown in Figure 2.

In addition to the centrifugal pump, a gear pump is provided to drain the fluid from the branches which are to be removed from the flow path (i.e., turned-down). The gear pump is activated only when the fluid is to be drained from a/multiple leg(s). In addition to the variable legs (only 5 shown for simplicity), an additional fluid leg which is always "on" is provided to ensure no freezing occurs in the last leg. This allows warm fluid to flow adjacent to the latch valves and thereby helps to maintain their minimum allowable temperatures while in the closed state. The actual operation of the system to accommodate a transition from a high heat rejection state, when all the branches are open for maximum heat rejection, to a lower heat rejection state is as follows:

1. turn off centrifugal pump;
2. isolate radiator from remaining system with LV6 and LV6' and close all branch valves LV1, LV1' to LV5,LV5';
3. open lower latch valve LV5';
4. turn on gear pump to evacuate leg 5, the always "on" leg, and the manifolds;
5. close LV5' and open all other latch valves, except LV5 (which isolates leg 5);
6. turn on centrifugal pump to start system up again.

The check valve prevents unwanted fluid circulation through the gear pump. The variable heat rejection state changes will be controlled by flight software and can be programmed to include fault protection. Actual implementation of the Digital Radiator would likely include a bypass line and valve. In this case, the centrifugal pump can remain on during the turn-down process.

The benefits of the Digital Radiator concept are predictable and repeatable heat rejection performance, maximum turn-down capability, accommodation of a wide range of working fluids due to the removal of stagnant fluid, and potential for fault tolerance.

The above provides a general concept description of the Digital Radiator. Of course, several areas require additional hardware for actual implementation and some require further development such as the design and reliability of the latching valves and evacuation pump. But a fundamental issue relates to how the design deals with the fluid within a turned-down leg. If the design is to drain the fluid, enough must be removed to preclude start-up issues related to the formation of frozen plugs; and it must be done in a way so as to not lose exit temperature set-point. If the design is to allow the fluid to freeze, reintroduction of the leg back into the flow (i.e., leg turn-up) must be considered.

A. Digital turn-down via Isolation and Fluid Removal

Baseline Concept

The original baseline as shown in Figure 2 and previously reported in reference 3 was found to have a fundamental flaw in the design. It requires draining to occur on a closed, isothermal volume at 0-g using a positive displacement pump. This is not possible due to vapor formation occurring at the point of lowest pressure which is the pump inlet. The pump continues to draw vapor and is unable to pump fluid. Time for fluid removal is excessive and cavitation effects on pump life preclude the feasibility of this concept. Previous bench-top testing which showed ~90% of fluid evacuation from a leg[3] was due to air erroneously left in the system. Once the gear pump was activated, the air expanded within the closed volume and displaced liquid toward the pump inlet.

After this realization, four design options for driving fluid out of tube were studied (Table 1). Options 1, 2, and 3 were tested at the coupon-level using deionized water. Option 4 has flight heritage[9] and was not tested here.

Option	Drain Method	Description
1	CO_2 injection behind fluid column	A pressurant tank of CO_2 is used. Gas is injected just prior to activating drain pump. Gas provides driving pressure for fluid evacuation.
2	CO_2 dissolved in the working fluid	CO_2 is dissolved in the working fluid while at nominal operating pressures. Once the isolated leg's pressure is reduced upon drain pump activiation, CO_2 comes out of solution and helps to provide driving pressure for fluid evacuation.
3	Start-up heater used at start of the fluid column	Heat is applied at the end of the column furthest from the pump. Vapor is generated there upon pump activation and provides driving pressure for fluid evacuation.
4	Vent the fluid to space	The fluid is vented to space through a valve. Requires an upstream pressurant to ensure proper venting. Flight heritage on MPF and MER.

Table 1. Options for evacuating fluid from an isolated tube.

Option 1: CO_2 injection

This method of fluid evacuation relies on the injection of a pressurant gas at the far end of the fluid column opposite the evacuation pump. The gas is injected just prior to pump activation. The gas then provides positive pressure to drive fluid into the pump.

Coupon-level tests were performed on a given tube. Several tubes were used ranging in diameter from ¼-inch to ½-inch. Each was 4 feet long. Results indicated that 90 to 95% of the fluid was evacuated in about 5 to 10 seconds using this method. This amount of remnant fluid can likely be dealt with to preclude formation of an ice plug during flight. Concepts such as a wicked inner wall and/or a combination of hydrophobic and hydrophilic surface treatments may be such methods.

Figure 3 is a notional diagram of how the option may be applied in the flight configuration. When the heat rejection needs to be turned-down, Main Valves #1 and #2 are closed and evacuation is started on all tube sets for which flow is currently allowed. A small amount of gas is introduced at Main Valve #1 to assist in evacuation. All valves are then closed on those legs to be removed from the flow path. Main Valves #1 and #2 are then opened for the fluid circulation. Note that it is necessary to drain the entire radiator whenever a turn-down is required because of the risk of freezing the stagnant lines. One way around this is to introduce another valve set or replace the downstream latch valves with 3-way latching valves. It would also require dedicated CO_2 gas inlet lines from the tank to each leg as well as dedicated drain lines between each leg and the evacuation pump. A final flight implementation would likely require such measures because of the difficulty in holding the fluid set-point when flow is bypassed.

Option 2: Dissolved CO_2 comes out of solution to provide fluid displacement into the evacuation pump

The concept is that CO_2 dissolved into the fluid at the given system pressure would, upon evacuation pump activation, come out solution. The gas would then provide positive displacement of the fluid into the pump. The coupon test had about four times the equivalent tube volume of CO_2 gas (at standard temperature and pressure) dissolved into the water. The water was kept at sufficiently low temperature and high system pressure to maintain dissolved gas.

Test results showed inconsistent evacuation levels using this option. Remnant fluid quantities were usually large enough such that ice plugs would form when exposed to cold sink temperatures. Testing showed CO_2 bubble formation occurring throughout the tube upon pump activation. But without a means to focus gas generation upstream of the column, a volume of liquid will inevitably remain in the tube.

Option 3: Start-up heater

The dissolved CO_2 method described above (Option 2) suffers from the inability to preferentially locate the formation of gas for optimum fluid displacement. A third option studied addresses this limitation. A heater placed on the outer diameter of the tube at the far, upstream end is used to heat the local volume of liquid. As the system pressure drops after pump activiation, vapor is formed at this location of higher temperature. By placing this heater at the point farthest from the pump, the bulk of the fluid can displaced.

Testing of this configuration resulted in about 95% of the fluid evacuated from the tube, and these results were repeatable. These tests were not optimized for directing heat into the liquid. They served as a proof-of-principle test only. Ideal conditions would only require a few Joules of energy to vaporize enough water to displace the tube volume.

From a flight configuration perspective, start-up heaters could be placed on the downstream side of Main Valve #1 and as well on the inlet to each Tube Set, as shown on Figure 4. When the heat rejection needs to be turned-down, Main Valves #1 and #2 are closed and start-up heat is applied at Main Valve #1 and for those legs through which flow is currently allowed. The evacuation pump is then activated and the entire radiator is drained. All valves are then closed for those legs to be removed from the flow path. Main Valves #1 and #2 are then opened for fluid circulation. Note again that in this configuration it is necessary to drain the entire radiator whenever a turn-down is required because of the risk of freezing the stagnant lines. Replacing the downstream latch valves with 3-way latching valves and adding dedicated drain lines from each 3-way valve to the evacuation pump.

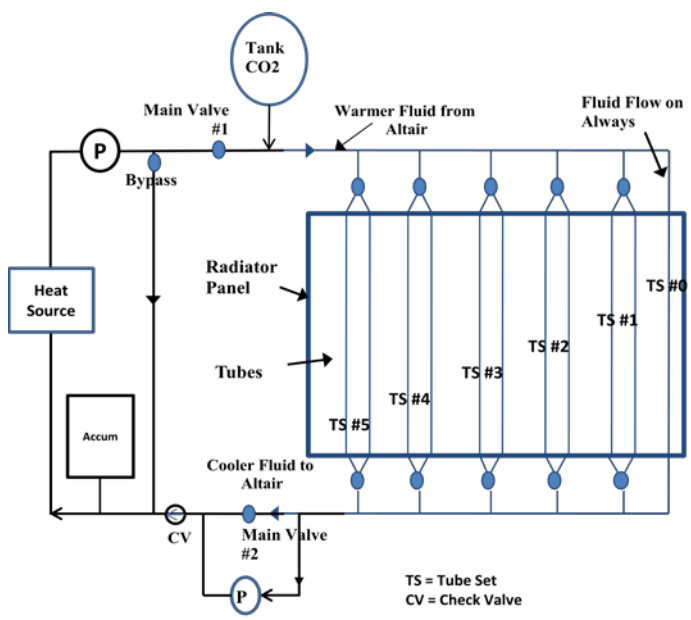

Figure 3. Notional flight configuration for Option 1: CO_2 gas injection.

Option 4: Vent the fluid to space

A fourth option is to vent the fluid to space. This has flight heritage on several spacecraft such as the Mars Pathfinder and Mars Exploration Rover Projects where the heat rejection system working fluid (Freon-11) was vented to space prior to entry at Mars. The drawbacks of this option are 1) that it consumes working fluid each time a turn-down is needed; 2) a pressurant tank of a gas is needed to blow down the fluid to be rejected; and 3) venting will introduce a nutation on the spacecraft. Consuming working fluid at each turn-down will require extra fluid to be carried which results in a higher launch mass. The purge gas from a pressurant tank is required to mitigate freeze risks. Relying solely on the ΔP between the tube volume and vacuum of space to vent the liquid can result in a frozen ball at the vent exit.

A flight configuration, shown notionally in Figure 5, has the advantage of removing the evacuation pump.

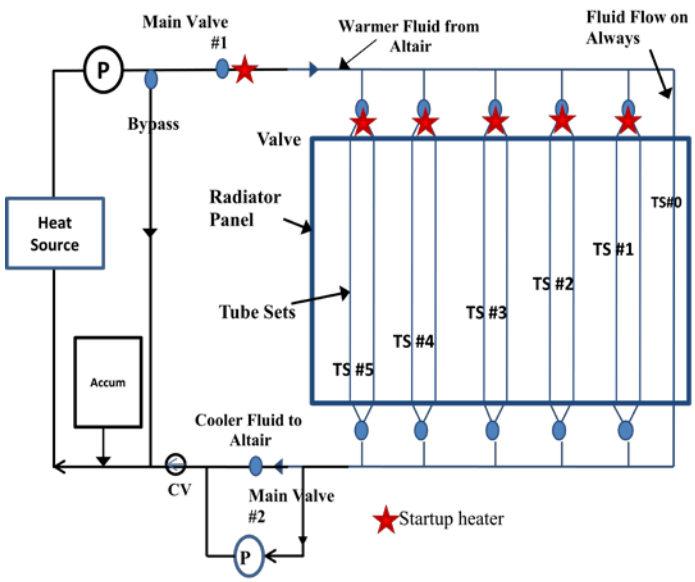

Figure 4. Notional flight configuration for Option 3: Start-up heater.

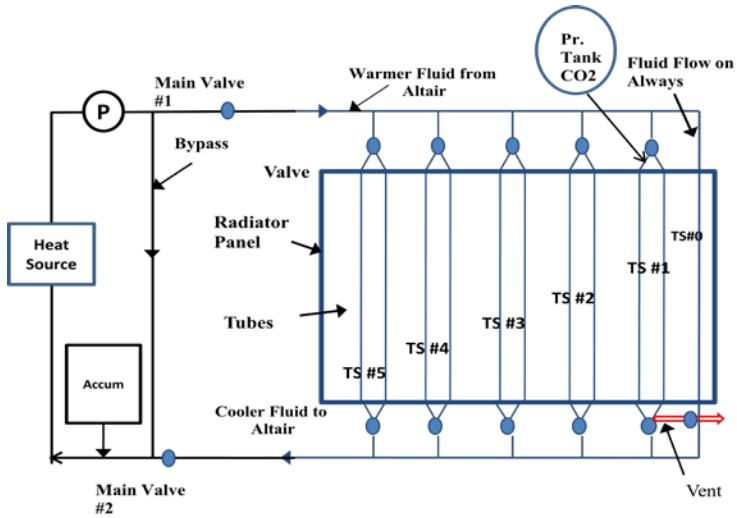

Figure 5. Notional flight configuration for Option 4: Vent to space.

B. Option 5: Digital turn-down via Isolation and Freeze Tolerance

A given tube set could simply be allowed to freeze after being valved-off. That portion of the radiator can then be returned to the system as an active heat rejection surface (i.e., turned-up) by allowing flow through a nearby surrogate tube. The surrogate tube is evacuated prior to launch and has its own set of latch valves which remain closed until turn-up is required. The disadvantage is a lack of versatility: the frozen portion of the radiator can only be turned-up as many times as there are surrogate tube assemblies.

For the specific Altair mission profile shown in Figure 1a, this may be an acceptable option because turn-down is only required once when transitioning from low Earth orbit to trans-lunar cruise. Figure 6 shows the notional concept of using a surrogate tube. If Tube Set #1 is to be turned-down, its Main Tube is shut down by closing the downstream latch valve. Fluid is then allowed to freeze in this tube. The upstream valve remains open to allow for any expansion upon freezing. When that portion of the radiator under Tube Set #1 needs to be returned to the flow path, the valves on the Surrogate Tube (which to this point has been evacuated) are opened. The downstream latch valve for Tube Set #1 is also opened to allow for flow upon thawing.

IV. Digital Radiator Trade Studies

A qualitative trade study was performed for the five Digital Radiator options listed above. The parameters traded were the following: mass, power, reliability, volume, scalability, technology readiness level (TRL), and flexibility. Flexibility refers to the range of accommodation for various missions beyond that of Altair and is a key parameter. Table 2 summarizes the results of the trade study.

Option 1: CO_2 injection

Drawbacks associated with Option 1 include increased mass due to the addition of a CO_2 tank as well as the need for extra valving to hold set-point during turn-down operations. Also, increasing quantities of CO_2 will dissolve into the working fluid with each turn-down operation. The effects of CO_2 on the main pump and material compatibility are open items. Because of the use of a consumable, mission flexibility is somewhat compromised.

Option 2: Dissolved CO_2 comes out of solution to provide fluid displacement into the evacuation pump

In addition to the concerns with dissolved CO_2 listed above, coupon-level testing showed difficulty in getting consistent quantities of fluid evacuation. The amount of remnant fluid was also relatively high. As a result, Option 2 was dropped from consideration.

Option 3: Start-up Heater

The drawback of using active heater power to promote fluid evacuation is overshadowed by the benefits: no need for an injection gas and higher mission flexibility. Coupon-level tests showed promise of consistently high evacuation volumes with a non-optimized heater configuration. But like the other options associated with a single evacuation pump, the common flow path from each tube set to the evacuation pump presents a problem. All flow paths must be evacuated whenever a turn-down operation occurs to preclude freezing of stagnant fluid. But maintaining exit fluid temperature set-point is likely not achievable because of the time required to evacuate.

Option 4: Vent the fluid to space

The main benefit of this option is its high reliability. This is a flight-proven technology and does not require an evacuation pump. But mass is increased due to the need for a pressurant tank, and mission flexibility suffers due to a drawdown of working fluid with each turn-down operation.

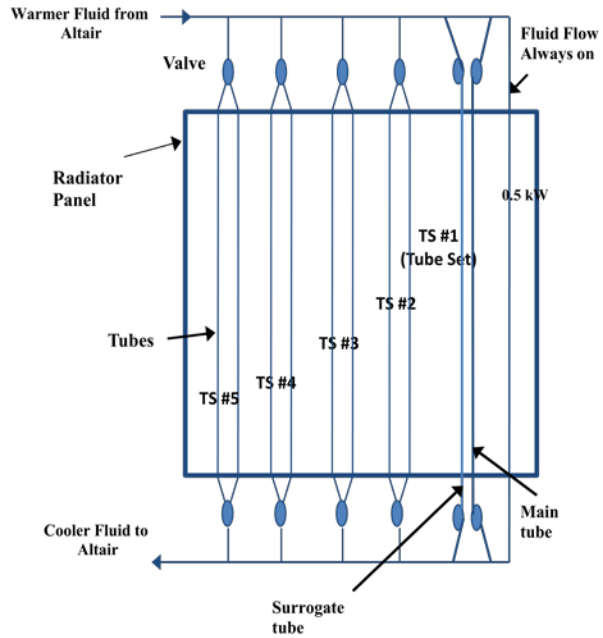

Figure 6. Notional configuration for Option 5: Freezable leg with surrogate tube.

Option 5: Digital turn-down via Isolation and Freeze Tolerance

Of all options, this one has the lowest mass because it does not require a pressurant tank nor an evacuation pump. Reliability is also very high and it requires less overall volume. This option is rated with high reliability primarily because it does not involve an extra pump, which is the case with Options 1 through 3. Nor does it involve the need for a pressure generating mechanism to blow-down working fluid from a tube set (Options 1 through 4). But flexibility suffers because radiator turn-up requires a surrogate tube for each instance of occurrence.

Performance Parameter	Baseline	Option 1	Option 2	Option 3	Option 4	Option 5
Configuration	Evac pump	Evac pump + CO_2 tank	Evac pump + dissolved CO_2	Evac pump + startup heater	CO_2 tank + vent valve to space	Surrogate tube and valve set
Mass	Heavy	Heavier	Heavy	Heavy	Heavy	Least Heavy
Mass for Altair config	120 kg	132 kg	120 kg	121 kg	123 kg	112 kg
Power	Nominal	Nominal	Nominal	Above nominal	Below nominal	Least power
Power for Altair config	20W for 5 minutes	20W for 5 minutes	20W for 5 minutes	20W for one minute + 20W for 5 minutes	10W for 1 minute	5W for 10 seconds
Reliability	Medium	Medium	Medium	Medium	High	Very High
Volume	Large	Large	Large	Large	Large	Smaller
Scalability	Yes	Yes	Yes	Yes	Yes	Yes
TRL	4	5	4 to 5	4 to 5	5	5
Flexibility	High	Not as high	High	High	Not as high	High only with mass increase
Comments	High amount of remnant fluid makes this option untenable	Material compatibility with dissolved CO_2 and its effect on main pump is TBD	Material compatibility with dissolved CO_2 and its effect on main pump is TBD	Requires a sufficient amount of heated fluid to displace tube volume	MPF, MER flight heritage	Each leg can be turned-up only once per surrogate tube

Table 2. Trade-study summary for Digital Radiator configuration options.

In summary, options involving CO_2 dissolving into the working fluid were dropped because of the previously mentioned concerns. Options 3, 4, and 5 were then carried forth for further consideration. Options 3 (start-up heater) and Option 5 (freeze tolerant with surrogate tube) were also tested at the bench-top level. Option 4 was not tested due to its flight heritage.

V. Bench-Top Testing

A bench-top test article was constructed to better investigate Options 3 and 5 above. The goal of the test article was to test full-scale Altair tube lengths for evacuation capability (Option 3) and the effect of freezing using an IPG working fluid. For the startup heater option, the key objective was a qualitative assessment of remnant fluid after evacuation how the subsequent freezing of this fluid affects turn-up of the leg. For the freezable tube option, the objective was to characterize the thaw process after flow is sent through the adjacent surrogate tube.

Figure 7 is a schematic of the bench-top test article. It consists of a pair of tubes to represent the freeze-tolerant/surrogate tube option (tubes labeled Leg 1 and ALTLEG in Figure 7), a tube for the start-up heater option (Leg 2), and a tube for the continuous flow leg (Leg 3). All tubes are 1/4" ID aluminum tubing. The working fluid was a 50/50 mixture of IPG and distilled water. Commercial off-the-shelf solenoid valves were used for valves V-2 through V-7. Valves V-8 and V-9 are 3-way latching valves. The gear pump is a suction shoe-style pump from Micropump. The freeze-tolerant/surrogate tube lengths are less than would be used for Altair, but the startup heater tube is the full 3.75m long. The tubes are placed on a heat exchanger plate and are clamped with thermal gasket material to it. A chiller is used to drive the plates sufficiently low in temperature to freeze the IPG within the tubes. Figure 8 is a photograph of the test article.

Bench-top testing for Option 3: Startup heater

The test simulated the operational scenario by maintaining flow through the tube sets using the centrifugal pump with no bypass flow. The scope of this test did not include verification of exit temperature set-point with a bypass controller, and the bypass line was included for logistical purposes only. Turn-down was initiated by closing the solenoid valves V-4 and V-7. Heat is then applied at the startup heater near V-4. Several iterations of this scenario were run with increasing amount of energy imparted at the startup heater. For each case, the tube was then drained by opening V-7 and redirecting flow to the gear up via V-8. Vapor is verified to exist at the sight glass, SG-2, and the valve V-7 is closed to isolate the tube and complete the turn-down process. Chiller plates are at sufficiently cold temperature to freeze the IPG.

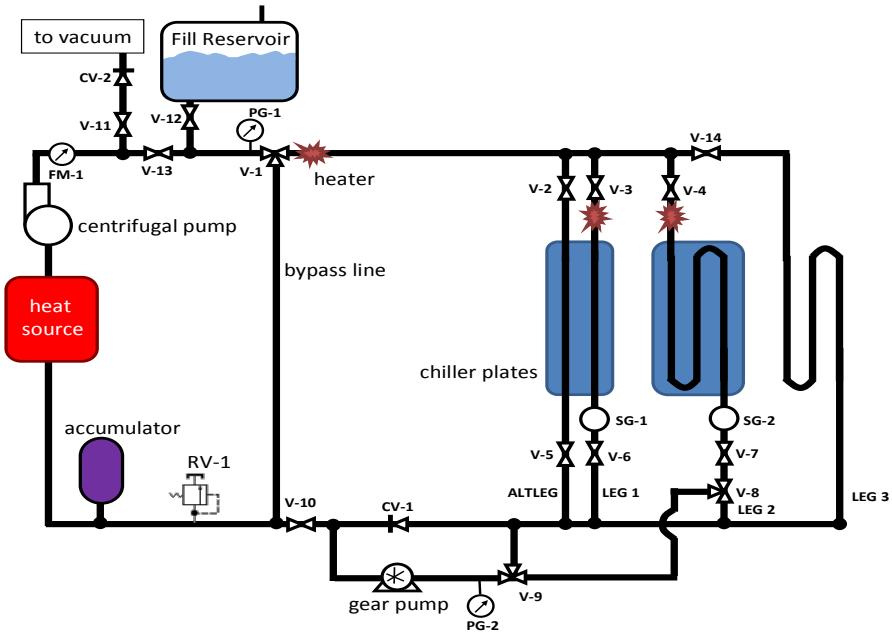

Figure 7. Bench-top test article used to test Option 3 (start-up heater) and Option 5 (freeze tolerate tubes with surrogate tube).

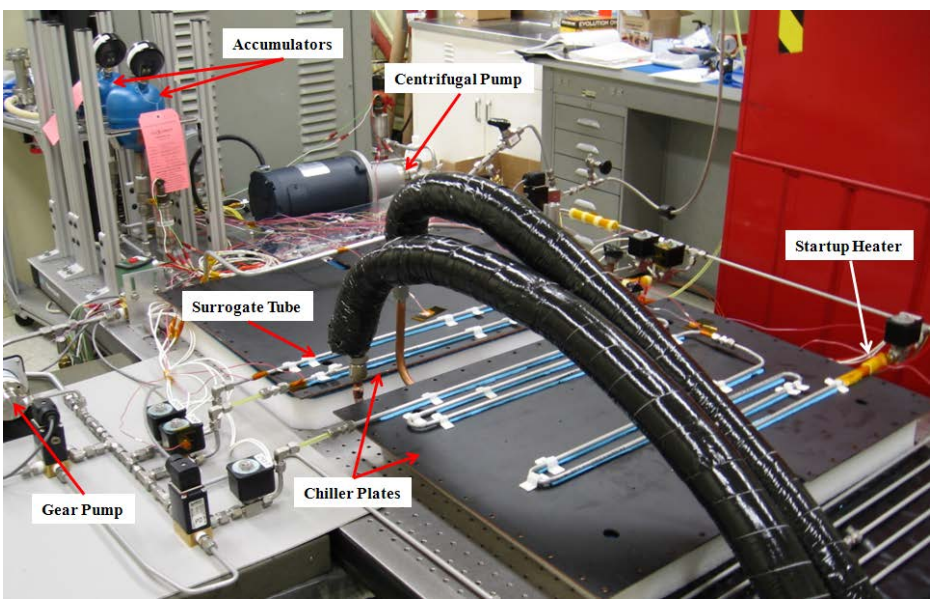

Figure 8. Bench-top test article.

The test for returning the leg to the flow path was conducted by opening V-4 and V-7. If the drain process were successful, the small amount of remnant fluid would not have formed an ice plug. However, immediate restart of the leg was not obtained due to blockage.

To gain visibility into the tube during evacuation, the aluminum tube was replaced with a clear one. Upon repeating the test, it was found that a significant portion of the fluid was not drained. The volume of fluid being heated resulted in an insufficient amount of vapor to displace the fluid to the gear pump. The driving pressure of the vapor fell to that of the rest of the tube and random boiling started to occur.

Two possible solutions were considered. One was to implement a startup heater in the form of a spiral wrap line heater which extends further downstream on the tube. The heater would have a built in gradient such that more heat is applied upstream and decreases as it wraps along the tube. The other option was to heat a larger volume of fluid

that was thermally isolated from the rest of the line. This option was tested by implementing a stub branch off of the leg, and results were much more promising as more of the fluid was successfully evacuated.

Bench-top testing for Option 5: Freezable leg with surrogate tube

Testing was done to simulate the turn-down by closing V-6 and allowing Leg 1 to freeze. V-6 was later opened to verify no flow. Turn-up was then achieved by allowing flow through the ALTLEG, which was previously evacuated. After a few minutes, Leg 1 began to thaw and a long slug of frozen mass was seen to pass by the sight glass SG-1.

VI. Digital Radiator Point Design for Altair

A point design was generated based on previous trade studies and testing. The purpose is to obtain an estimate of system resources required for a full-scale radiator implementation for Altair. The startup heater option was selected for the turn-down technology. And three way latching valve were chosen in order to allow flow through the radiator to occur concurrently with tube evacuation. This enables the design to maintain exit fluid set-point temperature. Figure 9 is a schematic of the notional point design.

As an example of how it may operate, a turn-down scenario for Tube 5 would proceed as follows:

1. flight software begins the sequence for turn-down;
2. valve LV5 and LV5' are both closed;
3. the startup heater near LV5 is powered on;
4. LV5' is set to redirect flow to the Evacuation Pump and the Evacuation Pump is activated;
5. the startup heater is powered off;
6. after TBD seconds, the Evacuation Pump is powered off and LV5' is closed.

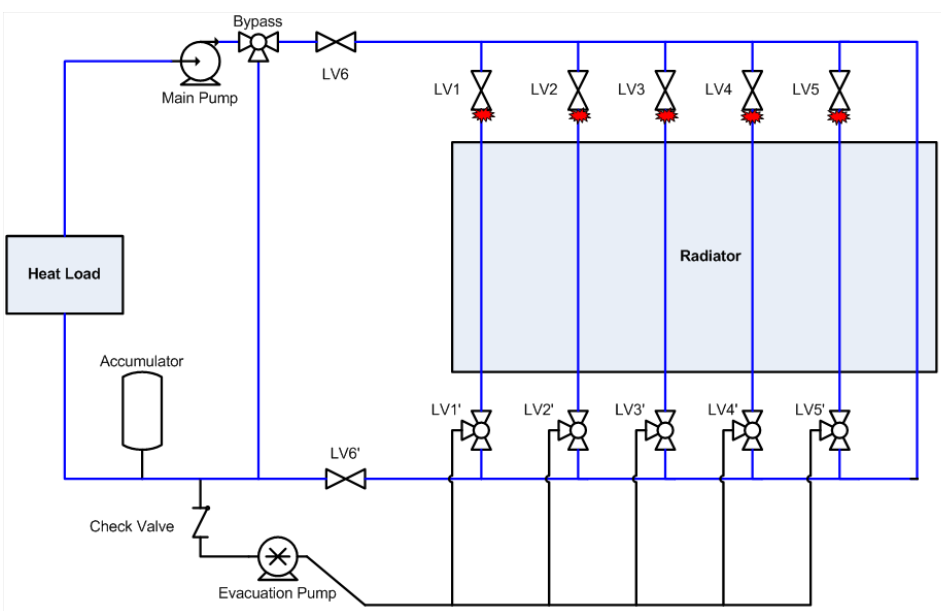

Figure 9. Selected point design with a startup heater used to assist in leg evacuation and 3-way latch valves to permit concurrent flow through the radiator during evacuation.

Note that it is important to minimize the time spent on Step 2, above, because the fluid in Leg 5 is stagnant during this time. Work is needed to optimize the method of directing heat into a controlled volume of fluid. Also, more testing is needed to determine the effect of turn-up when the legs between the Evacuation Pump and three-way latch valves contain vapor.

Work was done to adapt the notional point design into the full-scale Altair radiator. In order to reject the required waste heat on the lunar surface, multiple radiator panels are required. The current baseline from the Altair design team is for a total of four radiator panels mounted equally around the Altair body. The Altair body is currently envisioned to be an octagon[4] and radiator placement is limited to four of the panels. The maximum size of each radiator panel is limited to 3.75m x 2m. Each of the four radiators will have specific sink temperatures depending on the mission phase (average sink temperatures are given in Figure 1). Figure 10 is an artist concept of Altair still attached to the Ares V Earth departure stage.

The radiators were sized based on worst case hot conditions on the lunar surface where heat rejection requirements were also at a maximum: average equivalent sink temperature of 210K and 6040W of dissipation to be rejected. The primary design driver from a resource utilization perspective is the need to minimize mass. This dictates tube sizes, tube spacing, and groupings into tube sets to minimize latch valves. Other considerations are the pressure loss through the radiators, parallel or series flow through the radiators, and a desire to minimize the amount of fluid which needs to be drained from a turned-down tube set.

The full-scale radiator design and analysis effort utilized the Thermal Desktop, Sinda/Fluint, FloCAD thermal analysis tool set[5]. Effective sink temperatures were assigned to each of the four radiator panels. A lumped parameter, finite difference model of the radiator was constructed. At this time, representative routing for plumbing, such as a manifold design, is not being modeled.

Figure 10. Artist concept of the Altair ascent stage (foreground), descent stage, and Ares V earth departure stage.[6]

The sizing case for the radiators is during lunar surface operations where about 6 kW needs to be rejected to an overall effective sink temperature of about 210K. Based on these boundary conditions, the radiator was sized as 4 panels, each measuring 3.75m x 2m. The required peak mass flow rate is 0.06 kg/s and is considered constant throughout the mission due to a desire to run the main circulation pump at constant speed. This configuration is capable of cooling incoming fluid at 313K down to 283K and rejecting 6.1 kW with no fluid bypassed while on the lunar surface. Other mission phases will require some combination of radiator turn-down and bypass to meet heat rejection requirements while maintaining exit fluid temperature at the set-point of 10 ^{o}C. Also considered was the desire to minimize mass by grouping tube sets so as to minimize the number of latch valves. The point design consists of 3 tube sets per radiator panel. Each tube set consists of a pair of latch valves and a given number of tubes with startup heaters. The number of tubes per tube set is determined by using the thermal model to calculate heat rejection rates based on radiator effectiveness and mass flow rate. The configuration settled upon consists of each radiator panel having the following tube set distribution: Tube set 1 = 7 tubes; Tube set 2 = 2 tubes; Tube set 3 = 3 tubes.

Figure 13 summarizes the thermal model results and turn-down configurations for each phase of the mission. Figure 13a shows that for low Earth orbit, three of the panels are shut down. Only Panel 1, shown at the left, has two of its tube sets open to the flow with the full 0.06 kg/s mass flow rate through them. Note that the temperatures of the turned-down panels are not identical due to slightly different sink temperatures. Figure 13b shows that for trans-lunar coast, the lower sink temperature and heat rejection requirement results in the need for a turn-down of one of the two open tube sets as well as a bypass of 86% of the total mass flow rate. From this stage of the mission onward, the radiator requires turn-up in stages. Just prior to entering low lunar orbit, Altair initiates partial operations and the heat rejection requirement jumps from 936 W to 3535 W. This requires that all valves on Panels 1 and 2 are opened with about 43% of the mass flow bypassed. Low lunar orbit requires a third panel to be turned-up due to the need to reject 4800 W to a higher sink temperature. And finally on the lunar surface with maximum waste heat dissipation needs and sink temperatures, all radiators are open to flow with no fluid bypassed.

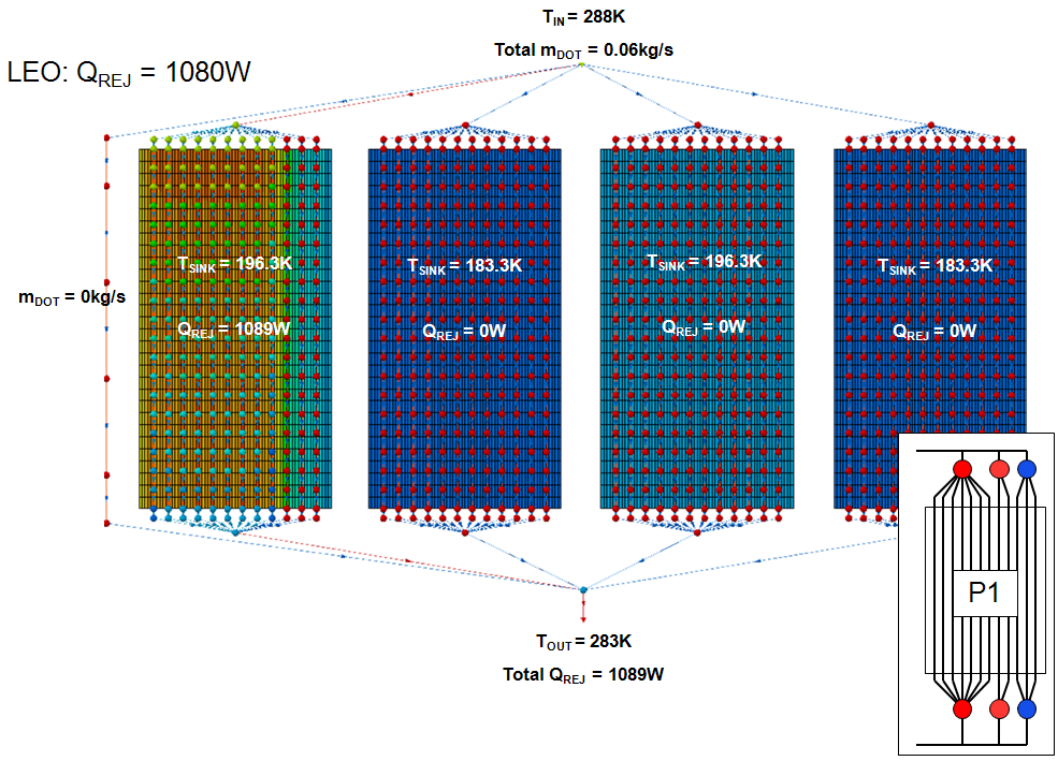

Figure 13a. Digital Radiator configuration during low Earth orbit.

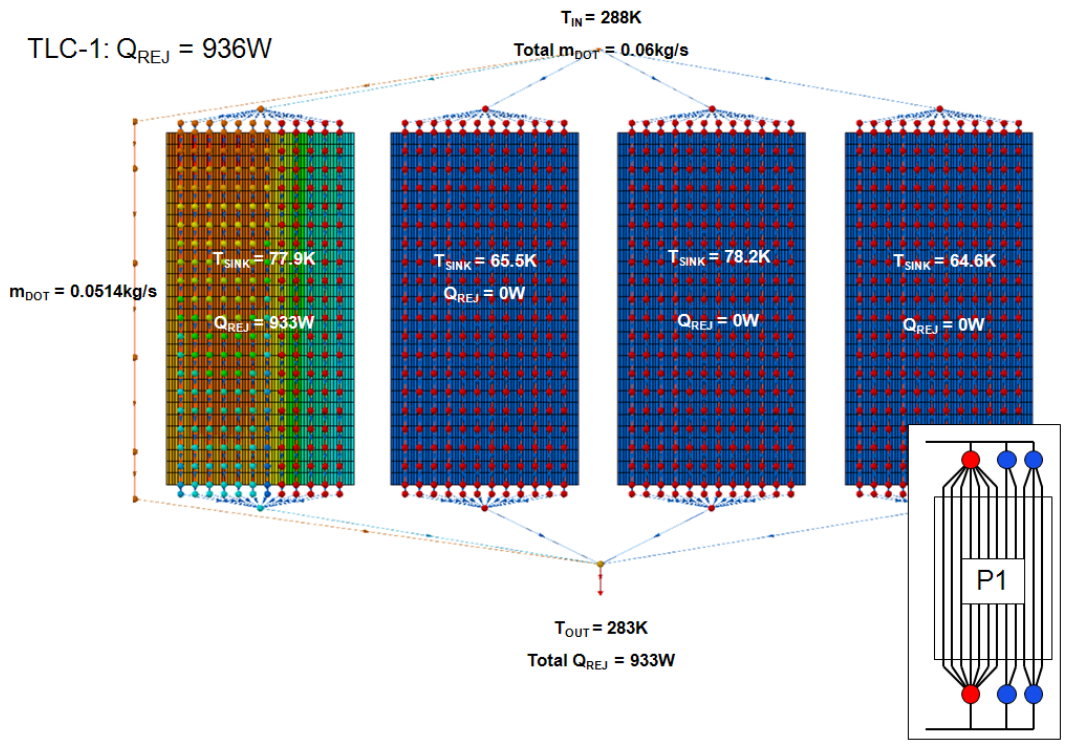

Figure 13b. Digital Radiator configuration during trans-lunar cruise.

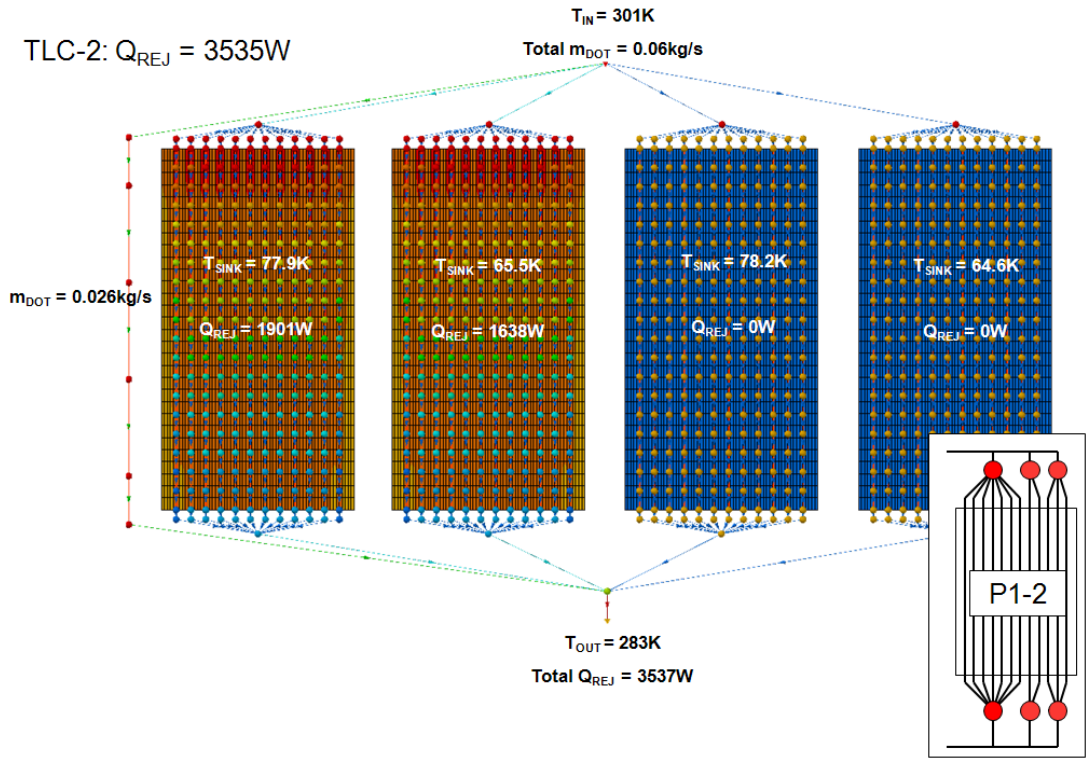

Figure 13c. Digital Radiator configuration prior to low lunar orbit.

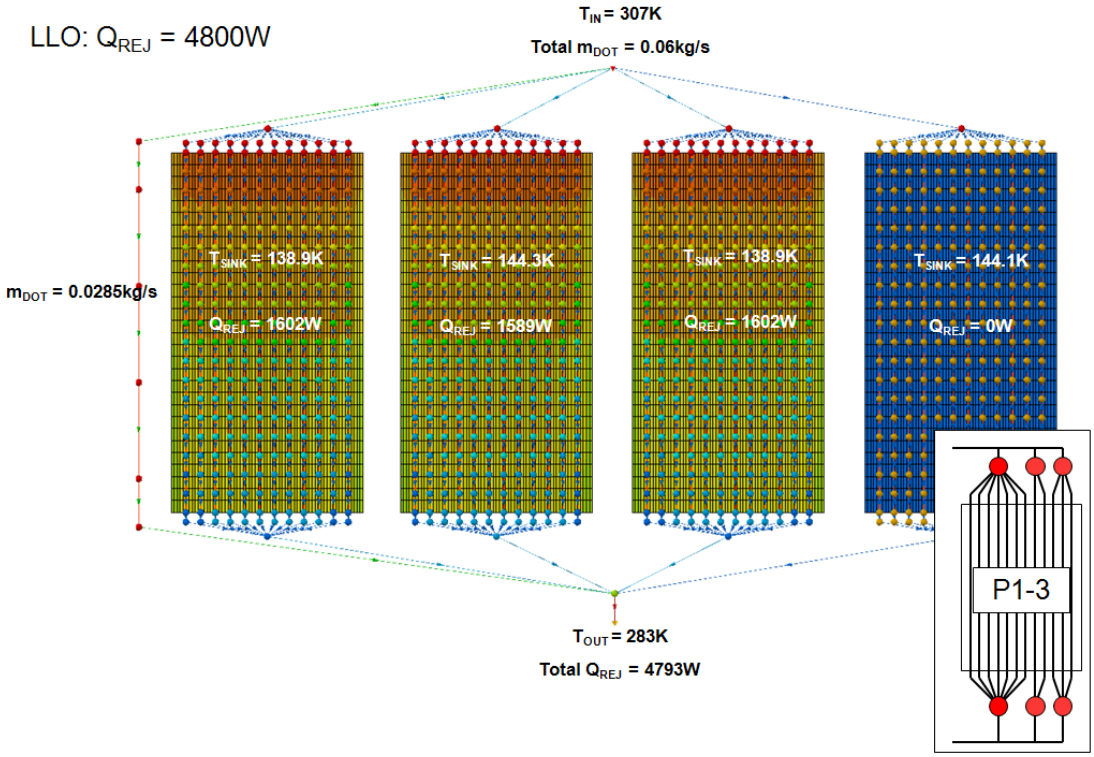

Figure 13d. Digital Radiator configuration during low lunar orbit.

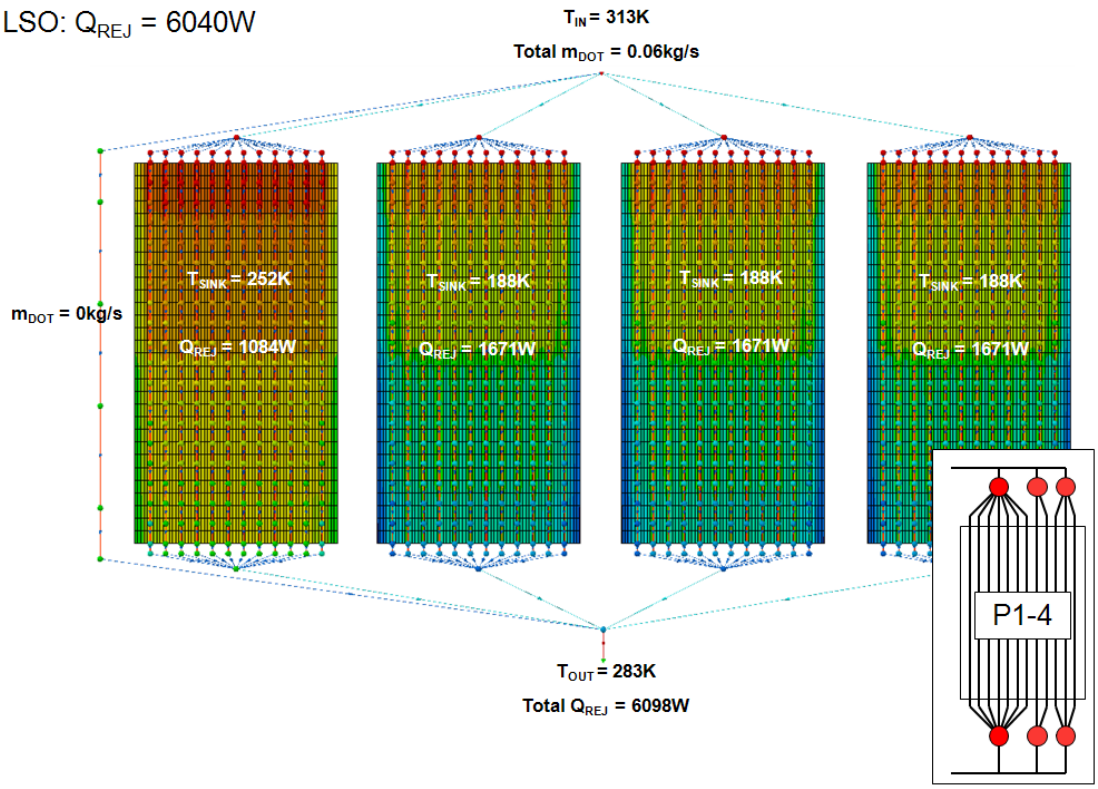

Figure 13e. Digital Radiator configuration during lunar surface operations.

VII. Conclusion

Different methods to turn-down and drain a leg of the Digital Radiator were tested. Results indicate that injection of a pressurant gas or the use of a start-up heater can result in more than 95% of the fluid evacuated. But at this time, the higher mass and possible issues with dissolved CO_2 in the working fluid favor the start-up heater solution. A full-scale, conceptual point design for the Altair mission profile was then generated. This configuration includes start-up heaters and a gear pump for tube evacuation. It also includes three-way latch valves at the exit of each tube set with a manifold to the gear pump. This allows flow through the radiators to occur concurrently with the turn-down process and is essential to holding exit temperature set-point.

There has been no insurmountable design issues with the Digital Radiator concept discovered thus far. But development work is needed in several areas:

- manifold design and pressure drop estimates across the entire radiator;
- optimization of the start-up heater configuration;
- demonstration of evacuating several parallel tubes concurrently;
- fluid freeze risks associated with remnant fluid and vapor;
- evacuation pump reliability;
- 3-way latch valve development.

The Digital Radiator has the potential to provide significant savings in system resources on future spacecraft. The trend in spacecraft development is toward ever higher power levels and waste heat rejection requirements. This will drive radiator sizes higher, as well as the heater power required to satisfy cold case conditions and survival modes. Pumped fluid loops are likely to be implemented on more spacecraft as a result. This has the benefit of driving down system mass because of the high fin effectiveness to radiator mass ratio associated with flow tubes. And active turn-down methods may be employed to save large amounts of operational and survival heater power. Some level of turn-down can be achieved by bypass flow techniques, but there are limits based on the working fluid and the level of variation in the mission's thermal environments. Other turn-down techniques such as louvers, heat

switches, and electrochromics result in significant mass penalties[7]. Stagnating radiator designs can be difficult to characterize and have difficulty achieving turn-up and turn-down quickly. But the Digital Radiator is a scalable, potentially robust method for achieving variable heat rejection. As an integral part of future thermal bus designs, the Digital Radiator can provide versatility to the level of plug-and-play.

Acknowledgments

The development described in this paper was carried out at the Jet Propulsion Laboratory, California Institute of Technology, under a contract with the National Aeronautics and Space Administration. The authors express their thanks to Ronald Reeve, Manager, Spacecraft Propulsion Technology (4132), Space Exploration Technology Program for his support and encouragement for this task. The authors also express their thanks to David Sarraf of Advanced Cooling Technologies, Inc., for his advice on fluid drainage techniques.

References

[1]Ochoa, D. A., Ewert, M., "A Comparison Between One- and Two-Loop ATCS Architectures Proposed for CEV," SAE International Conference on Environmental Systems, 09ICES-0353, July 2009.

[2]Sheth, R., Leimkuehler, T., Stephan, R., "Investigation of Transient Performance for a Sublimator," AIAA International Conference on Environmentl Systems, July 2010.

[3]Ganapathi, G. B., Sunada, E. T., Birur, G. C., Miller, J. R., Stephan, R., "Design Description and Initial Characterization Testing of an Active Heat Rejection Radiator with Digital turn-down Capability," SAE International Conference on Environmental Systems, 2009-01-2419, July 2009.

[4]Stephan, R., "Overview of the Altair Lunar Lander Thermal Control System Design," AIAA International Conference on Environmental Systems, July 2010).

[5]Thermal Desktop, Cullimore and Ring Technologies, Inc., Software Package, Ver. 5.2, Boulder, CO.

[6]URL: http://www.nasa.gov/mission_pages/constellation/altair/index.html .

[7]Sunada, E., Conference Presentation "Design Description and Initial Characterization Testing of an Active Heat Rejection Radiator with Digital turn-down Capability" SAE International Conference on Environmental Systems, July 2009 (unpublished).

[8]Iacomini, C., Linrud, C., Dang, J., Bailey, C., and Anderson, G., "Tube Stagnation Experiments and Modeling Using a Safe, Non-Corrosive Dielectric Fluid for Radiator Thermal Control Systems Near Stagnation Regimes," SAE International Conference on Environmental Systems, 08ICES-0228, July 2008.

[9]Birur, G. C., Bhandari, P., "Mars Pathfinder Active Heat Rejection System: Successful Flight Demonstration of a Mechanically Pumped Cooling Loop," SAE International Conference on Environmental Systems, 981684, 1997.