Slocum-TREC Thermal Glider

PI: Terry Huntsberger
Mechanical: Jack A. Jones
Power: Thomas Valdez

Program Manager: Rob Stirbl

Jet Propulsion Laboratory
California Institute of Technology

January 31, 2012

SOLO-TREC Thermal Profiling Float Status & Slocum-TREC Thermal Glider Status

JPL/Scripps Thermal Powered Float (2008-2011)

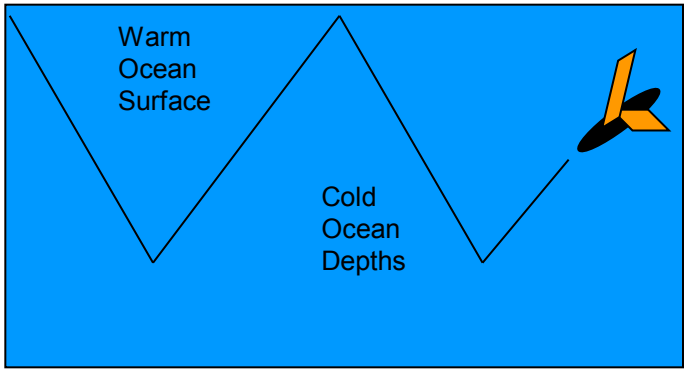

Webb/JPL Thermal Gliders (2012-2014)

2008-2014 Objectives:

- Demonstrate a thermally powered float that uses an electrical charging process in an ocean endurance test : SOLO-TREC (November 30, 2009 to June 11, 2011).
- Perform design, testing, and deployment for up to two thermal powered gliders that will endure at least one year of testing in the Atlantic and/or Pacific Ocean: Slocum-TREC (2012-2014).

Key Achievement:

- Float deployed and operational for 18 months (original 3 month goal)
- First UUV powered by the environmental temperature differences in the ocean

Principal Investigators:

- Yi Chao, Terry Huntsberger, Jack Jones, Thomas Valdez, JPL, Caltech
- Russ Davis, Scripps Institution of Oceanography, UCSD (SOLO-TREC)
- Doug Webb, Teledyne-Webb-Research (Slocum-TREC).

Approach:

- Design and test a modified Scripps Argo float that will use ocean temperature differences and phase change material (PCM) to produce 1.6 w-hrs of energy/dive
- Design and test a modified Webb Slocum glider that will use ocean temperature differences and PCM to produce both buoyancy ***plus*** 2.5 w-hrs of energy/dive (30% margin).

Mission Control via Google Earth

Initial surfacing occurred on November 30, 2009. The float continued to dive flawlessly about 3 times per day (6100 Joules/dive) until September 7, 2010. At that time, a defective battery shorted in one of the two battery packs, and SOLO-TREC began charging only every other cycle. To extend battery life, SOLO-TREC was told to surface once every ten days, with intermittent charge capability even further reduced by low voltage. The mission was terminated in June, 2011 with recovery of SOLO-TREC on June 11, 2011.

Solo-TREC Science Data

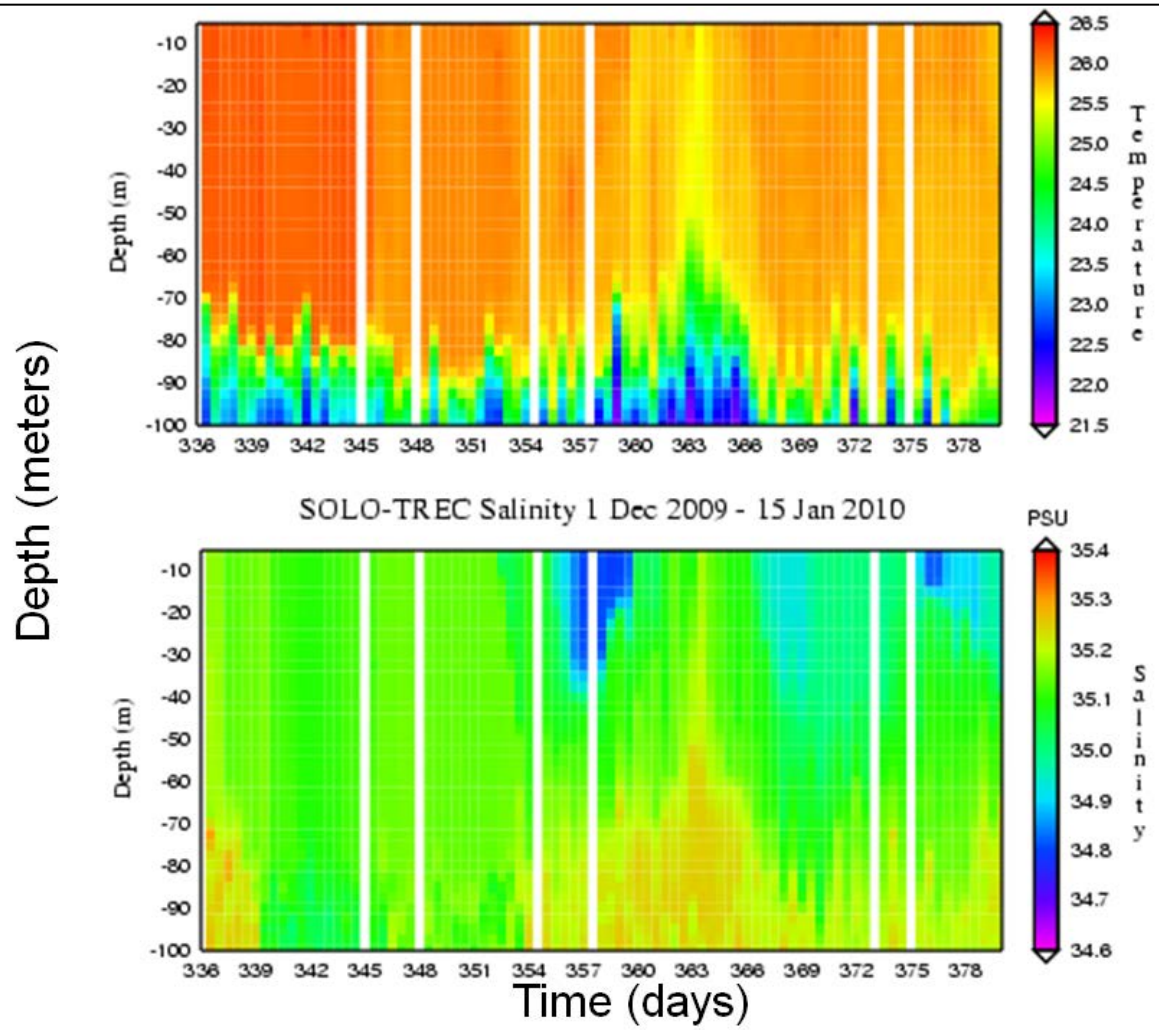

Copyright 2012 California Institute of Technology.
Government sponsorship acknowledged.

Slocum-TREC Glider
- Present Activity -

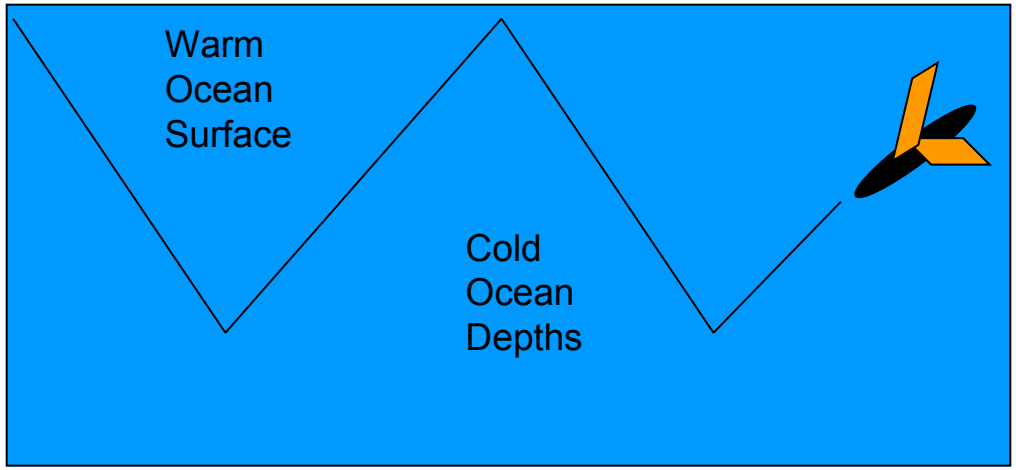

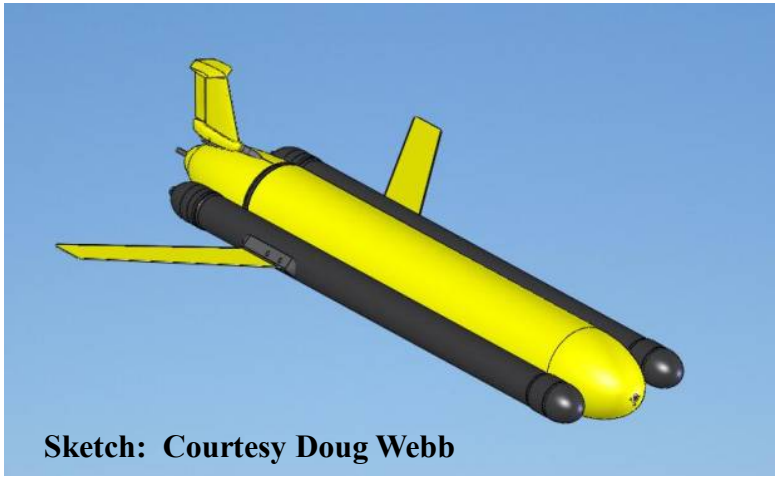
Sketch: Courtesy Doug Webb

- JPL is now teaming with Teledyne-Webb-Research to produce the first thermal glider that uses PCM for direct buoyancy control (not electronic pumps) and to produce all other required electricity.
- TWR has increased electrical production total efficiency from 0.45 to 0.61.
- JPL performed over 6000 cycles (2.4 years) of accelerated life testing of a piston accumulator.
- Design, fabrication, and testing will be performed in 2012, with deployment by Rutgers University in late 2012.
- The proposed goal of the ocean endurance tests was 3 months, but will be extended to at last 1 year.

Copyright 2012 California Institute of Technology.
Government sponsorship acknowledged.

Thermal Glider Schematic

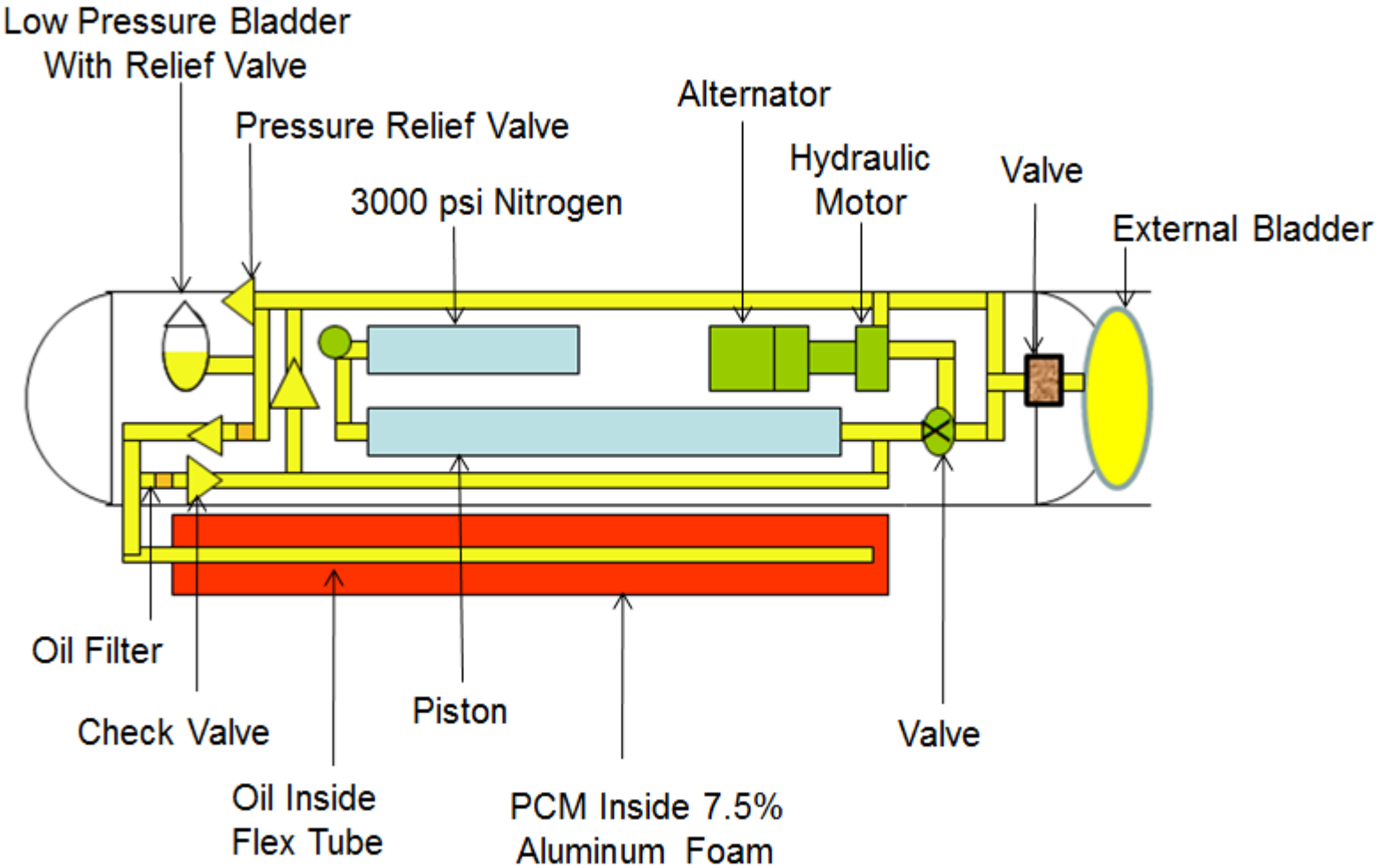

Copyright 2012 California Institute of Technology.
Government sponsorship acknowledged.

Accelerated Piston Accumulator Life Test

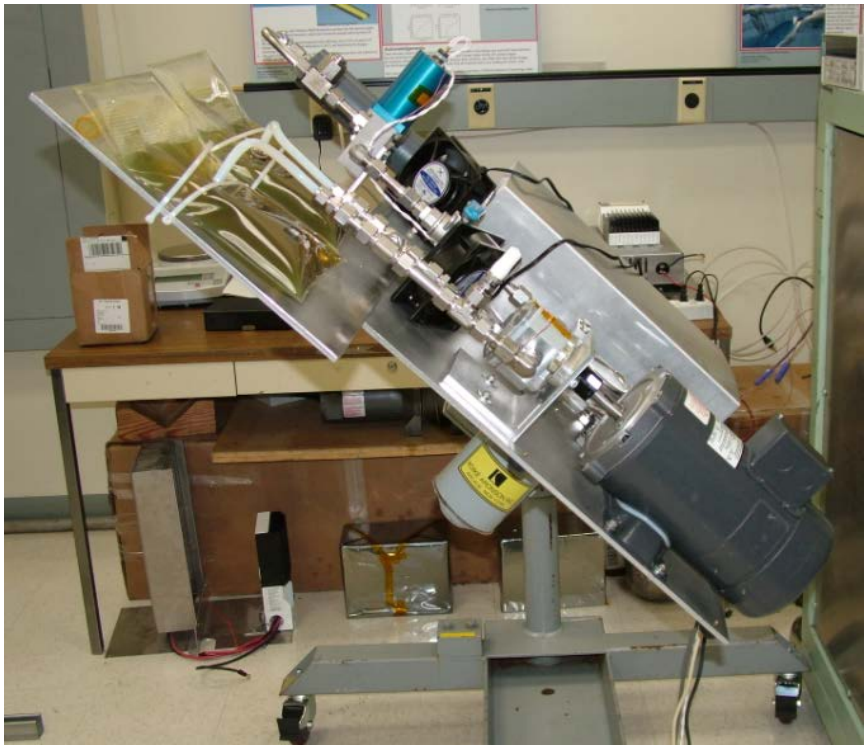

- **The piston accumulator was cycled over 6,000 times in a three-month period in order to simulate continuous glider life of about 2.4 years.**
- **The life test data suggests that we might accumulate roughly 0.5 cc of gas in the oil bladders for each cycle.**
- **If this is true, this may be alleviated by using a vented oil bladder, which is under test at TWR.**

Copyright 2012 California Institute of Technology.
Government sponsorship acknowledged.

PCM Freeze Times with Aluminum Foam

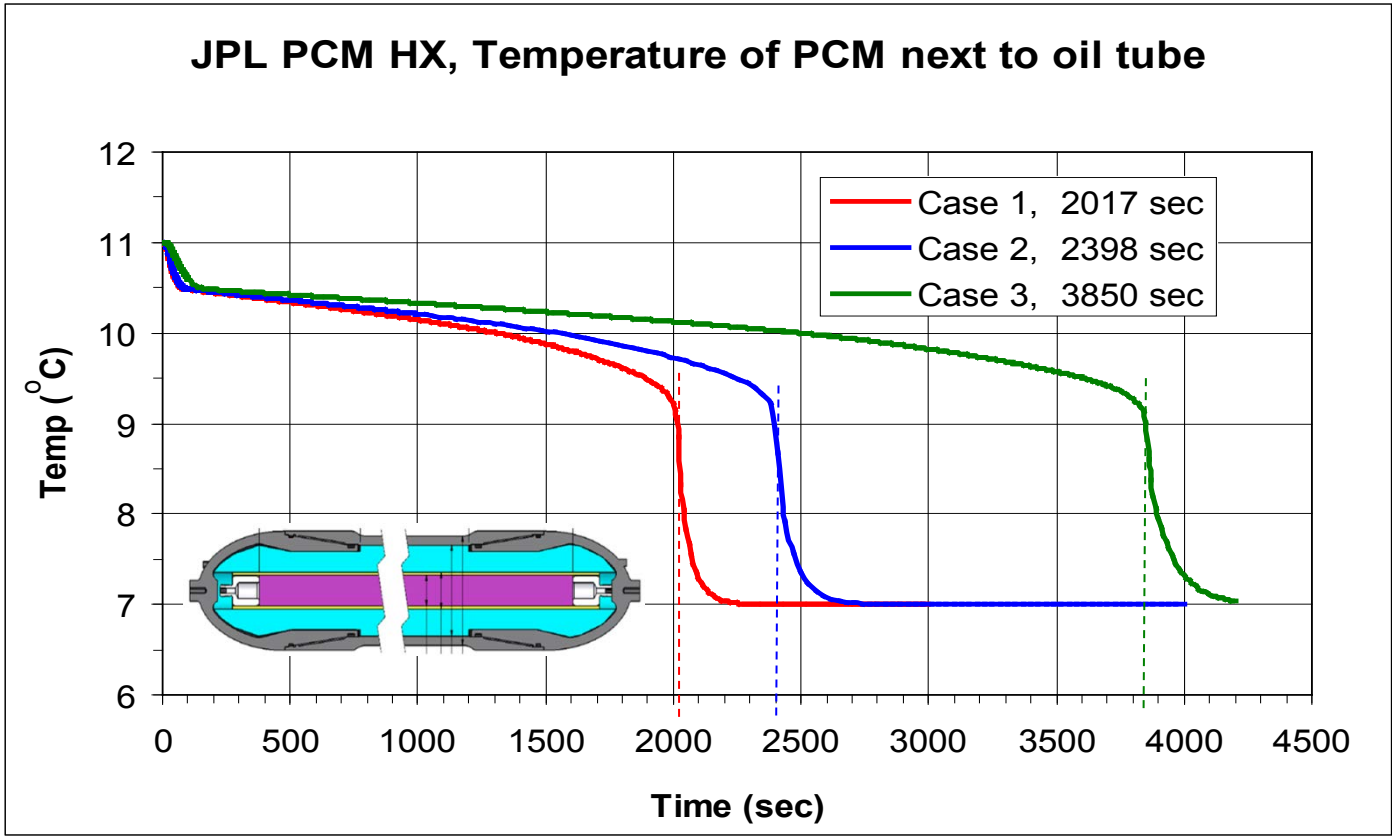

- **A compressed aluminum foam core will much more rapidly heat and cool the PCM.**
- **PCM freeze times for 10% aluminum foam with direct contact (Case 1), 10% foam with 0.003" gap (Case 2), and 5% foam with direct contact (Case 3). 7.5% foam selected.**

Copyright 2012 California Institute of Technology.
Government sponsorship acknowledged.

Thermal Engine Energy Storage Systems

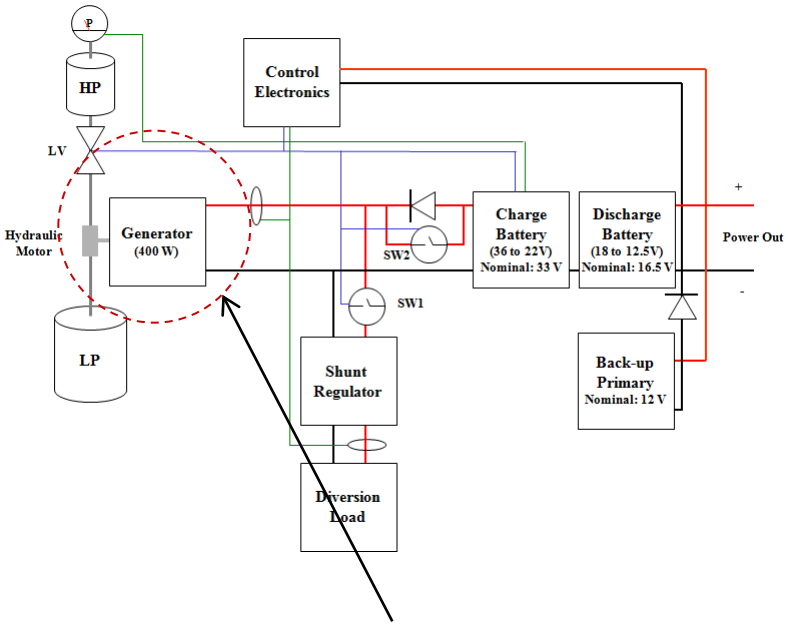

Solo-TREC

- 400 Watt Generator
- Charged at high voltage (36V) to maximize system efficiency

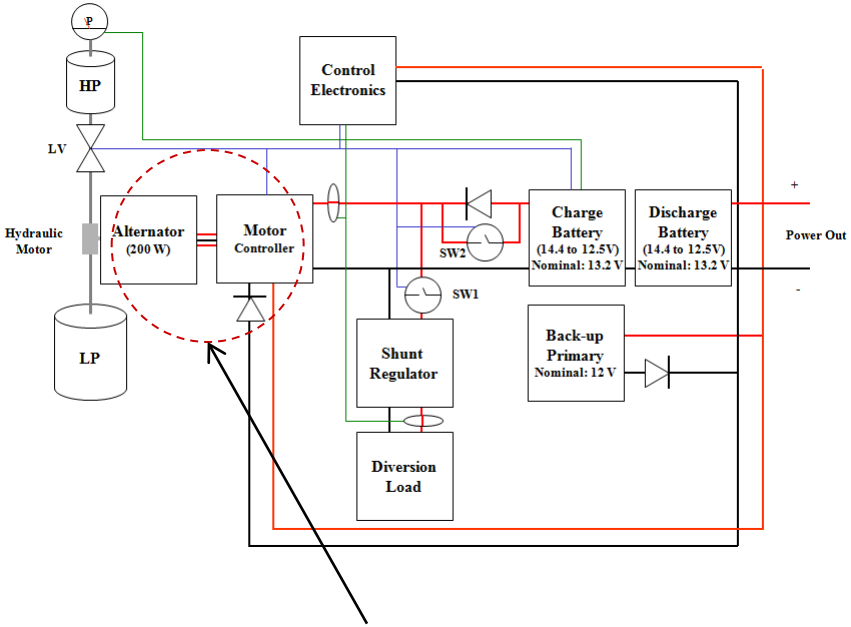

Slocum-TREC

- 200 Watt Alternator
- Alternator can be powered to recharge the high pressure accumulator
- Dual batteries are used to eliminate any electrical noise resulting from power generation

Copyright 2012 California Institute of Technology.
Government sponsorship acknowledged.

Slocum-TREC Energy Storage Functional System Schematic

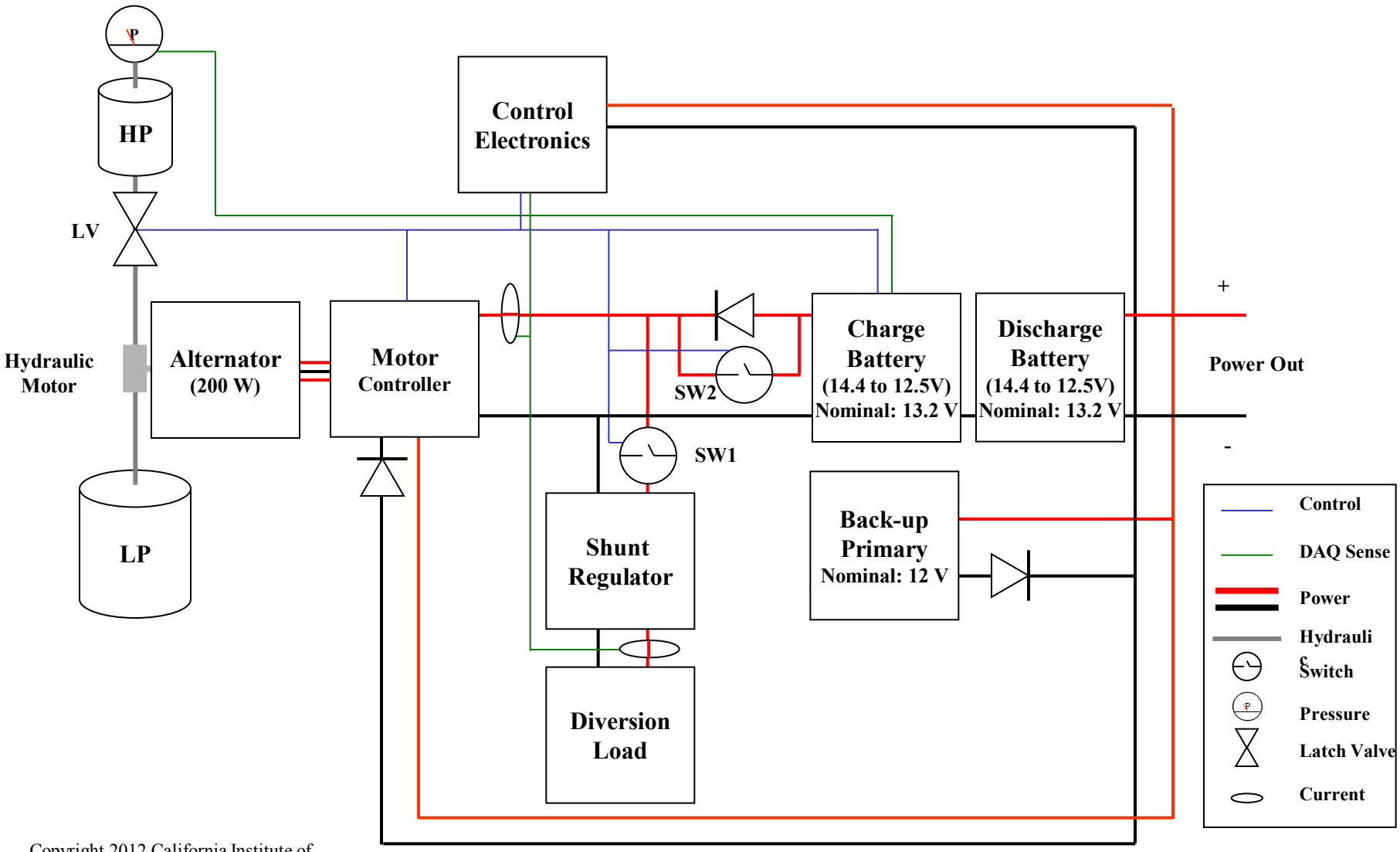

Copyright 2012 California Institute of Technology. Government sponsorship acknowledged.

Control Logic Outline

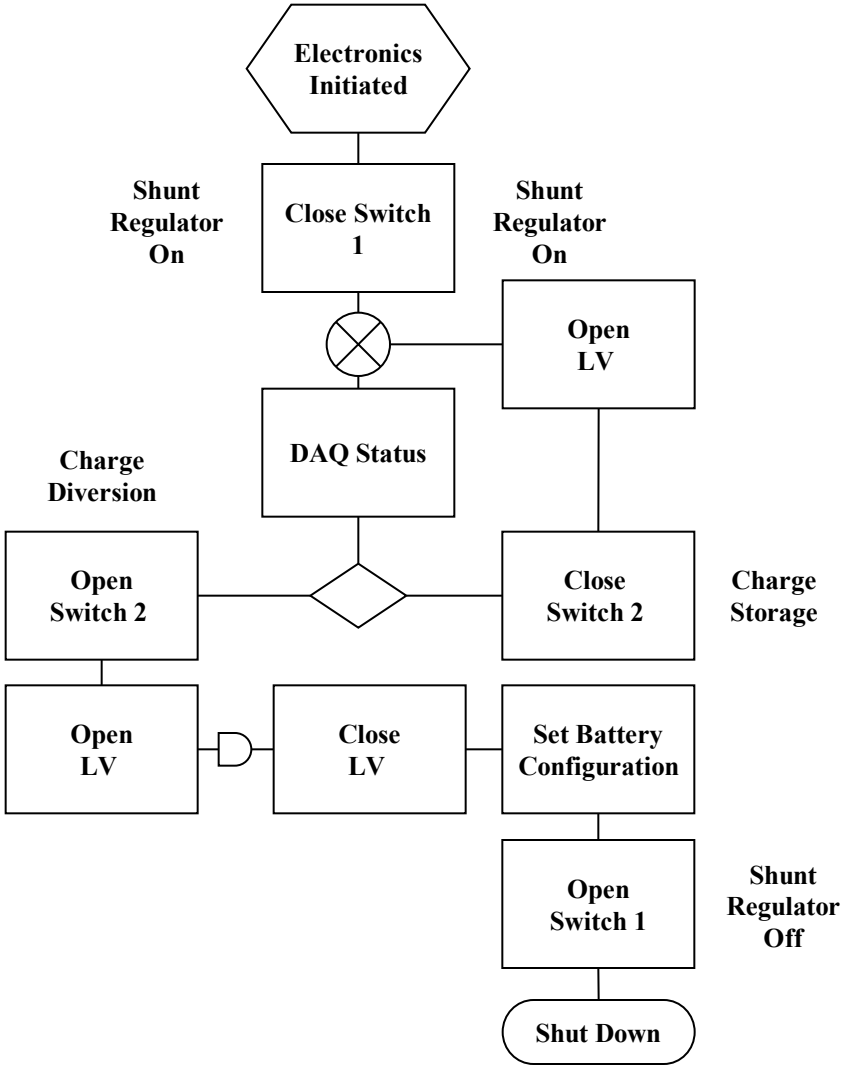

- Electronics to be initiated a minimum of 15 seconds prior to pressure discharge
- DAQ Status (1 Hz)
  - Charge Pressure
  - Cell voltages
  - Alternator Current
  - Diversion Load Current
- Latch Valve (LV) closed when current drops to 0 Amps

Copyright 2012 California Institute of Technology.
Government sponsorship acknowledged.

Energy Storage Control

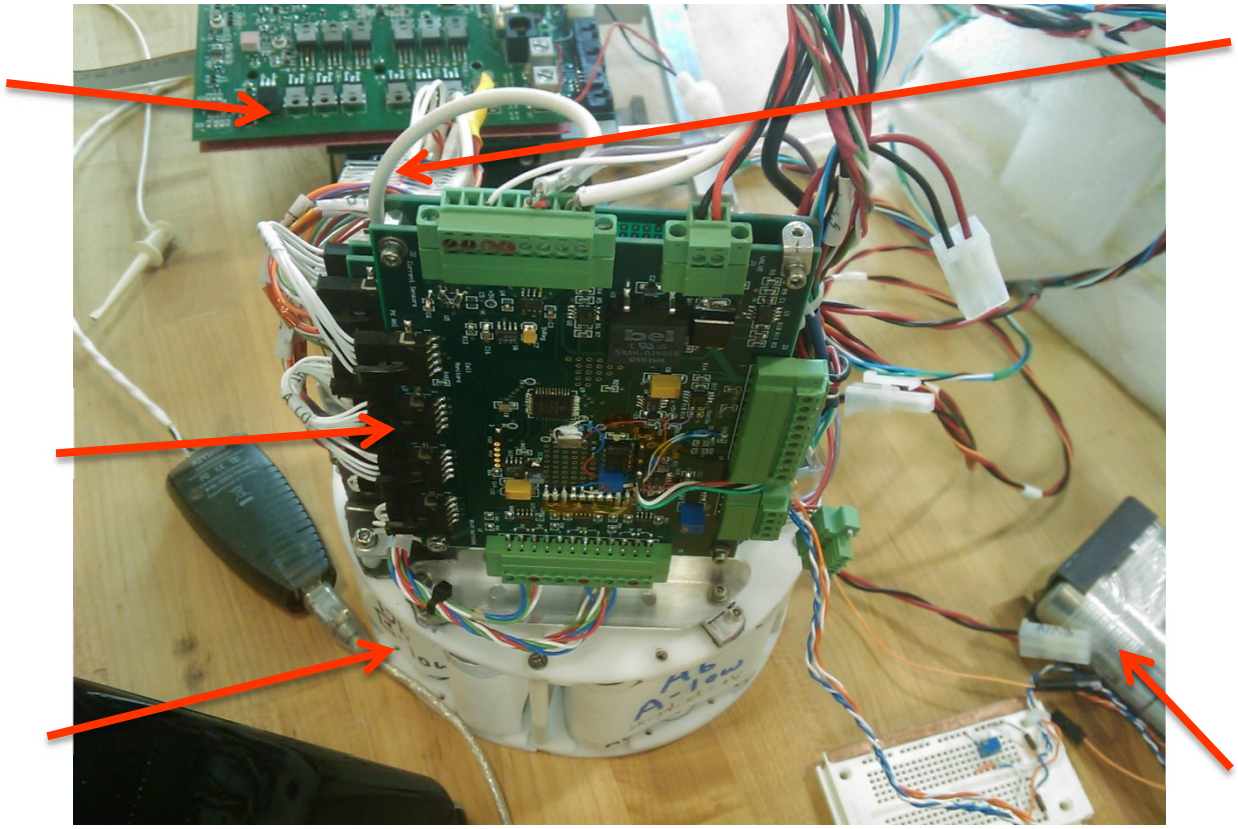

Copyright 2012 California Institute of Technology.
Government sponsorship acknowledged.

Energy Storage: Battery Round Trip Efficiency Characterization

Nominal capacity and voltage	2.3 Ah, 3.3 V
Internal impedance (1kHz AC)	8 mΩ typical
Internal resistance (10A, 1s DC)	10 mΩ typical
Recommended standard charge method	3A to 3.6V CCCV, 45 min
Recommended fast charge current	10A to 3.6V CCCV, 15 min
Max continuous discharge	70A
Pulse discharge at 10 sec	120A
Cycle life at 10C discharge, 100%DOD	Over 1,000 cycles
Recommended charge and cut-off V at 25°C	3.6V to 2V
Recommended charge and cut-off V below 0°C	4.2V to 0.5V
Operating temperature range	-30°C to +60°C
Storage temperature range	-50°C to +60°C
Core cell weight	70 grams

A123 Lithium Iron Phosphate 4-Cell Pack

Copyright 2012 California Institute of Technology.
Government sponsorship acknowledged.

Solo-TREC Generation Cycle Performance

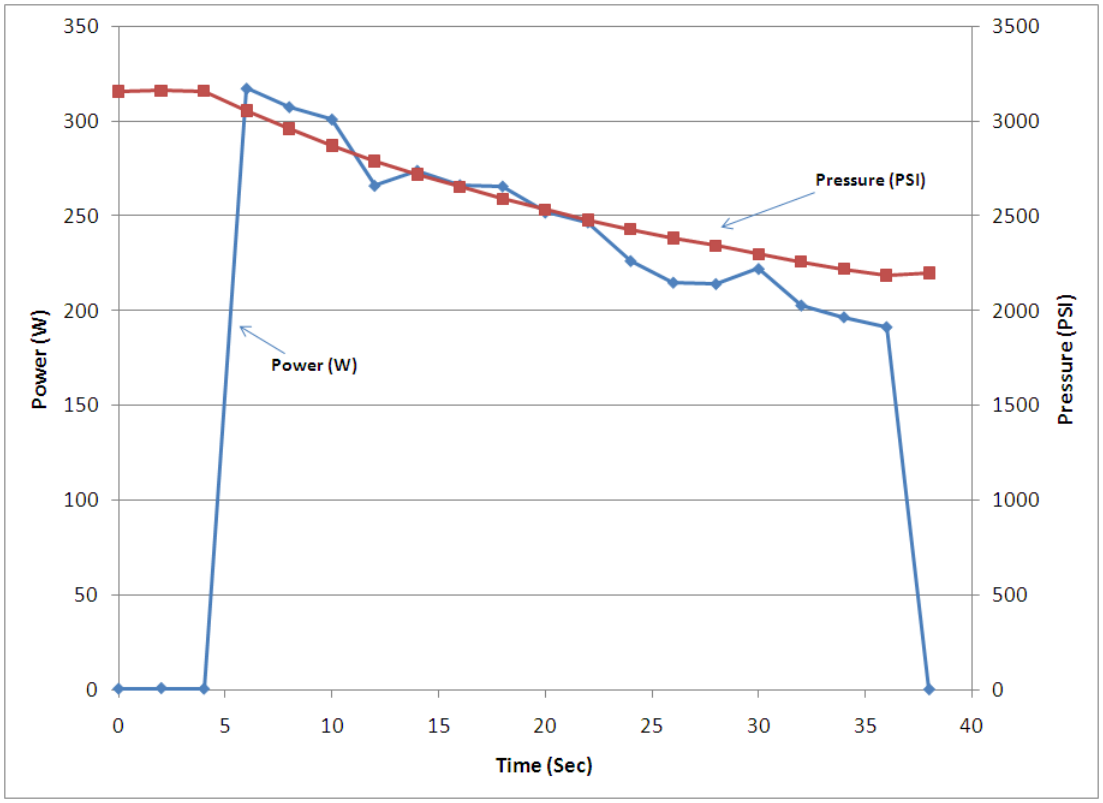

- Max power generated: > 300 Watts
- Up to 2.2 Watt-hours generated per cycle
- Energy storage system efficiency: ~ 45 %

Copyright 2012 California Institute of Technology.
Government sponsorship acknowledged.

Motor Comparisons

Maxon Motor RE65

- DC
- 65 x 65 x 185 mm
- Mass: ~ 2.5kg
- Estimated energy storage system efficiency: ~ 80 %

Axi 5345/18

- 3 Phase AC
- Volume: 63 x 63 x 81 mm
- Mass: ~ 1kg
- Estimated energy storage system efficiency: ~ 61 (maybe ~65 %)

Copyright 2012 California Institute of Technology.
Government sponsorship acknowledged.

Summary

- The piston accumulator was cycled over 6,000 times in a three-month period in order to simulate continuous glider life of about 2.4 years, The life test data suggests that we might accumulate roughly 0.5 cc of gas in the oil bladders for each cycle.
- PCM canisters will be fabricated with a compressed aluminum foam core, 7.5% foam selected (< 42 minutes to freeze anticipated)
- An Axi 5345/18 3-Phase AC alternator selected for power generation, <u>61% energy storage efficiency</u>
- A 4-Cell A123 Energy Storage Systems battery selected for energy storage, buss voltage 14.4 to 12.5 V (13.2 V nominal)
- Glider deployment expected in late 2012.

Copyright 2012 California Institute of Technology.
Government sponsorship acknowledged.