Cassini Mission Short Circuit Anomalies Investigation

30th Annual Space Power Workshop
Manhattan Beach Marriott
Manhattan Beach, CA
April 16-19, 2012

Mr. Gregory Carr, Sr. Systems Engineer, Jet Propulsion Laboratory, California Institute of Technology
Mr. Andrew Ging, Cassini Power System Lead Engineer, Jet Propulsion Laboratory, California Institute of Technology
Mr. Denney Keys, NASA Technical Fellow for Electrical Power Technical Discipline Team (TDT), NASA Engineering and Safety Center (NESC)

This briefing is for status only and does not represent complete engineering data analysis

The Cassini Mission

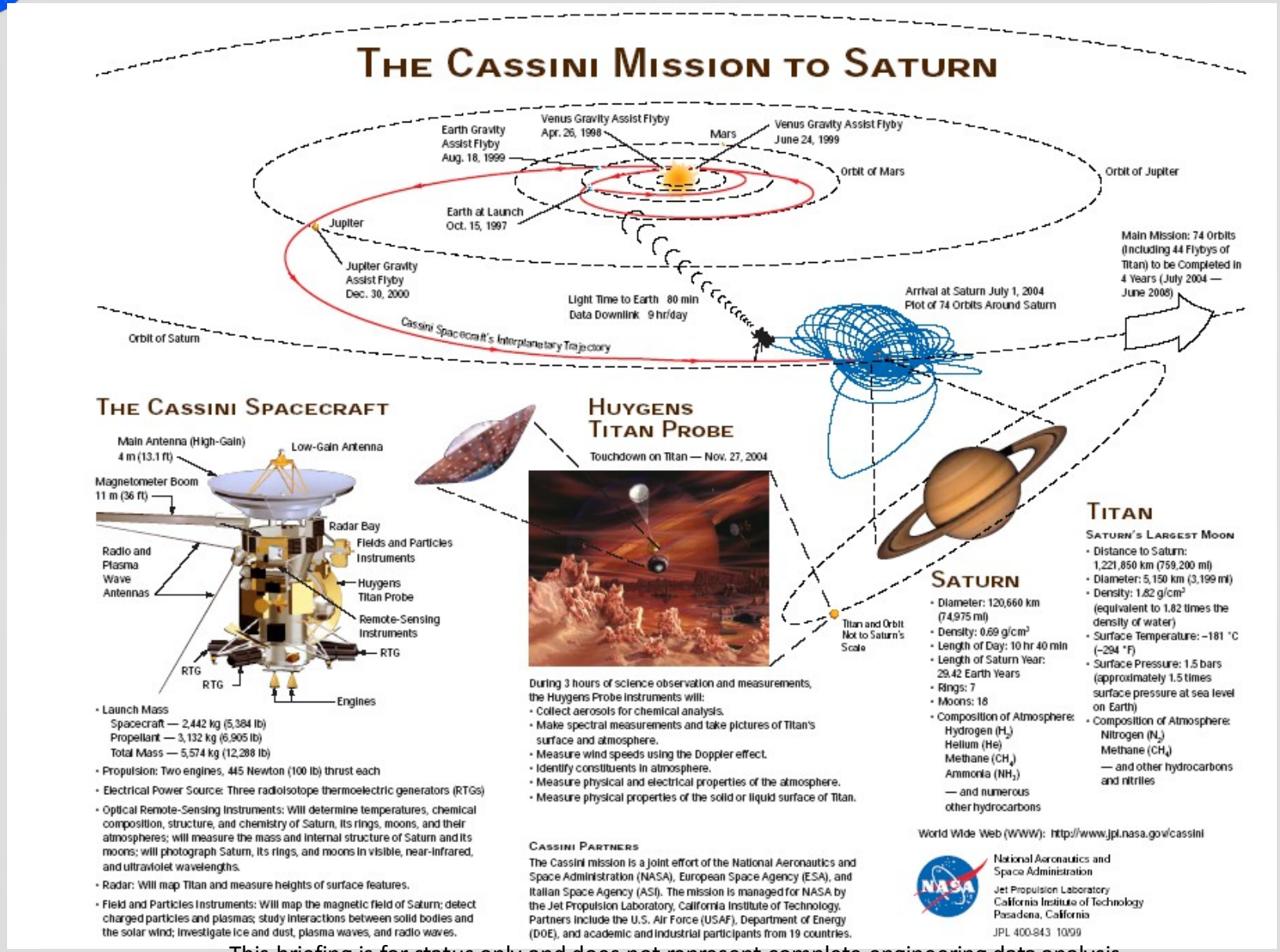

This briefing is for status only and does not represent complete engineering data analysis

Cassini Spacecraft

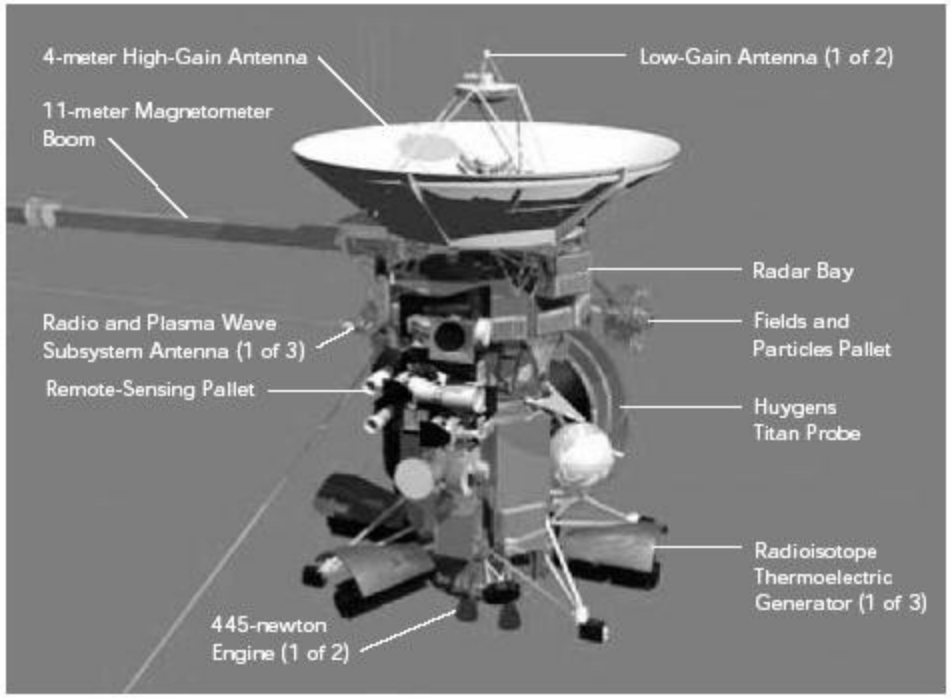

Cassini in the 25-foot Thermal Vacuum Chamber at JPL

Cassini Launch Mass

- Total Mass – 5,574 kg (12,288 lbs)

Power System

- 3 Radioisotope Thermoelectric Generators (RTGs)
- Balanced Chassis, 30 V Bus
- 192 Solid-State Power Switches (SSPSs)

Power System Balanced Bus

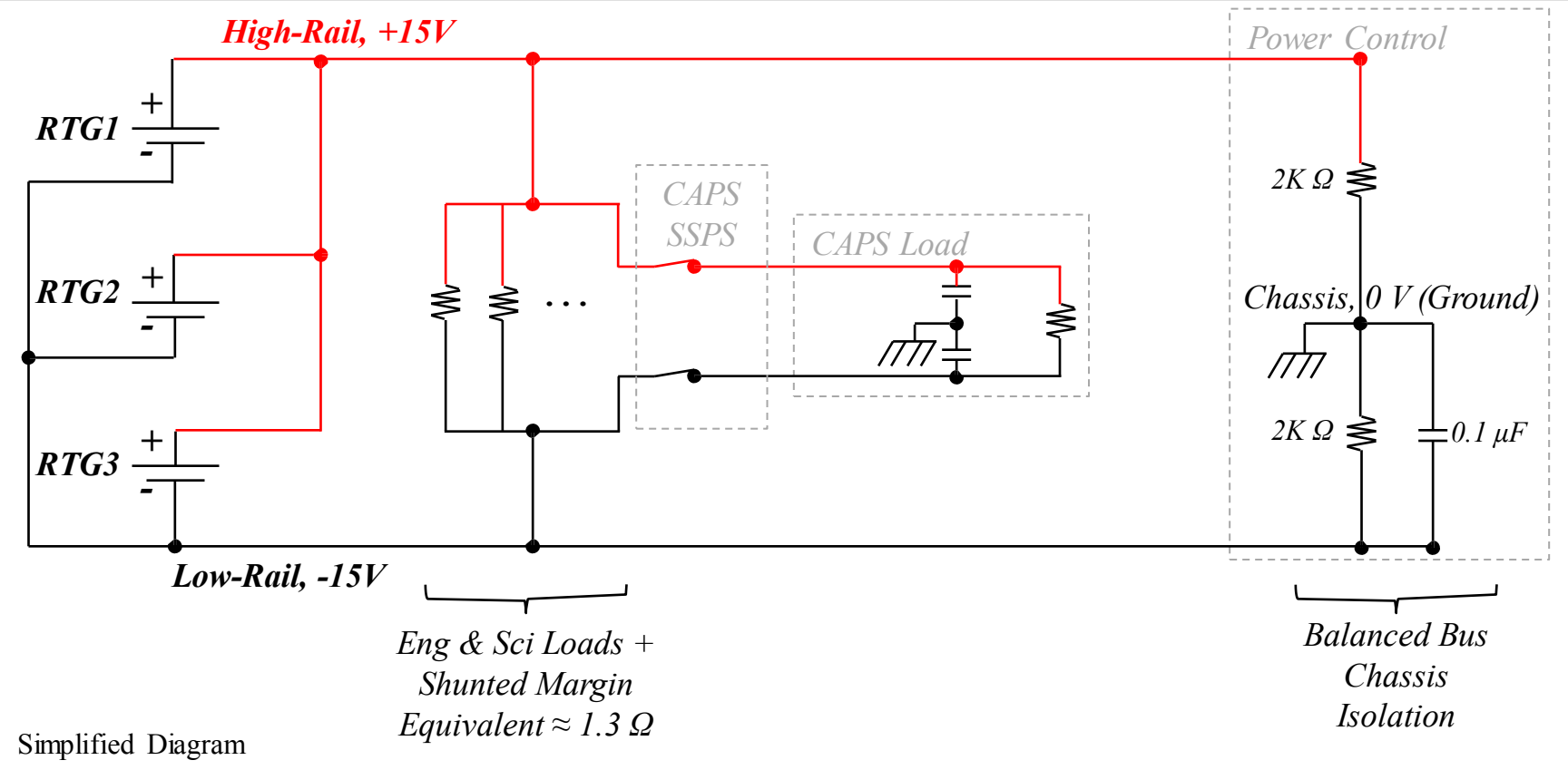

Historical Cassini Bus Performance Timeline and Anomalies

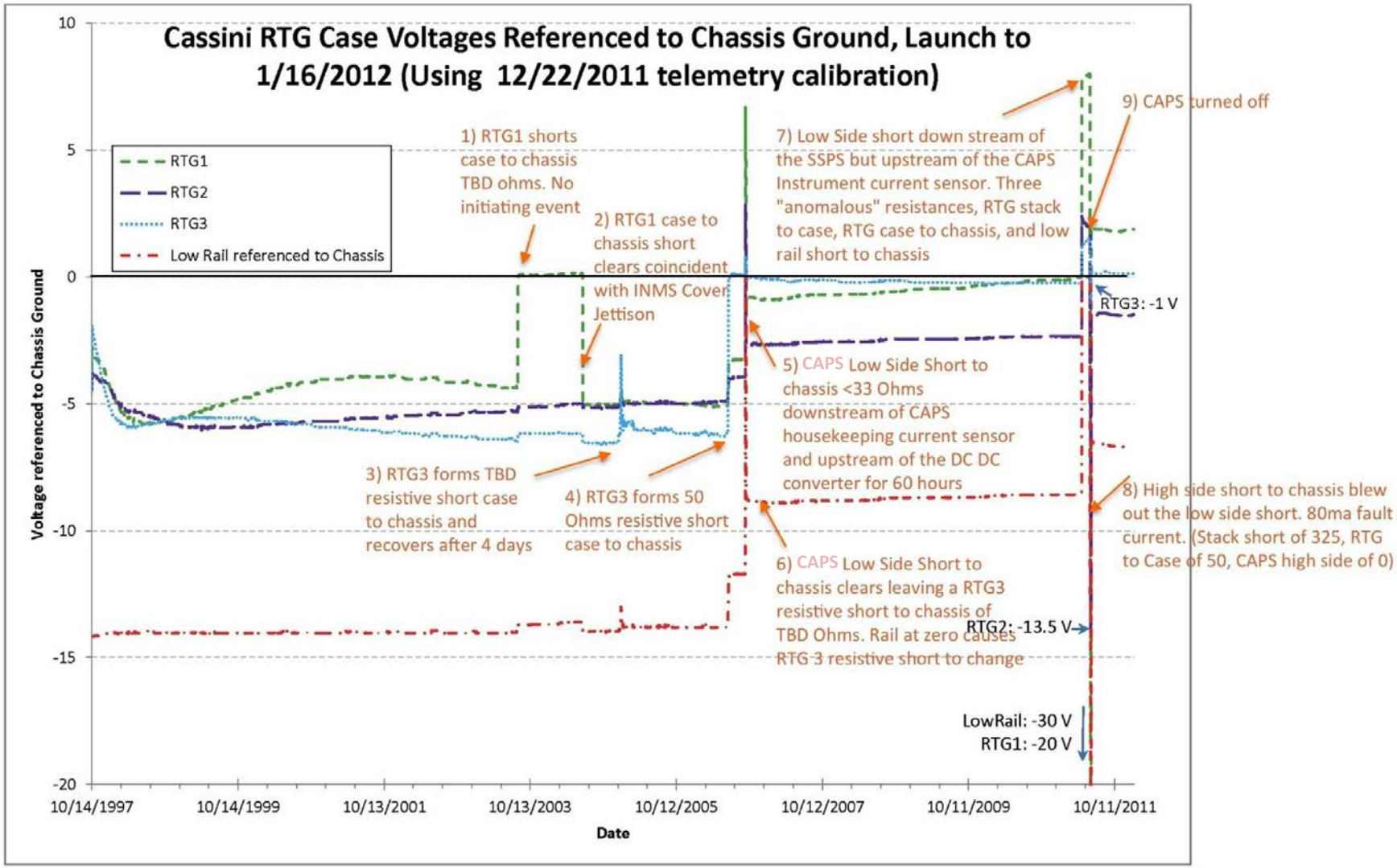

This briefing is for status only and does not represent complete engineering data analysis

Simple Schematic of Affected System

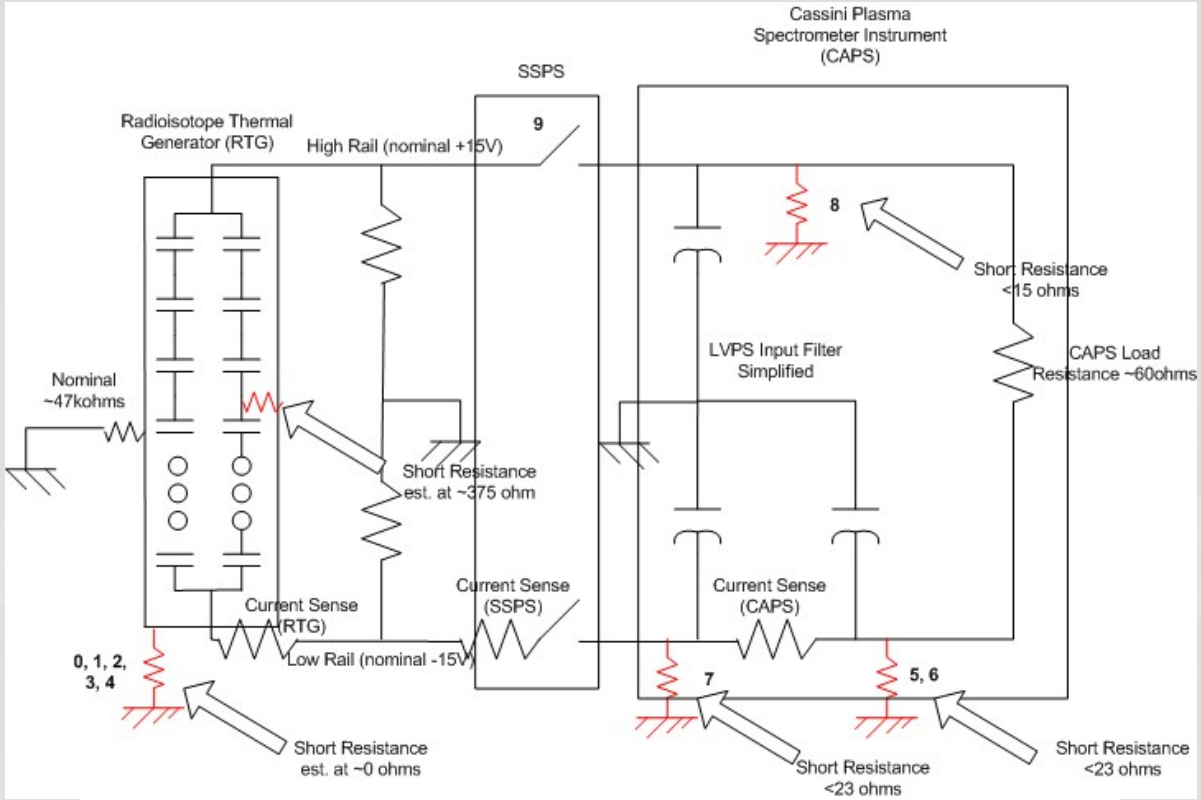

Simple schematic of the observed short circuits experienced to date correlated to the timeline.

Note: The internal and external RTG short circuit characteristics are important,

- But unrelated to the Cassini Plasma Spectrometer (CAPS) short circuit events
  - With the exception of providing an undesired current flow directly into/out of the RTG with respect to the high and low rail short events

This briefing is for status only and does not represent complete engineering data analysis

Short Circuit Failure Logic Determined for CAPS

- No single part failure can explain shorts at 3 different sites
  1. Low side to chassis down stream of the current sensor, short #5
  2. Low side to chassis up stream of the current sensor, short #7
  3. High side to chassis, short #8
- A single credible phenomenon may explain the observed symptoms
  1. Tin whisker growth from tin-plated inductor cans to power or power return
- Other causes that could explain the symptoms such as Nickel flakes or other low-resistive foreign object debris (FOD) have no identified source, have to be fairly long, and penetrate conformal coat

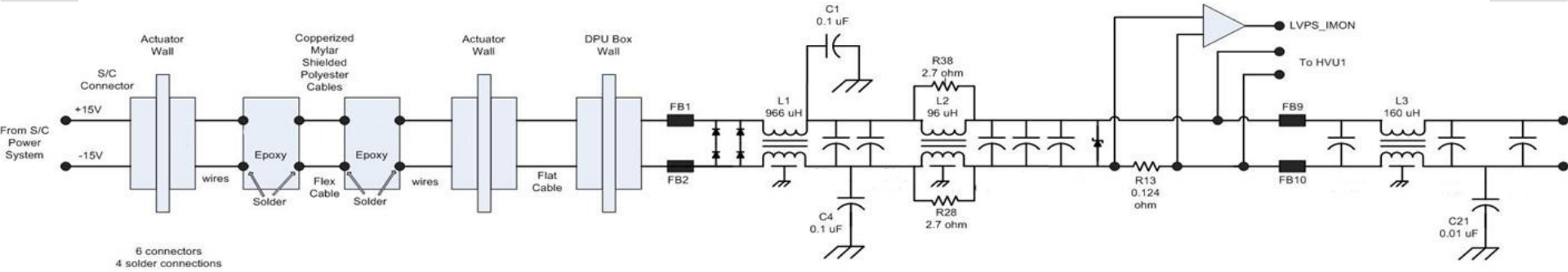

Simplified Schematic of Cassini-CAPS Power Interface

Most Likely Affected Area for CAPS Shorts on LVPS

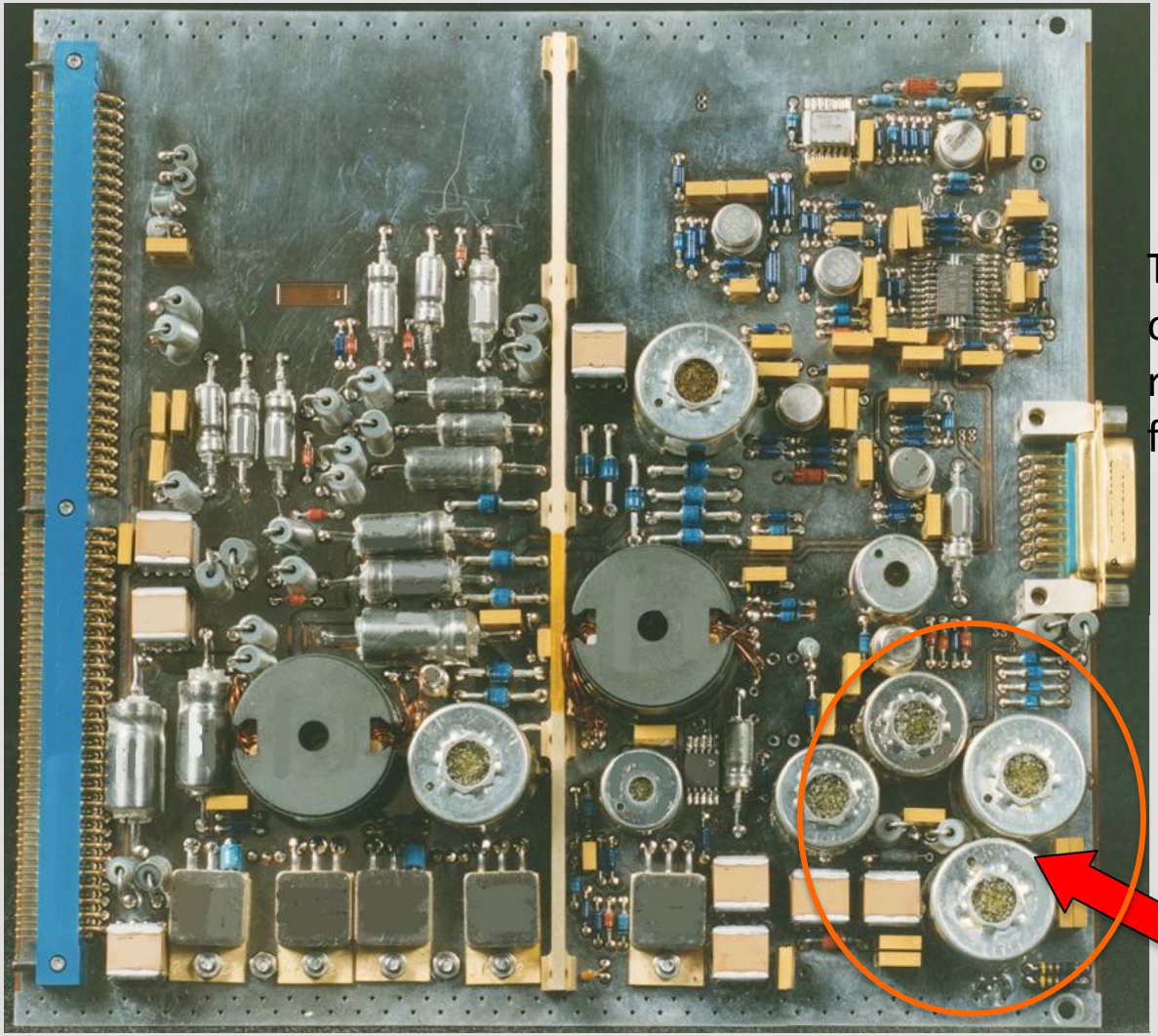

Tin whiskers were observed on representative flight cans

Region where tin whiskers can create shorts to power and return (L1, L2, L3)

This briefing is for status only and does not represent complete engineering data analysis

Tin Whiskers Observed on Circa Era Similarly Tin-Plated Cans (from same vendor)

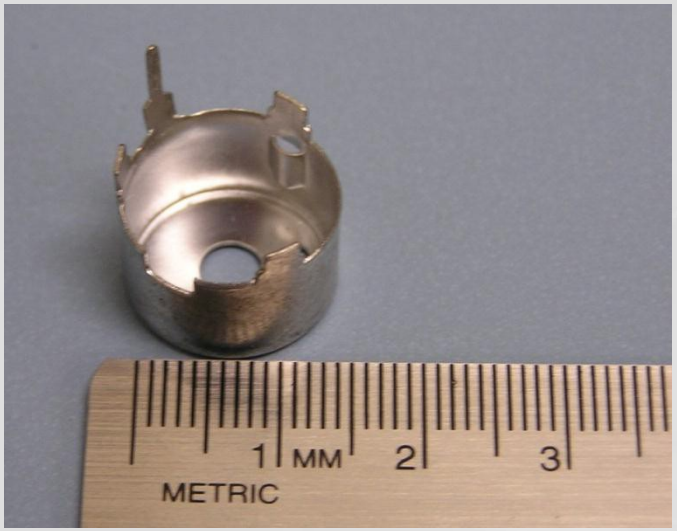

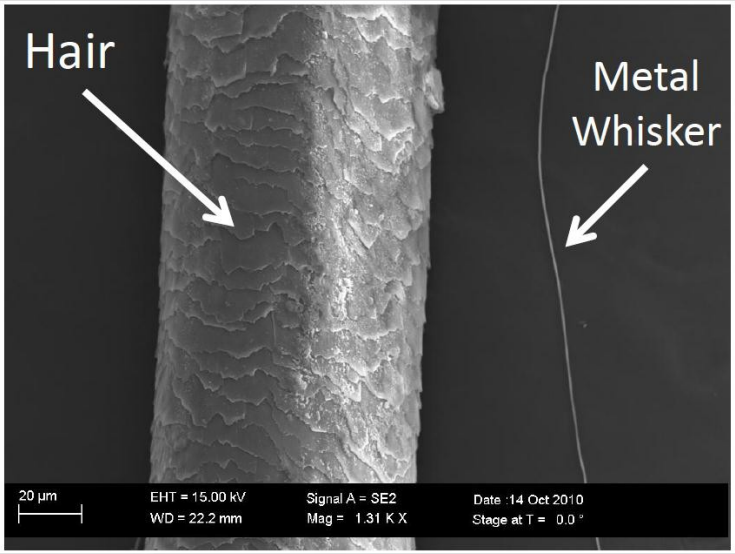

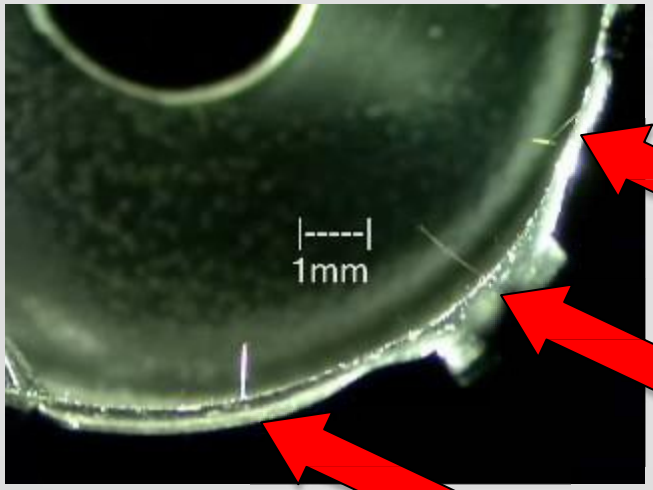

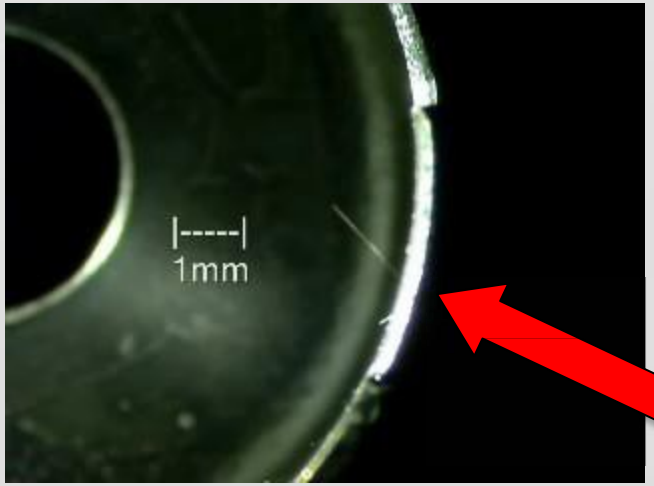

Cassini Short Circuit Observations vs. Tin Whisker Characteristics

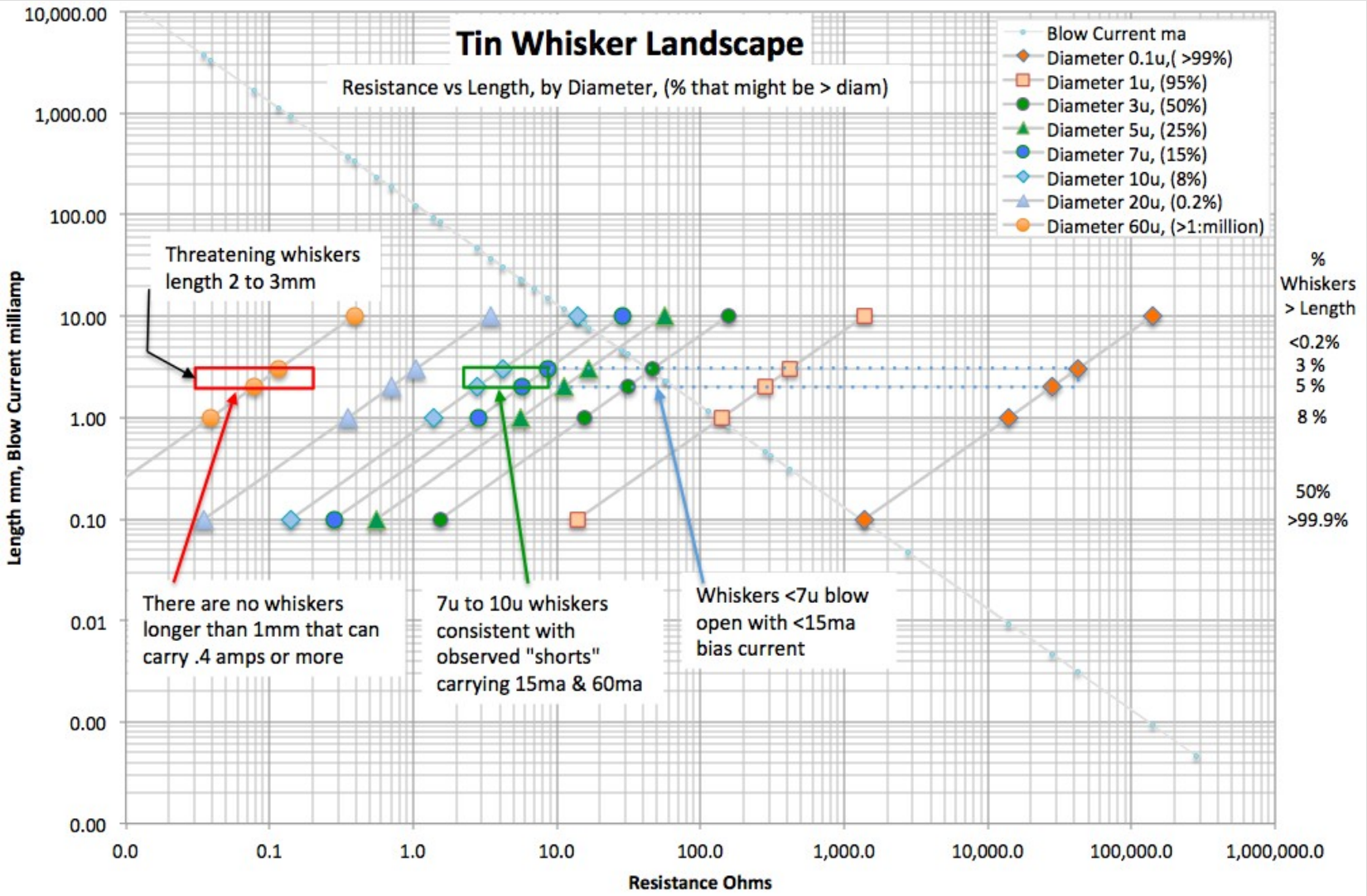

This briefing is for status only and does not represent complete engineering data analysis

Recommendations for Cassini Program Based on Investigation

- After completing both fishbone and fault tree analyses as well as determining worst case conditions to be avoided, the investigation team determined the risk to loss of mission, or experiencing an undesired under voltage trip, was low as a result of the likely root cause - provided sufficient power margin was available to trip the SSPS upon turn-on, if necessary
- Once operations resumed, the team concluded the CAPS instrument was no more likely to cause an under voltage condition than in the past operating conditions

Power On Timeline

- **Phase 1: Low voltage turn on**
  - 2012-076T23:28:11 to 077T00:27:54
  - Near-standard power-on sequence
  - Turn actuator on, keep it in a fixed position (RAM-direction)
  - Completed successfully
  - *No change in spacecraft bus rail voltages*
    - *Indicates **clearing of high rail short** prior to, or during, the power on*
- **Phase 2: High voltage ramp up**
  - 078T21:36:00 to 079T03:52:18
  - Power on and ramp up high voltage supplies
  - Completed successfully, science data return nominal
  - *No change in spacecraft bus rail voltages*
- **Phase 3: Actuation and resumption of nominal operations**
  - 080T04:07:00 to 080T08:07:14
  - Rotate the actuator by a slow move to the positive hard limit in order to calibrate position: "Home" mode
    - Rate: ~1°/minute
    - Limit switch stops further movement
    - Position held until completion of 4 hours
  - Followed by "FOV" mode, usual back and forth actuation between -76° and +104°
    - Rate: 1°/second; slower rate at turns
  - Activity completed successfully with resumption of nominal science operations
  - *However, rail voltages shifted near the end of "Home" mode, and prior to "FOV", indicating a **high rail short** at 080T08:04:26*
  - *CAPS current draw increased about +10 mA as measured by the LVPS current monitor*
  - *No impact on science data*

This briefing is for status only and does not represent complete engineering data analysis

Closer Inspection of the Actuator Mode Transition Timing

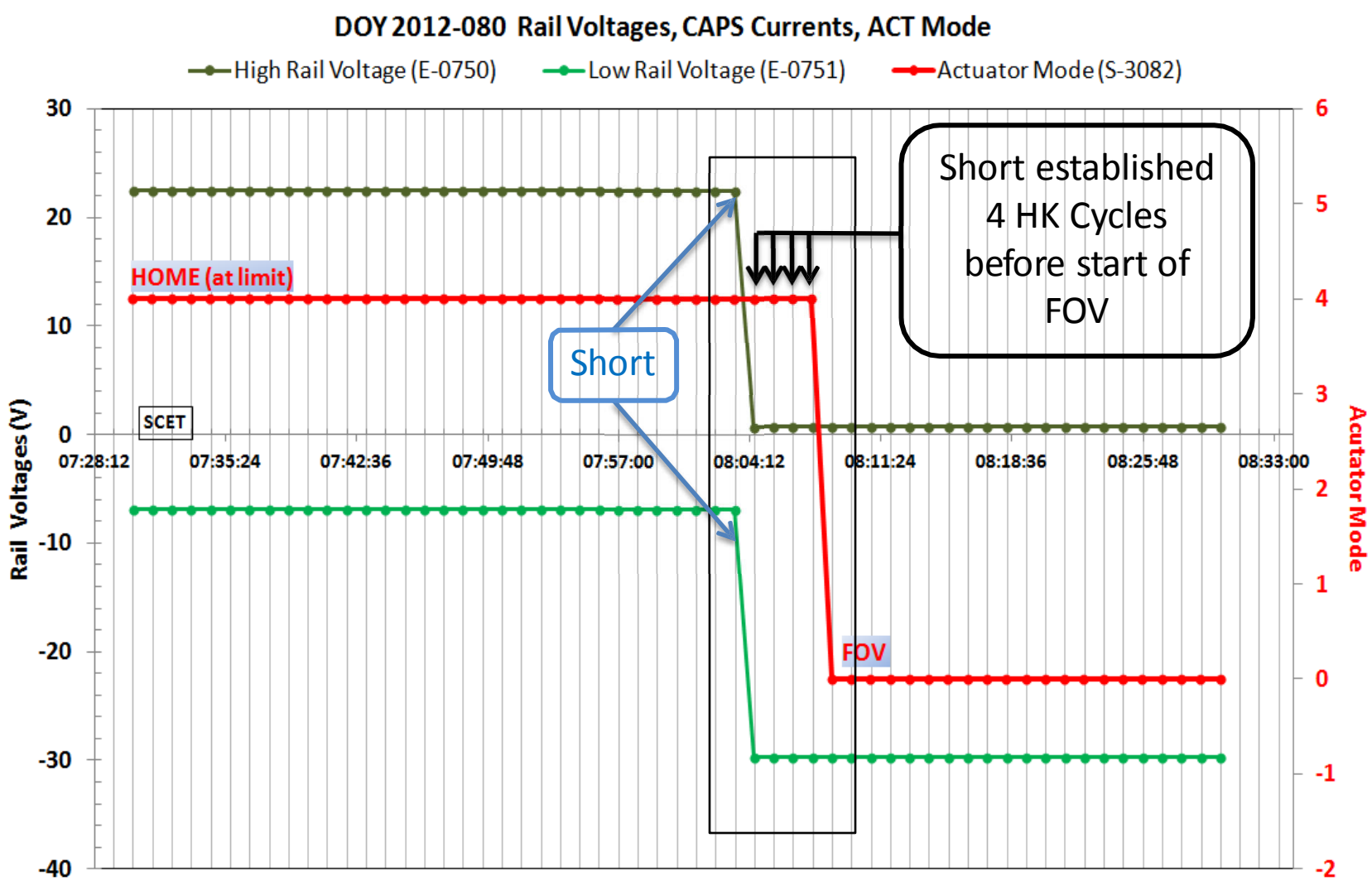

This briefing is for status only and does not represent complete engineering data analysis

Summary

- High rail short observed after CAPS turned back on
  - Likely same short in place prior to turning off instrument
    - oxide interface buildup during non-operating period most likely broke down after power was re-applied
- Cassini has experienced multiple observed short circuits of both the high and low rail, specifically associated with the CAPS feed
- Observed characteristics associated with current carrying capability of the observed shorts and identification of pure tin plating likely used on inductor covers in the instrument suggest tin whiskers are the most likely cause
- As a result of the Cassini power system architecture design, the investigation found there is a low risk for loss of mission solely as a result of the tin whisker shorts

This briefing is for status only and does not represent complete engineering data analysis

Acknowledgements!

- The authors would like to sincerely thank the following individuals for their valuable contributions:
  - Michael Bay (ASRC), Lyudmyla Panashchenko and Henning Leidecker (NASA GSFC), David Young and Frank Crary (SwRI), Julie Webster, and Bob Mitchell (JPL)