Construction and Resource Utilization Explorer: Regolith Characterization using a Modular Instrument Suite and Analysis Tools

Jerome B. Johnson[1], William V. Boynton[2], Keil Davis[3], Richard Elphic[4], Brian Glass[5], Albert F. C. Haldemann[6], Frederick W. Adams[7]

[1]*USA ERDC-CRREL, PO Box 35170, Ft. Wainwright, AK 99703*
[2]*University of Arizona, Lunar & Planetary Lab., 1629 E Univ. Blvd., Tucson, AZ 85721*
[3]*Honeybee Robotics, 460 West 34th Street, New York, NY 10001*
[4]*Los Alamos National Laboratory, ISR-1, MS-D466 Los Alamos, NM 87545*
[5]*NASA AMES Research Center, Moffett Field, CA 94035*
[6]*JPL, California Institute of Technology, MS 238-420, 4800 Oak Grove Dr., Pasadena, CA 91109*
[7]*NASA John F. Kennedy Space Center, YA-D4, Kennedy Space Center, FL 32899*
907-353-5179, Jerome.B.Johnson@erdc.usace.army.mil

Abstract. The Construction Resource Utilization eXplorer (CRUX) is a technology maturation project for the U.S. National Aeronautics and Space Administration to provide enabling technology for lunar and planetary surface operations (LPSO). The CRUX will have 10 instruments, a data handling function (Mapper - with features of data subscription, fusion, interpretation, and publication through geographical information system [GIS] displays), and a decision support system (DSS) to provide information needed to plan and conduct LPSO. Six CRUX instruments are associated with an instrumented drill to directly measure regolith properties (thermal, electrical, mechanical, and textural) and to determine the presence of water and other hydrogen sources to a depth of about 2 m (Prospector). CRUX surface and geophysical instruments (Surveyor) are designed to determine the presence of hydrogen, delineate near subsurface properties, stratigraphy, and buried objects over a broad area through the use of neutron and seismic probes, and ground penetrating radar. Techniques to receive data from existing space qualified stereo pair cameras to determine surface topography will also be part of the CRUX. The Mapper will ingest information from CRUX instruments and other lunar and planetary data sources, and provide data handling and display features for DSS output. CRUX operation will be semiautonomous and near real-time to allow its use for either planning or operations purposes.

INTRODUCTION

The success of future lunar and planetary missions will depend critically on the ability to identify optimal sites to conduct lunar and planetary surface operations (LPSO) related to *in situ* resource utilization (ISRU), construction, environmental management, and surface mobility. Successful LPSO will require a good knowledge of local surface relief and roughniss, geotechnical properties (e.g., grain size, mineralogy, bulk density, thermal and mechanical properties) and, the concentration and distribution of resources (with a particular interest in the presence of water). We are developing a Construction Resource Utilization eXplorer (CRUX) that consists of an integrated modular suite of instruments (Prospector-Surveyor) combined with display (Mapper) and decision support system (DSS) analysis tools to characterize regolith resources, surface conditions, and geotechnical properties (Figure 1). The CRUX is a NASA technology maturation project for the Exploration Systems Research and Technology Program, Exploration Systems Mission Directorate designed to provide critical technology for a return to the Moon and later planetary exploration. The current project focus is to operate under lunar conditions in keeping with current NASA priorities, but with the recognition that our development path should also take into account the possibility of surface operations on Mars at some future date.

other available data, and models to provide information about regolith properties needed for Lunar and Planetary Surface Operations (LPSO) that cannot be determined otherwise.

The combination of regolith property data measurement, data fusion methods, DSS tools, and display functions provide a robust decision support system in which location-referenced raw and interpreted data from the CRUX instrument suite, along with other (e.g., lunar satellite) data, can be rapidly visualized, updated, and communicated to guide further site investigations or LPSO activities, or to plan future LPSO activities. This will be an enabling technology for LPSO with benefit to future solar system exploration.

LUNAR SURFACE OPERATIONS REQUIREMENTS

Lunar Regolith Resources

ISRU of oxygen, hydrogen, and water enables substantial mission architecture efficiency and cost reductions (Beyond Earth's Boundaries report, Lofgren, 1993; Hoffmana and Kaplan, 1997). While Lunar soils contain abundant oxygen in the form of oxide minerals, no significant source of hydrogen had been identified until the recent data from the Lunar Prospector mission. The data from Prospector's neutron spectrometer have been interpreted as showing significant quantities of hydrogen (in an uncertain chemical form) in the permanently shadowed craters of the lunar poles (Feldman et al, 1998, 2000). Even though the resolution of these data is only 10s of kilometers, the mapping shows significant deposits in large (> 40 km in diameter) craters in the lunar polar regions (longitude >75°), where temperatures can range from 40 to 100K, depending on the amount of radiation received from nearby crater walls and other features (Vasavada et al., 1999). These temperatures are sufficient to preserve water layers for billions of years if they are covered by a thin layer of regolith (Vasavada et al., 1999; Salvail and Fanale, 1994). Radiation from extra-solar sources (such as cosmic rays and UV radiation) can drive reactions involving hydrogen, water and the regolith. The analysis of the Lunar Prospector data places the hydrogen concentration at 1700 ± 900 ppm, which would translate to 1.5 ± 0.8% as water in the crater floor bottom regolith near the south pole. Given the coarse resolution of the data, local concentration of up to 10% water may be present near the north pole, a clearly significant deposit for ISRU production. If these deposits resulted from comet impacts, the layers may be even more concentrated and contain a variety of other valuable compounds, such as CO, methanol, carbon dioxide, ammonia and methane (Allamandola et al., 1999). Modeling of such cometary impacts suggest that a 10 cm thick layer would survive for a billion years (Crider and Vondrak, 2000, 2002). Since random drilling and excavation to locate such deposits would be both costly and ineffective, our approach is to use the Prospecter-Surveyeor/Mapper-DSS to optimize the surveying and prospecting efforts that support LPSO – making it an enabling technology for ISRU.

Oxygen can be produced from the oxide minerals on the Moon by several processes, most of which require high temperatures and lots of energy for electrolysis. However, these processes would produce oxygen at any location. All have their problems or are limited in some way. Hydrogen reduction of iron oxide bearing minerals is the lowest temperature option and easiest to implement, but requires more regolith to be heated to ~900°C. Water is produced, but yields follow the FeO concentration of the feedstock. Locating higher concentrations of FeO (not free elemental iron) would be of interest. Hydrogen supplies must be found or brought from Earth to implement this process. If solar hydrogen is found, but no water, then this process would be a leading candidate for implementation to produce oxygen.

Efficient ISRU requires identification of the richest "ore bodies" (primarily water), which cannot be accomplished using orbital instruments, which lack resolution. The methods used to map deposits in support of ISRU must have a resolution that is significantly better than the size of deposits (minimally, about one to five meters in the surface horizontal plane), be able to resolve to 0.2 meters in depth, and provide an indication of the chemical form of hydrogen. These limits are in the range of the proposed Prospecter-Surveyor/Mapper-DSS capabilities.

Lunar Regolith Construction

For the CRUX project, construction is defined as any activity affected by regolith and surface properties including: spacecraft operations, mobility systems, structures, and excavation for ISRU or infrastructure development. Regolith

Crux components	Starting TRL	Heritage	Function
Subsurface Access System (SAS)	4/5	NASA funded; Honeybee Robotics	Drilling; sample acquisition and sample handling for Prospector surface instruments
Prospector Borehole Neutron Probe (BNeuP)	5	NASA funded; Los Alamos National Laboratory (LANL)	Detect subsurface hydrogen and profile its distribution with depth
Prospector Electrical Properties Probe (EPP)	3/4	NASA funded project	Borehole regolith dielectric constant (infer water/ice content), electrical conductivity, and density
Prospector Thermal Analyzer (TA)	3	NASA funded: University of Arizona	Receives the sample from the SAS for controlled heating and is the front end to the thermal evolved gas analyzer (TEGA)
Prospector Downhole Microscopic Camera (DCAM)	2/3	JPL internal project	Borehole stratigraphy, texture, and grain properties
Prospector Mechanical Properties Tester (MPT)	2/3	Geotech. Engineering industry, Engineer Research and Development Center (EDRC)	Borehole regolith shear strength index & compaction properties
Prospector Thermal Conductivity and Diffusivity Probe (TCDP)	2/3	Geophysical heat flow community, ERDC	Regolith thermal properties
Surveyor Seismic Profiler (SEIP)	4	NASA & Department of Defense funded: JPL & ERDC projects	Complement and extend borehole data; density; wave speed; stratigraphy
Surveyor Ground Penetrating Radar (GPR)	4	NASA funded; JPL	Complement and extend borehole data; high resolution subsurface profiles
Surface Neutron Probe (SNeuP)	5	NASA funded; LANL	Detect near-surface hydrogen
Surveyor Virtual Surface Stereo Camera VRCAM	N/A	NASA funded; Mars rovers - JPL	Determine surface features and topography
CRUX Executive Control Software (CEC)	N/A	NASA funded; Ames Research Center for rover applications	Provide executive level control of instrument integration, operation, and data delivery to the Mapper/DSS
Mapper-DSS	N/A	US Army Corps of Engineers operations, ERDC	Near real-time data collection, storage, handling, fusion, & interpretation; DSS tools & displays.

Surveyor Instruments

Surveyor instruments include geophysical instruments (SNeuP, SEIP, and GPR) and the stereo camera that are best deployed using a mobile platform to provide high-resolution measurements of regolith properties over relatively large area. The geophysical measurements provide information about near subsurface of the regolith that can be used to determine high-value locations to deploy the Prospector drill and instrument package to make direct measurements of regolith properties. Prospector measurements can then be used to interpret the geophysical data to provide a more accurate understanding of regolith properties, and their variation, in the regions around the drill-hole. Further improvements in mapping regolith properties can be made through additional Prospector instrumented drill measurements in conjunction with data fusion interpretation.

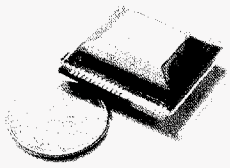

FIGURE 3. A low power miniature seismometer with an embedded 24 bit digitizer is being developed for the seismic profiler (Pike et al, 2005).

The CRUX GPR is designed to detect layering, subsurface objects, and to infer regolith physical property to high resolution using data fusion interpretations and measurement from Prospector instruments, the SNeuP, and the SEIP. The CRUX GPR is a modification of an 80 MHz frequency GPR that was developed for the Mars under the MIDP. The Mars GPR was intended for deeper penetration of up to 100 m, at a moderate resolution of 0.5 m.

The CRUX GPR operates at 800 MHz, penetrating up to 5 m, but with finer depth resolution (about 10 cm). The first proptotype of the CRUX GPR has been designed, fabricated and successfully field tested at the Quester gas pipeline site in Indio, CA. This test site was used since two buried steel pipes are well known targets (1 m depth, 76 cm diameter, separated by 11.5 m). Two sets of antennas were tested with the GPR electronics: a resistively loaded dipole antenna pair and a pair of RC-loaded bowtie antennas. Both sets gave comparable GPR traces, with the resistively loaded antenna set providing slightly better performance. Traces of the two buried metal pipes at the Indio site appear as the two "eyebrows" in the GPR traces are shown in Figure 4.

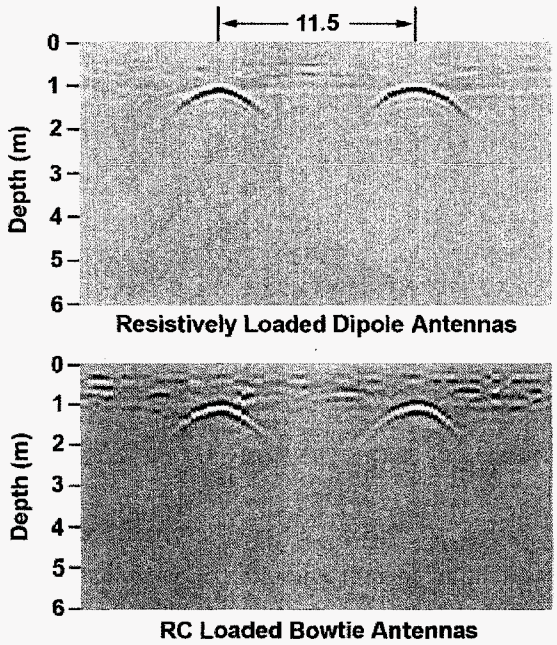

FIGURE 4. Examples of CRUX GPR field-test data from the Quester gas pipeline site in Indio, CA.

The CRUX stereo camera will be used to characterize the regolith surface to detect surface objects, generate regional topography, and provide a general visual image of the surroundings needed to maintain a situational awareness and provide navigational aids. Since topographic information derived from stereo camera systems is a space-proven technology, we will simulate the stereo camera (VRCAM) using existing stereo pair pictures to generate regional topography or include a-priori orbital topographic data to facilitate development of the Mapper-DSS.

source. The BNeuP (also referred to as D-HYDRA), is currently under development in partnership with Honeybee Robotics under a NASA MIDP with one system fabricated and under test. Its heritage includes the heritage of the SNeuP/ HYDRA.

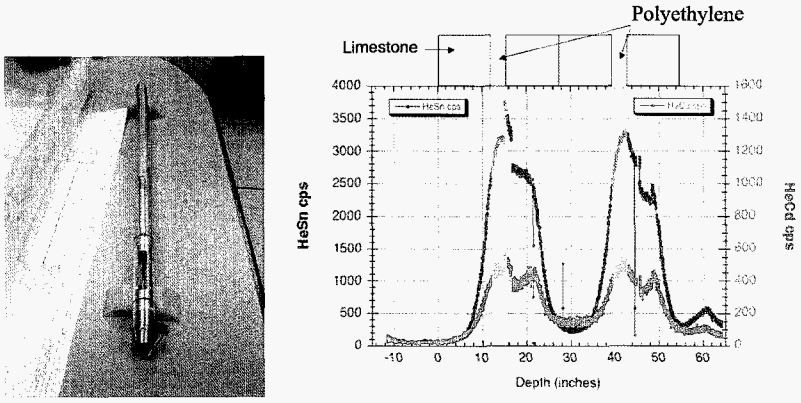

FIGURE 6. BNeuP/D-HYDRA drill-integrated neutron spectrometer (on left) and test data for traverse of a two-meter borehole in limestone (right). A drawing of the test configuration is shown above the test data – dry limestone blocks separated by polyethylene 'water ice' proxy.

The TA sample acquisition system will be integrated into the drill system, but integration of the remaining Prospector instruments in the drill or the Inspector will be decided based on the outcome of the trade studies that are currently underway. Current trends are, however, to move more of the instruments to the inspector, to allow for larger instrument volume, and to use the drill system actuation capability to aid the conduct of borehole measurements independent of drilling activity. These instruments include the MPT (shear strength and indenter), EPP, DCAM, and TCDP. Use of the Inspector will require methods to allow reentry into an open or collapsed borehole.

The MPT is designed to provide information on the geotechnical characteristics of lunar and planetary regoliths that will be required for a wide range of surface operations and resource recovery activities. Such measurements are necessary because the current state of knowledge of granular media behavior does not allow the reliable assessment of the mechanical properties in lunar or planetary environments based on physical properties measurements alone. It is critical that the MPT obtain at least rudimentary mechanical properties information. To measure short-term strength, a shear strength device will employ three retractable vanes that will engage the sidewall of the borehole as it travels down a borehole in a spiral motion; a load cell will monitor the net torque produced as the vanes cut into the borehole wall several mm. To monitor the time-dependent deformation response of regolith under compressive loading conditions, an indenter, that will apply a known load over a specified area to the surface of the regolith will be deployed on the bottom of a drill or Inspector segment. Both devices will use the robotic drill for actuation and contain a transducer whose output will be recorded as a function of time. While the robotic deployment of these devices may be unique, the basic methods are commonly used in terrestrial applications.

The EPP consists of four electrical probes that "see" into the regolith a distance that is about four times the probe spacing to measure soil impedance as a function of frequency which is then converted to soil dielectric constant and resistivity. Dielectric constant measurements from the borehole EPP can be used to help interpret surface GPR measurements to better define layer depths and constituents. Apollo measurements of the low-frequency dielectric constant of lunar regolith samples devoid of moisture is proportional to density (Figure 7). The EPP may also be able to detect ice directly due to the high static dielectric constant for ice of between 90 and 100 at 0°C and increases with decreasing temperatures increasing to a range of between 100 and 130 at –40°C (Hobbs, 1974). Also shown in Figure 7 are additional data from minerals typically found on the lunar surface. Notice that a single line fits both soil and mineral data. Also shown in the figure are outlier minerals, Titanates and water/ice. The titanites, such as Ilmenite, were part of the lunar soils but were found for the most part at concentrations less than 10% and so do not appreciably change the distribution. Thus, a dielectric constant measurement that exceeds 5 indicates the presence of a significant amount of an outlier mineral. The identification of ice follows from the relaxation in the dielectric constant with frequency. Below the relaxation frequency the value for ice is between 80 and 130 and above that

volatilize minerals and elements for analysis by the evolved gas analyzer (EGA). The combined TA and EGA is referred to as the TEGA. The TEGA instrument is a thermal and evolved-gas analyzer. It was originally flown on the 1998 Mars Polar Lander Mission, which failed to land successfully. It is being rebuilt, with substantial changes, for the Phoenix lander mission, which is scheduled to launch in August, 2005 and to land near the north pole of Mars in 2008.

The TA for the TEGA was designed to receive crushed samples from a scoop, but for CRUX it will be redesigned to receive samples from a drill. Depending on the nature of the drill, the interface might be very different from the Phoenix lander design. The TEGA ovens are very small with inside dimensions of about 2.4 mm diameter and 8 mm long (Figure 8). The male half, which contains the sample, is inserted into the female half, which contains the heater and temperature sensor. This design will be changed as ongoing design discussions and trade studies dictate.

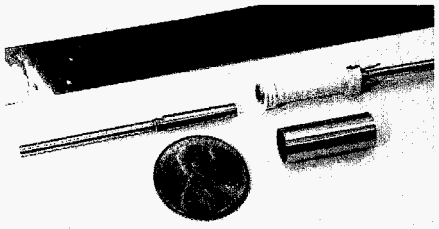

FIGURE 8. TEGA TA oven, which is delivered to the planetary surface in two halves. The small tapered male half receives the sample and is then inserted into the female half making a seal with the tapered joint. The female half contains the heater and temperature sensor.

As the sample is heated, various gases are evolved depending on the nature of the sample. These gases are passed on to an evolved-gas analyzer (EGA), which determines the nature of the gases that are evolved. The evolved gas is carried to the EGA with a stream of high-purity nitrogen. In the case of the Mars TEGA, the EGA is a magnetic-sector mass spectrometer, which can determine both the quantity of the evolved gas and its isotopic composition. The previously constructed Mars Polar Lander TEGA used tunable diode lasers to identify the quantity and composition of evolved gases (Boynton et al., 2001). Evolved gas analysis can be conducted using either mass spectrometry or tunable diode laser technology. Mass spectrometry has the advantage of being able to detect lower concentrations and requiring fewer gas molecules to conduct analyses.

For an application to measuring the lunar regolith, especially in the cold permanently shaded polar regions, TEGA is useful for its ability to determine the amount of ice, volatile hydrocarbons, and other minerals that may be present. It can detect ice, either calorimetrically as shown in Figure 9, or by seeing a release of H_2O detected in the EGA at a temperature near 0 deg C. It can detect the presence of organic compounds based on the mass spectrum of the evolved gases in the EGA.

Specific design for the SAS sample acquisition system and the TA sample receiving system will be formulated through trade studies to determine the influence of drilling and regolith handling on retained volatiles in the regolith. If too much energy is imparted into the regolith, water ice or adsorbed solar wind hydrogen may be volatilized reducing the accuracy of the measurement and/or producing explosive release of the volatilized substance. Theoretical and experimental studies are being conducted to determine and predict the fate of retained volatiles in the regolith to allow development of designs for sample acquisition and to set drilling protocols. Preliminary results indicate that keeping volatile temperatures below 150K should prevent significant loss of volatiles during drilling and sample transfer.

The CEC software approach is built upon the Common Object Request Brokering Architecture (CORBA), thus enabling it to communicate seamlessly across a wide range of platforms and operating systems as shown in Figure 11. MInI is a client/server architecture, and allows any number of clients to connect to any number of servers. At the center of this architecture is a module called the Instrument Dispatcher. When a client wants to send a command to a server, it specifies the server name in the command message and then sends it on to the instrument dispatcher. The instrument dispatcher forwards the command to the appropriate server if that server has been registered.

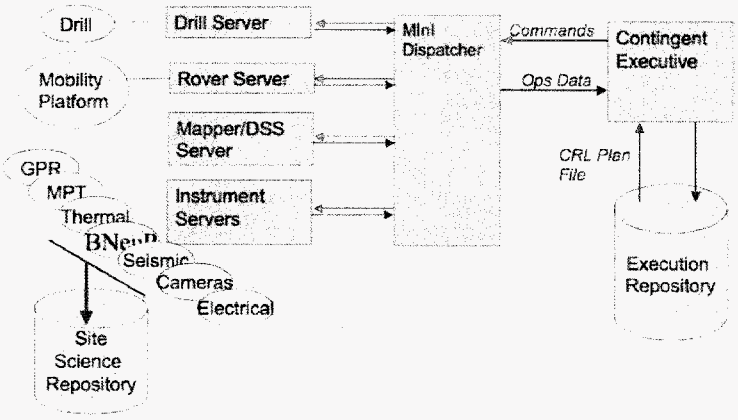

Figure 11. Strawman CEC client-server architecture, built on CORBA.

All data messages utilize strings, and a built in string library is used to pack the data into these messages, as well as extract the data from them. What is required from the standpoint of client and server are previously agreed to labels for commands, data requests, and any accompanying parameters.

MInI provides the CEC with several utilities that helps with the server development process. First, it provides a configuration utility. To create a MInI server, a CEC configuration file can be made that contains the labels of the commands, data requests, and parameter names. The configuration utility will then create a standard, working MInI server that supports these command requests. The control software that is used to control the device or instrument is then added to this standard template in order to finish the server. A MInI graphical user interface client can be used to send commands to any server to test its operation.

Technology Readiness Level 6 Qualification

The end goal of the CRUX project is to demonstrate the CRUX instrument suite to a TRL 6 via functional tests in a near-lunar environment. This testing will also verify the integrated modular approach for the instruments along with software control, display, and analysis capabilities provided by the CEC and Mapper/DSS. The TRL 6 CRUX demonstration environment will be provided by modifying an existing vacuum test chamber located at KSC. Design modifications to ensure vacuum, temperature, and instrument suite accommodation capabilities are currently underway at KSC.

Nominal vacuums of 10^{-6} torr and lunar sky temperatures of 77 °K will be used to simulate the near-lunar environment. Actual lunar vacuums of 10^{-10} to 10^{-12} are cost prohibitive and technically difficult to achieve in a laboratory setting. However, the nominal testing vacuum of 10^{-6} torr is achievable in a laboratory setting and eliminates convective heat transfer. Lunar sky temperatures of 77 °K will be accomplished by using liquid nitrogen-cooled cold shrouds around the interior of the chamber. A 40 °K temperature of the regolith will be accomplished by using liquid helium cooling plates.

Prior to actual testing, several issues will require careful study to ensure proper TRL 6 functional tests. The process of pumping down the chamber must be carefully orchestrated to prevent or minimize the cryogenic shields and cooling plates from acting as cryogenic vacuum pumps. Once liquid cryogenics flow through the cryogenic shields

services. The CRUX data warehouse is responsible for persistence and dissemination of all relevant program data. The data warehouse will be responsible for data archive, replication to distributed sites, data security and role-based review, validation and release. Multi-versioned data will also be supported in the data warehouse. It is anticipated that any data reduction or analysis that can be done at the data warehouse/persistence tier will be done at this tier. This could include server side IDL, Java applications and stored database procedures. Above the data warehouse tier of our architecture a series of application development and deployment frameworks will allow a diverse suite of users to use any standards-based application to display and analyze CRUX program data. Anticipated clients include a Java desktop application built upon the Eclipse framework. This application and its modules should allow for integration of unique CRUX analysis capabilities with the NASA Maestro/Science Activity Planner. A web-based Mapper/DSS interface will provide the broadest possible audience access to data visualization and analysis tools. The web-based system which is currently under development supports geographic display and analysis of program data, and the display and query of models processed through the decision support system. Commercial off the shelf software such as ESRI ArcGIS, ENVI IDL, and MATLAB along with a suite of open source and proprietary data reduction and analysis tools will be used to analyze and reduce CRUX data. These tools will interact with the warehouse via common protocols such as ODBC, ESRI SDE, and through a series of data discovery and delivery web services provided at this tier.

The delivered products from Mapper/DSS will be a series of science-based engineering guidelines and data interpretation protocols implemented in software. These guidelines will be driven by engineering scenarios developed as needed by astronauts and engineers. As an example consider the need to determine the concentration and distribution of water and hydrogen in the polar lunar regolith (or only hydrogen elsewhere). The primary CRUX instrument measurements might be existing satellite neutron spectrometer data to guide surveyor instruments, which in turn guide deployment of Prospector instruments to conduct site specific measurements. To accurately evaluate if hydrogen detected by neutron spectrometers is solar wind hydrogen or water ice requires direct measurement by a TEGA like device, which can then be used through dada fusion processes to more accurately interpret the spectrometer data.

Data Integration, Fusion, and Decision Support

The Mapper/DSS achieves its full power when data are integrated to provide interrelated information that can be fused to derive regolith property information that cannot be determined from a single data source. The fused data and model results can then be delivered to aid LPSO decision-making. Data fusion methods, which use complementary data sets to determine information about the regolith that cannot be determined from individual instrument measurement data, are an integral part of our data analysis approach.

To demonstrate the data fusion and decision support system approach we again use the example characterizing the distribution and form of hydrogen. Hydrogen, depending whether it is in the form of water or solar wind deposits, is a potential source of fuel, water, and oxygen for space operations. Lunar Prospector orbital neutron probe data imply that regions of enhanced hydrogen exist in the lunar polar regions, possibly associated with permanently shadowed craters, but the form of that hydrogen is unknown. Data fusion methods can resolve both the interpretation uncertainties of the neutron data and produce 3D characterization of regolith hydrogen. Primary data fusion is between the TEGA, SNeuP, and BNeuP. The BNeuP provides information about hydrogen as a function of depth and time and the TEGA can detect water, solar wind hydrogen, and other elements or molecules as a function of depth. Data fusion consists of using the hydrogen concentration as a function of depth information from BNeuP and TEGA to help interpret SNeuP data to generate 3D information. Secondary information from the GPR, the DCAM, and the EPP, along with models of known and expected physical properties of granular materials to correlate different data sets, can improve our characterization of the hydrogen distribution. By combining individual data displays with the results derived from data fusion and models, products for operational decision-making can be produced (Figure 13). Some of these products may be maps of hydrogen distribution, regolith layering, individual borehole plots, and other important information for LPSO.

Beyond Earth's Boundaries, Report of the 90 Day Study on Human Exploration of the Moon and Mars.

Boynton, W.V. and others, "Thermal and Evolved Gas Analyzer: Part of the Mars Volatile and Climate Surveyor Integrated Payload", *J. Geophys. Res.,* 106(E8), pp. 17,683—17,698, (2001).

Crider, D. H. and Vondrak, R. R., "The Solar Wind as a Possible Source of Lunar Polar Hydrogen Deposits", *J. Geophys. Res.* **105**, pp. 26773-26782. (2000)

Crider, D. H. and Vondrak, R. R., "Hydrogen Migration to the Lunar Poles by Solar Wind Bombardment of the Moon", *Adv Space Res.* **30**, pp. 1869-1874. (2002).

Feldman, W.C., Maurice, S., Binder, A.B., Barraclough, B.L., Elphic, R.C., Lawrence, D.J., "Fluxes of Fast and Epithermal Neutrons from Lunar Prospector: Evidence for Water Ice at the Lunar Poles", *Science* 281, 1496-1500, (1998).

Feldman, W.C., Maurice, Lawrence, D.J., Little, R.C., Lawson, S.L, Gasnault, O., Wiens, R.C., Wiens, B.L., Barraclough, B.L., Elphic, E.C., Prettyman, T.H., Steinberg, J.T., and Binder, A.B., "Evidence for Water Ice near the Lunar Poles," *J. Geophys. Res.* 106(E10), 23,231-23,251, (2001).

Heiken, G.H., Vaniman, D.T., and French, B.M., *Lunar Source Book*, Cambridge University Press, 1991.

Herzen, R.V., and Maxwell, A.E., "The measurement of thermal conductivity of deep-sea sediments by a needle probe method", *J. Geophys. Res.*, 64 (10), 1557-1563, (1959).

Hobbs, P.V. *Ice Physics*, Clarendon Press, Oxford, 1974, p. 91.

Hoffman, S.J. and Kaplan, D. I. (editors), "Human Exploration of Mars: in: The Reference Mission of the NASA Mars Exploration Team", NASA Special Publication 6107, 1997.

Lambe, T. W. and Whitman, R. V. *Soil Mechanics*, John Wiley & Sons: New York, New York, 1969.

Lofgren, G., "The First Lunar Outpost: The Design Reference Mission and a New Era in Lunar Science", NASA Technical Report, NASA/JSC, Jan. 1, 1993.

Pike, W.T., Standley, I.M., and Banerdt, W.B., "A high-sensitivity broadband seismic sensor for shallow seismic sounding, Lunar Planet. Sci. XXXVI, 2005, abstract # 2002.

Salvail, J. R. and Fanale, F. P., "Near-Surface Ice on Mercury and the Moon: A Topographic Thermal Model", Icarus 111, pp. 441-455. (1994).

Vasavada, A. R., Paige, D. A., and Wood, S. E., "Near-Surface Temperatures on Mercury and the Moon and the Stability of Polar Ice Deposits", *Icarus* **141**, pp 179-193. (1999).
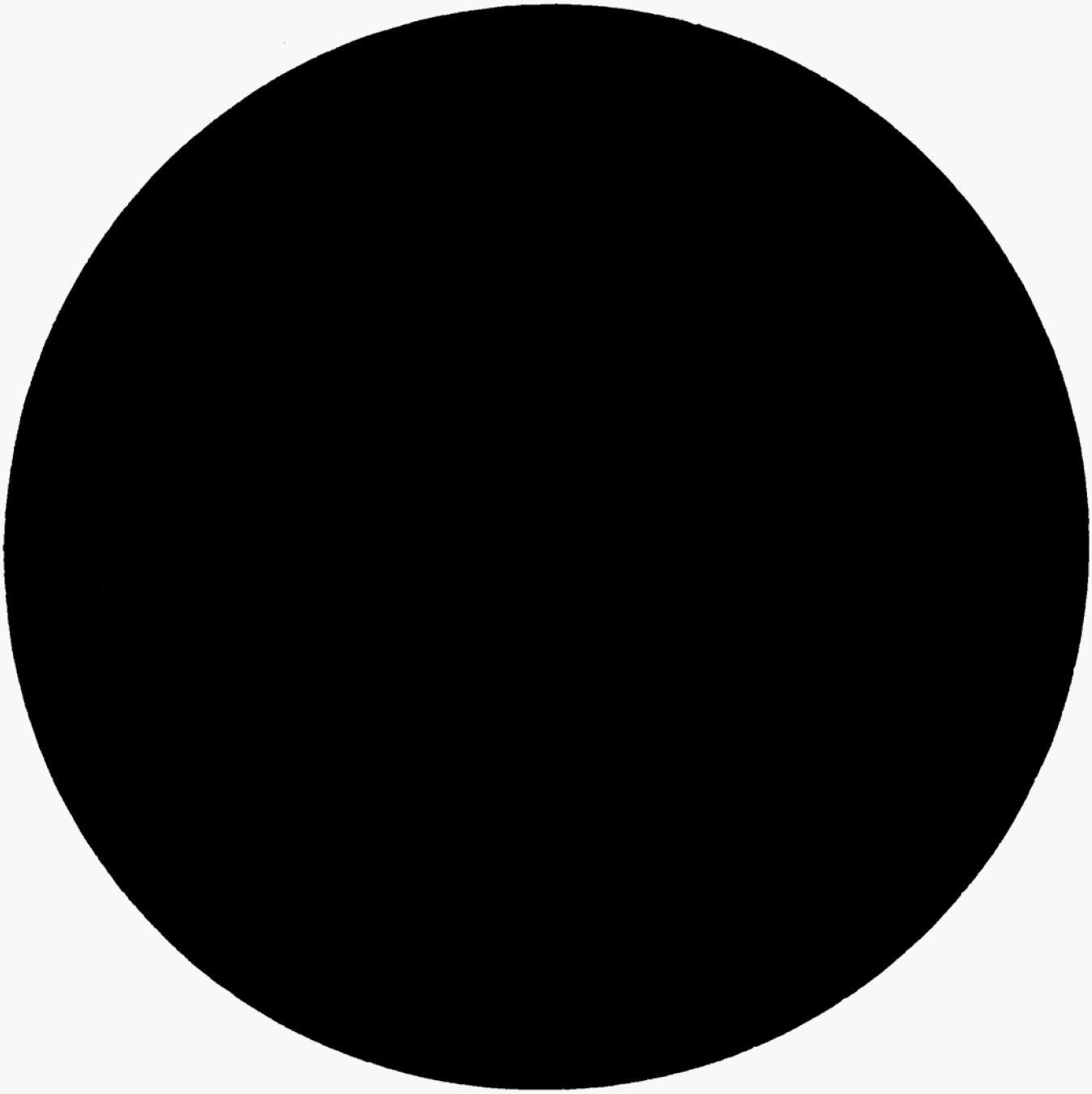
End of File