GeoSTAR – A Synthetic Aperture Microwave Sounder for Geostationary Missions

Bjorn Lambrigtsen*, William Wilson, Alan Tanner, Pekka Kangaslahti
Jet Propulsion Laboratory, 4900 Oak Grove Drive, Pasadena, CA 91109

ABSTRACT

The Geostationary Synthetic Thinned Aperture Radiometer (GeoSTAR) is a new microwave atmospheric sounder under development. It will bring capabilities similar to those now available on low-earth orbiting environmental satellites to geostationary orbit – where such capabilities have not been available. GeoSTAR will synthesize the multi-meter aperture needed to achieve the required spatial resolution, which will overcome the obstacle that has prevented a GEO microwave sounder from being implemented until now. The synthetic aperture approach has until recently not been feasible, due to the high power needed to operate the on-board high-speed massively parallel processing system required for 2D-synthesis, as well as a number of system and calibration obstacles. The development effort under way at JPL, with important contributions from the Goddard Space Flight Center and the University of Michigan, is intended to demonstrate the measurement concept and retire much of the technology risk. To that purpose a small ground based demo version of GeoSTAR is being constructed, which will be used to characterize system performance and test various calibration methods. This prototype development, which is being sponsored by NASA through its Instrument Incubator Program, will be completed in 2005. A GeoSTAR space mission can then be initiated. In parallel with the technology development, mission architecture studies are also under way in collaboration with the NOAA Office of System Development. In particular, the feasibility of incorporating GeoSTAR on the next generation of the geostationary weather satellites, GOES-R, is being closely examined. That would fill a long standing gap in the national weather monitoring capabilities.

Keywords: Atmospheric sounding, microwave, GOES, Geostationary, aperture synthesis, STAR

1. INTRODUCTION

The National Oceanic and Atmospheric Administration (NOAA) has for many years operated two weather satellite systems, the Polar-orbiting Operational Environmental Satellite system (POES), using low-earth orbiting (LEO) satellites, and the Geostationary Operational Environmental Satellite system (GOES), using geostationary earth orbiting (GEO) satellites. Similar systems are also operated by other nations. The POES satellites have been equipped with both infrared (IR) and microwave (MW) atmospheric sounders, which together make it possible to determine the vertical distribution of temperature and humidity in the troposphere even under cloudy conditions. Such satellite observations have had a significant impact on weather forecasting accuracy, especially in regions where in situ observations are sparse, such as in the southern oceans. In contrast, the GOES satellites have only been equipped with IR sounders, since it has not been feasible to build the large aperture system required to achieve sufficient spatial resolution for a MW sounder in GEO. As a result, and since clouds are almost completely opaque at infrared wavelengths, GOES soundings can only be obtained in cloud free areas and in the less important upper atmosphere, above the cloud tops. This has hindered the effective use of GOES data in numerical weather prediction. Full sounding capabilities with the GOES system is highly desirable because of the advantageous spatial and temporal coverage that is possible from GEO. While POES satellites provide coverage in relatively narrow swaths, and with a revisit time of 12-24 hours or more, GOES satellites can provide continuous hemispheric or regional coverage, making it possible to monitor highly dynamic phenomena such as hurricanes. Such observations are also important for climate and atmospheric process studies.

In response to a 2002 NASA Research Announcement calling for proposals to develop technology to enable new observational capabilities from geostationary orbits, the Geostationary Synthetic Thinned Aperture Radiometer

* bjorn.lambrigtsen@jpl.nasa.gov; phone 1 818 354-8932; fax 1 818 393-4619

(GeoSTAR) was proposed as a solution to the GOES microwave sounder problem. GeoSTAR synthesizes a large aperture to measure the atmospheric parameters at MW frequencies with high spatial resolution from GEO without requiring the very large and massive dish antenna of a real-aperture system – a major advantage of this technology. There are a number of other advantages as well. Sponsored by the NASA Instrument Incubator Program, an effort is currently under way at the Jet Propulsion Laboratory to develop the required technology and demonstrate the feasibility of the synthetic aperture approach – in the form of a small ground based prototype. When this risk reduction effort is completed in 2005, a space based GeoSTAR program can be initiated, which will for the first time provide microwave temperature and water vapor soundings as well as rain mapping from GEO, with the same measurement accuracy and spatial resolution as is now available from LEO – i.e. 50 km or better for temperature and 25 km or better for water vapor and rain.

2. PHYSICAL BASIS FOR MEASUREMENTS

2.1 Atmospheric soundings

GeoSTAR is an atmospheric sounder with rain mapping capabilities. It operates primarily in two millimeter wave bands. For tropospheric temperature sounding it will have a small number of channels near 50 GHz. For water vapor sounding it will use a set of 183-GHz channels, which are also used for rain mapping, as well as an intermediate "window" channel near 90 GHz. The atmospheric absorption spectra and the GeoSTAR channels are shown in Fig. 1, where the spectral channels of GeoSTAR are marked at the top of the figure. GeoSTAR will utilize the same approach as is used with the Advanced Microwave Sounding Unit (AMSU-A/B) system currently operated by NOAA as part of its POES weather satellites as well as by NASA for its Aqua research satellite, an approach that is now well established. These measurements will provide information to 'cloud clear' the observations from the GEO IR sounders, just as is currently being done in the LEO sounding systems. The cloud-cleared radiances are either directly assimilated into a weather forecasting system or are used to retrieve atmospheric profiles. This is done everywhere, not just in clear areas.

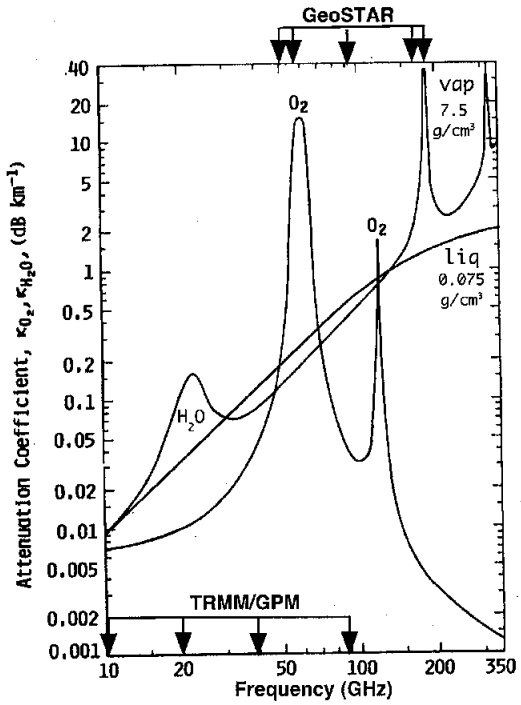

Fig. 1. Microwave atmospheric absorption spectra and GeoSTAR vs. GPM channels

To enable full IR-based soundings under cloudy conditions, the ability to provide microwave soundings all the way to the surface, at incidence angles up to 60°, is critical. For temperature sounding, which uses oxygen absorption features, this necessitates using the 50-60 GHz oxygen band and precludes the use of the oxygen line at 118 GHz. The latter would have the highly desirable advantage of permitting a much smaller aperture for a given spatial resolution, but as Fig. 2 [1] shows, the atmosphere is often so opaque, due to water vapor and clouds, as to make such a sounder useless under many common weather conditions. For example, the 118-GHz transmittance in a tropical cloudy atmosphere and at high incidence angles is so low that the crucial planetary boundary layer (i.e. the lowest 2 km) will be invisible.

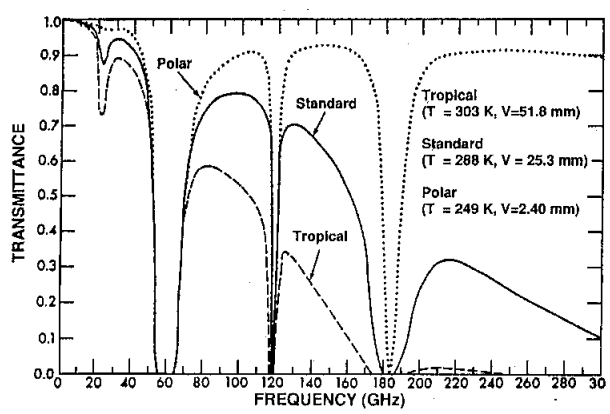

Fig. 2. Atmospheric transmittance

2.2 Rain measurements

GeoSTAR will also use the 183-GHz water vapor sounding channels for precipitation measurements. While the approach used with LEO rain radiometers, such as the currently operating Tropical Rain Mapping Mission (TRMM) and the planned Global Precipitation Mission (GPM), is primarily based on measuring the absorption effects of rain at lower frequencies, between 10 and 37 GHz (marked on Fig. 1), the GeoSTAR approach is primarily based on measuring the scattering effects associated with precipitation. The greatest advantage of the high frequency GeoSTAR approach is that high spatial resolution is easily achieved. This is because the antenna size required to achieve a certain spatial resolution is inversely proportional to the frequency. For a given spatial resolution, the aperture of a 200-GHz radiometer is 20 times smaller than that of a 10-GHz radiometer. That is what makes it feasible to deploy GeoSTAR as a rain mapper in GEO, where the great advantage of continuous spatio-temporal coverage is also realized. Because of size and weight and torque effects, it is very difficult and high-risk to implement the conventional scanning antenna approach in GEO. GeoSTAR for the first time makes it feasible to directly measure rain from GEO.

The GeoSTAR scattering approach derives from observations made in recent years with 183-GHz radiometers operated on high altitude aircraft. When passing over rain cells, a pronounced apparent cooling due to scattering is observed. This cooling can exceed 100 K over intense convective cells, a very large signal that can be used to detect and track hurricanes and other severe storms without the need for high radiometric sensitivity (i.e. dwell time). Since these radiometers are sounders, they have channels with a varying degree of opacity (so that they can sound different depths of the atmosphere). Some are so opaque that the surface is normally invisible. When rain is observed through an opaque channel, the scattering, which dominates over absorption at these frequencies, causes a severe apparent cooling over a background that represents the underlying atmospheric state (i.e. its temperature, water vapor, and cloud liquid water). This background is easily measured with a sounder. A new method has recently been developed [2] to retrieve rain rates from such high frequency observations and is now used with the NASA Aqua satellite launched in 2002. It is expected that the retrieval accuracy will be substantially improved during the Aqua mission.

3. INSTRUMENT CONCEPT

GeoSTAR uses a two-dimensional sparse array of receiving elements to synthesize a large aperture. The array is rigid and stationary, and is rigidly attached to the spacecraft. The array is pointed toward the Earth and has a constant full view of the visible Earth disk. This yields continuous high spatial resolution and wide coverage. GeoSTAR is a 2-D spatial interferometric system, which measures the complex cross-correlations between the output signals of all pairs that can be formed from a large number of millimeter wave radiometers arrayed in a "Y" shaped configuration[1], as shown in Fig. 3. The symmetric Y configuration results in a symmetric hexagonal sampling grid in UV-space (i.e. in the receiver plane, measured in wavelength units), also shown in Fig. 3. The smallest pair spacing (called a baseline), i.e. the spacing between neighboring receiving elements, determines the overall field of regard. For GEO, where the required field of regard is about 17.5° - the size of the Earth disk as seen from GEO, the receiver spacing is therefore approximately 3.5 wavelengths (about 2 cm at 50 GHz and about 6 mm at 183 GHz). The longest baseline determines the smallest spatial scale that can be resolved. To achieve a 50 km spatial resolution at 50 GHz, an aperture diameter in excess of 4 meters is required. That corresponds to approximately 100 receiving elements per array arm, or a total of about 300 elements. This in turn results in 45,000 unique baselines and 90,000 uv sampling points.

An innovative calibration system is used to constantly monitor the phase relationships between the array elements. That eliminates the need for precise control of the alignment between the antenna elements. This is what makes the aperture synthesis approach superior to the real aperture approach – no ultra precise surface accuracy, alignment or mechanical scanning are required. Phase knowledge takes the place of mechanical control, and the field of view is inherently matched to the Earth.

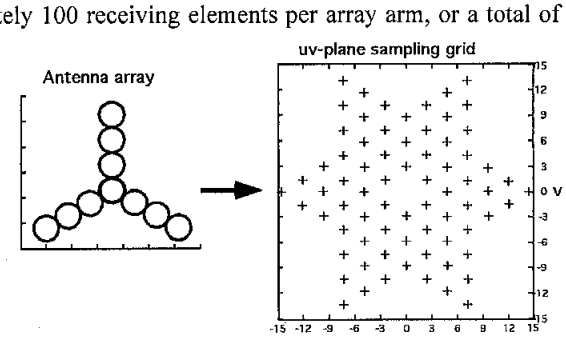

Fig. 3. Antenna array and UV samples

[1] Other configurations are also possible, such as a square, a U-shape, a T-shape or a circle

The measurements are divided into relatively brief measurement cycles of a few tens of seconds in duration. During each cycle the cross-correlations are accumulated simultaneously at each grid point. Interleaved with these are calibration measurements of phase and offset. At the end of each measurement cycle, all observations from that cycle are summed and saved for later transmission to the ground, along with engineering data. In the meantime, the next measurement cycle gets under way. The radiometers are sequentially tuned to different frequencies to measure the separate channels across the frequency band. The measurements are called visibilities and represent samples at the UV-grid points of the so-called visibility function.

3.1 The visibility function

The measurement cycle described above is relatively brief (~20 seconds) to make it possible to compensate for possible instrument phase changes, which could be caused by thermal strains in the receiver array as well as system pointing changes and other effects. The first processing task on the ground is therefore to apply phase calibration measurements and other equivalent information to the visibilities formed in the measurement cycle. The objective is to produce a set of adjusted visibility images that are aligned in terms of phase. They can then be co-added to form a single visibility image for each channel, which represents the much longer time span needed to achieve the required radiometric accuracy – typically, on the order of 5-15 minutes for each spectral channel. These visibility images have much lower noise than the individual measurement-cycle images.

3.2 The radiometric field

Once the visibility image has been determined, the interferometric equation

$$V_{ij} = \iint \frac{T_B(\xi,\eta)}{\sqrt{1-\xi^2-\eta^2}} F_i(\xi,\eta) F_j^*(\xi,\eta) \tilde{r}_{ij}\left(-\frac{u_{ij}\xi + v_{ij}\eta}{f_0}\right) e^{-i2\pi(u_{ij}\xi + v_{ij}\eta)} d\xi d\eta$$

is inverted to form the radiometric field T_B. Here V_{ij} is the visibility (i.e. the complex cross-correlation) measured between receivers i and j (i.e. at uv location u_{ij}, v_{ij}), f_0 is the center frequency, $F_i(\xi,\eta)$ is the normalized antenna pattern for receiver i, ξ and η are the direction cosines to the radiometric source field, and

$$\tilde{r}_{ij}(t) = e^{-i2\pi f_0 t} \int_0^\infty H_i(f) H_j^*(f) e^{i2\pi f t} df$$

is the so-called fringe wash function. $H_i(f)$ is the normalized frequency response of receiver i. For the GeoSTAR prototype, various methods to invert the visibility equation will be explored, including the so-called G-matrix method and an iterative method called the CLEAN technique. The latter is used in interferometric radio astronomy, but the technique has been modified for extended source fields. A major element of this technique is a Fourier transform, and an FFT procedure adapted for hexagonal grids [3] will be used. To reduce grid-cell sidelobes, it may also be necessary to incorporate a spatial sampling window - a so-called taper - into the inversion process. A number of different taper functions will be examined as part of the prototyping effort. During routine operation, the inversion process will also be tuned by using "ground truth" data.

4. CALIBRATION APPROACH

4.1 Phase calibration

Unlike for conventional radiometers, where radiometric calibration is the most important, for interferometric radiometers it is phase calibration that is most important. The image synthesis process requires accurate knowledge of the interferometric fringes associated with each visibility measurement. Such calibration data will be established and validated through pre-flight measurements, multiple on-board (internal) calibration circuits, and external references available from GEO.

The pre-flight measurements will include

- receiver frequency response
- elemental antenna patterns
- antenna element mutual coupling

antenna range measurements of the interferometer as a system

These measurements are used to validate models of the system's spatial response, which form the basis for image synthesis.

The on-board calibration subsystem will be used to stabilize the system response so that pre-flight measurements and models can be transferred to orbit. These circuits include a correlated noise source, which is distributed from a central source and injected behind each antenna in an array "arm" with equal phase to provide an accurate amplitude and phase reference. The phase between each arm can be controlled separately, which makes it possible to rotate the calibration measurements in phase space. Independent noise sources in each receiver front-end will be used to measure null-offsets in the correlators.

It will also be possible to use external calibration sources to validate the calibration on-orbit. These fall into four categories:

ground beacon
the Earth's limb
radiometric references
the Sun

The ground beacon is a noise source that periodically transmits a brief noise signal in a narrow beam. Since the location of the transmitter is known, this allows absolute phase calibration. The Earth limb also acts as an absolute reference, since the space background temperature of 2.7 K is known. Other radiometric references will be available from time to time from other simultaneous radiometric remote sensing observations from LEO orbiters and aircraft. These can be used to provide absolute radiometric calibration of GeoSTAR. Finally, when the Sun transits near the Earth, it will be aliased into the field of view in a fully predictable manner. That will be used to provide an additional phase calibration.

Two self-consistency techniques will also be applied to the calibration. The first, closure, traces errors in the visibility plane to the amplitude and phase response of each receiver through a network analysis approach. This method makes it possible to extend a partial calibration to the entire UV-plane. The second method, self-calibration, developed by the radio astronomy community – where no absolute calibration references are available, consists of starting with a trial image and then solving for all unknown system parameters until the reconstructed image converges.

4.2 Absolute radiometric calibration

The uv-plane sampling grid illustrated in Fig. 3 lacks a sampling point at the origin, the so-called zero-baseline. This point corresponds to the constant in a Fourier expansion and represents the spatial mean value of the brightness temperature field that is being observed. A single, separate receiver is dedicated to provide that measurement, since it cannot be provided by a correlation system. This receiver is operated as a conventional Dicke switched radiometer and is otherwise identical to the array receivers. All receivers, including the zero-baseline one, have the same field of view to encompass the entire Earth disk – about 17.5° from GEO. The zero-baseline receiver therefore measures the average brightness temperature of the Earth disk, as required.

Coincident AMSU observations from underpassing POES satellites will give additional absolute radiometric reference points, since the GeoSTAR channel frequencies will be identical to those used for AMSU.

5. PROTOTYPING EFFORT

An effort, funded by NASA, is currently under way at the Jet Propulsion Laboratory to develop a small ground based prototype unit. This is being done jointly with collaborators at the NASA Goddard Space Flight Center and the University of Michigan. The objectives are to reduce technology risk for future space implementations as well as to demonstrate the measurement concept, test performance, evaluate the calibration approach, and assess measurement accuracy. The prototype will be used for laboratory and antenna range measurements. A limited set of field observations will also be made to demonstrate the ability to derive geophysical parameters with commonly used retrieval algorithms.

To minimize cost and time to completion, the prototype consists of a small array of 24 elements operating with 4 channels between 50 and 54 GHz. This makes it feasible to address the most important and difficult system issues relevant to an operational 2-D system and to use mature MMIC receiver technology and components. The physical configuration is a Y shape, with 8 elements in an arm with about 3.5-wavelength element spacing (2 cm) as required for a GEO system. The system incorporates similar calibration and LO subsystems and distribution schemes as the operational instrument. The prototype correlator is being developed at the University of Michigan based on current related work with other synthetic aperture systems. A standard personal computer (PC) is used for the data collection and instrument control. A sketch of the system is shown in Fig. 4 and a block diagram is shown in Fig. 5.

The 24 receiving elements are arranged in a modified form of the Y-formation described above – this is shown in 6, which also shows the uv sampling points obtained with this array. Each arm is a single physical module containing a linear array of 8 receiving elements combined with a signal multiplexer. It is envisioned that larger arrays will be formed by combining a number of such modules end to end. Fig. 6 shows the antenna array and illustrates an innovative staggered arrangement that makes it possible to transfer phase measurements between the arms.

Each element receives RF energy through a feedhorn, and Fig. 7 is a photo of a parabolic Potter horn design that has been implemented. Other designs were also evaluated, such as the linear taper next to the Potter horn. Laboratory measurements showed that the Potter

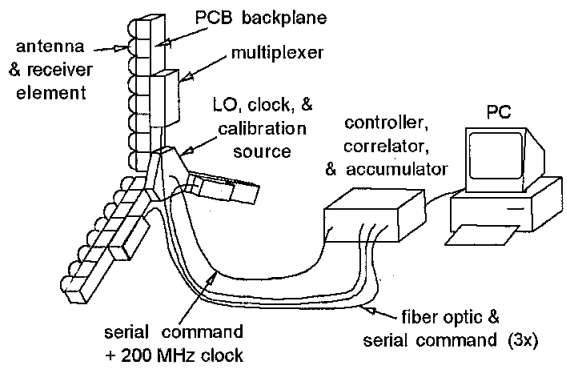

Fig 4. Prototype GeoSTAR configuration

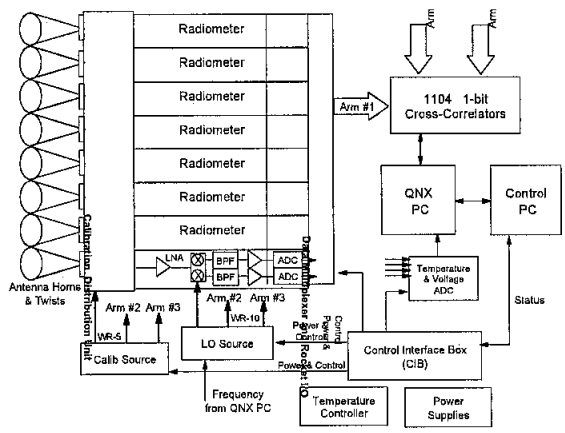

Fig 5. Receiver system block diagram

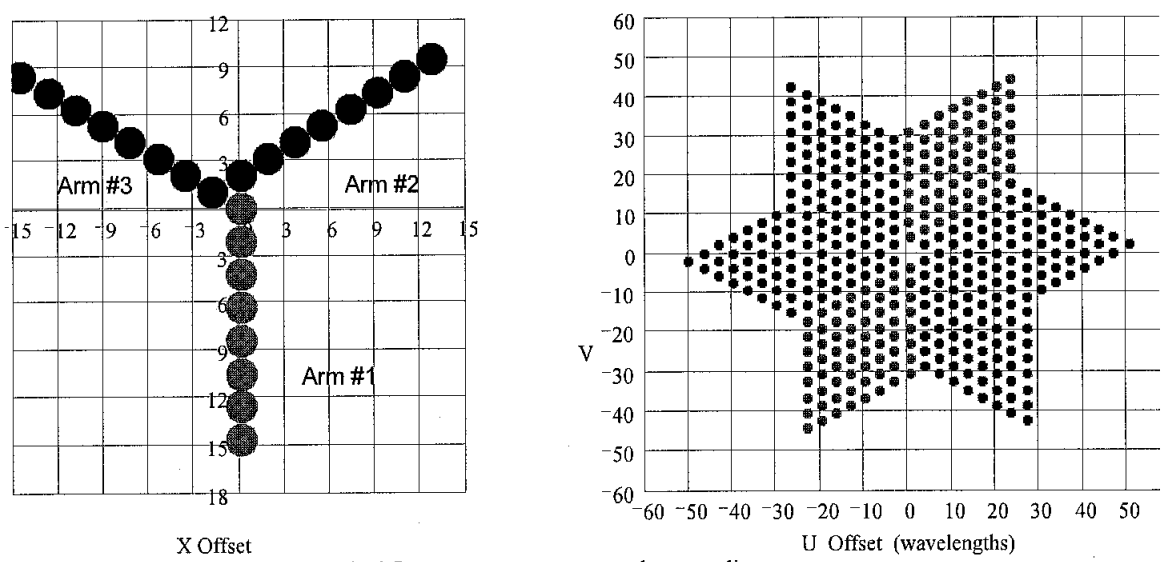

Fig 6. Prototype antenna array and uv sampling pattern

horn is superior to other designs in terms of mutual coupling between neighboring horns, which must me minimized. The receivers are miniature I/Q mixer designs using low noise amplifiers as a first stage and utilizing MMIC technology. The physical layout of a prototype 50-GHz receiver is illustrated in the photos in Fig. 8.

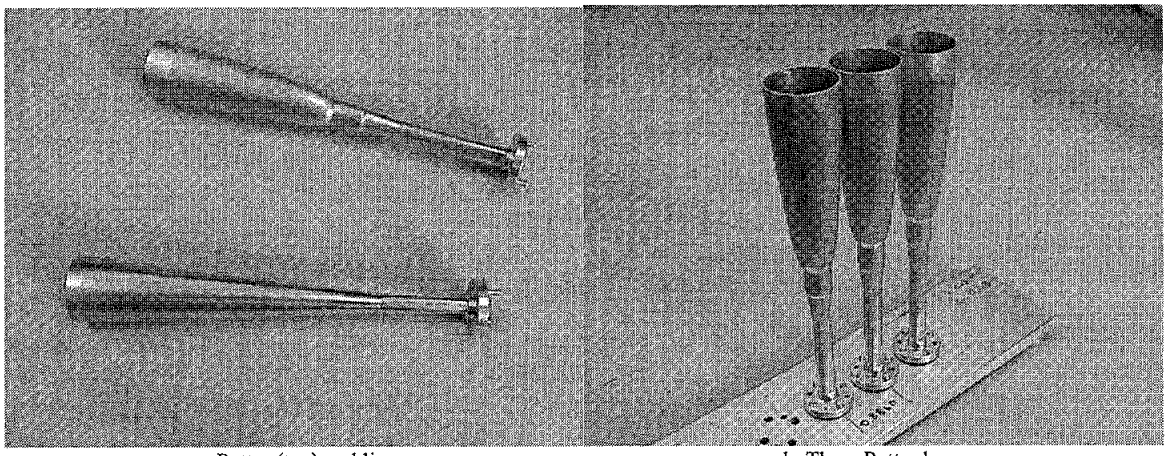

a. Potter (top) and linear b. Three Potter horns

Fig 7. Prototype feedhorns

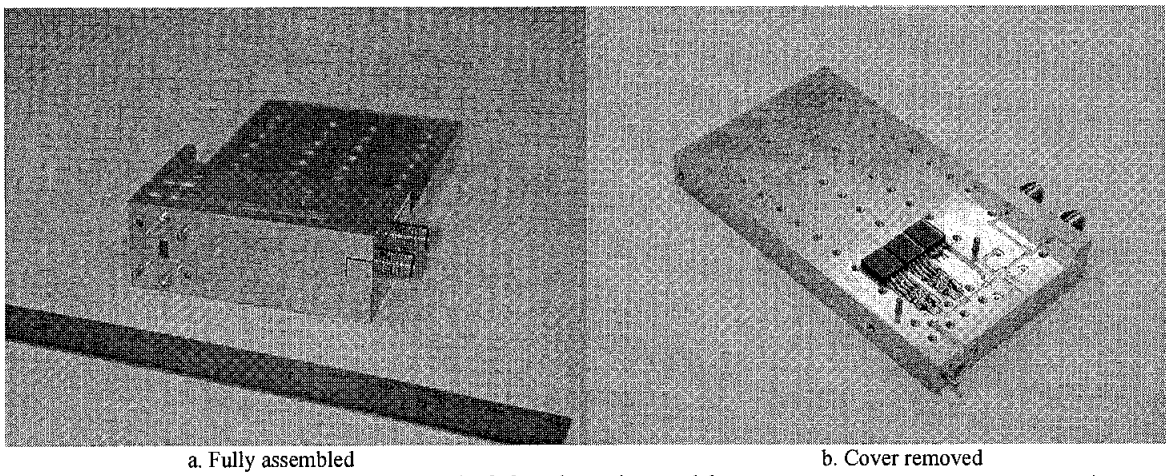

a. Fully assembled b. Cover removed

Fig. 8. Sample receiver module

The receivers utilize subharmonic mixers that produce real and imaginary components of a 100 MHz wide baseband IF signal. The local oscillator signal, which is distributed to all units from a single central source, operates at about 25 GHz for the 50-GHz sounding band. Channel selection is done by switching the local oscillator frequency.

The multiplexer, illustrated in Fig. 9, is used to collect the output signals from the receivers and to distribute synchronization signals and commands. One example of a command is to disable the first-stage amplifier and enable the internal noise source for calibration measurements. Most of the multiplexer functions are performed in a field programmable gate array (FPGA) integrated circuit.

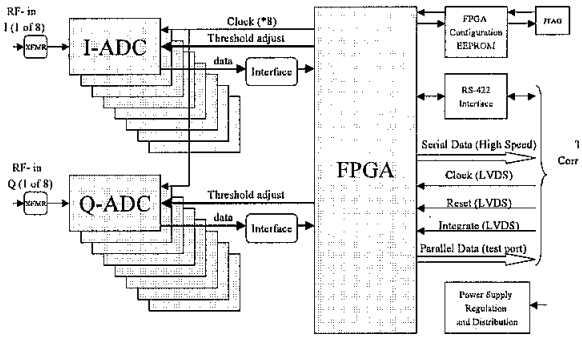

Fig 9. Signal multiplexer

Perhaps the most important subsystem is the correlator, which must perform multiplications of all 100-MHz signal pairs in real time. The correlator for the GeoSTAR prototype is shown schematically in Fig. 10, and its interfaces with the rest of the system are shown in Fig. 11. For an operational system with 100 elements per arm, as discussed above, that requires on the order of 20 trillion multiplications per second. (The prototype system requires substantial lower bandwidth, however.) To achieve such a high processing rate with a reasonable power consumption, the correlators are implemented as 1-bit digital multiply-and-add circuits, using a design developed for the University of Michigan. The correlator for the GeoSTAR prototype, where low cost is more important than low power consumption, this design will be implemented in FPGAs, while an operational system will use low-power application specific integrated circuits (ASICs).

A command and data handling (C&DH) subsystem is used to control the prototype and collect and store the data generated by it during testing. It is illustrated in Fig. 12.

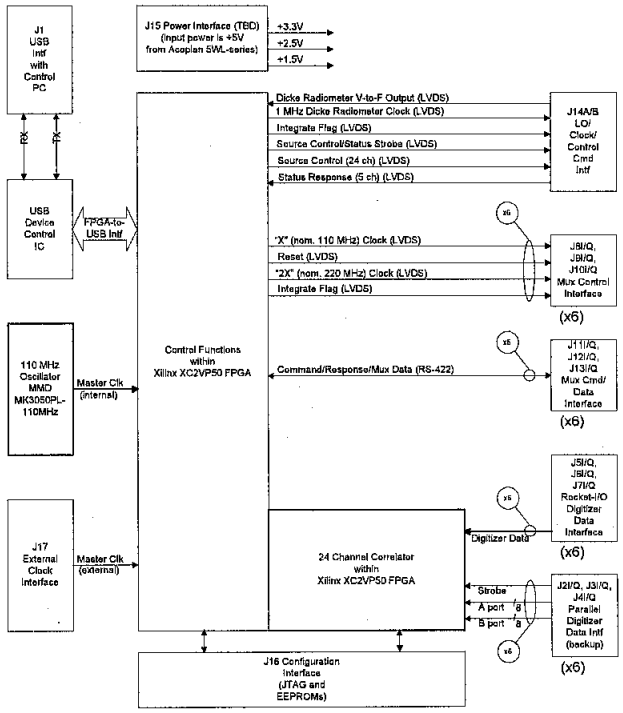

Fig 10. Correlator

6. SPACE MISSION STUDIES

The Office of System Development, which manages the development of new weather satellite systems for NOAA, has expressed strong interest in GeoSTAR. NOAA is now in the process of developing and procuring the next generation of geostationary weather satellite system, called GOES-R, to be first launched in 2012. Incorporating a microwave sounder in that system has become a high priority, and the GOES-R Product Requirements Document now lists such an instrument as a high priority goal. Two alternative approaches are being considered – the synthetic-aperture approach and the real-aperture. It is likely that one will be chosen for implementation in the relative near future, perhaps in time for the second set among the GOES-R series – now thought to be around 2015. GeoSTAR has many advantages over a real-aperture system. Chief among those is that there are no moving parts to disturb the platform – platform disturbances are undesirable due to the ultra high resolution imagers that are usually carried on GOES platforms, and the effective aperture can easily be expanded to meet growing needs for higher spatial resolution in the future. GeoSTAR also has the advantage that full-disk imaging takes place continuously. Although it takes 30-60 minutes to accumulate enough measurements to achieve the necessary radiometric sensitivity, this is formed from a series of "snap shots" of less than a minute in duration. The 30-60 minute period may be viewed as a ground data processing "window" that can be stepped forward at intervals as small as a minute. GeoSTAR therefore has potentially a very high temporal resolution, where short temporal signal can be recovered through standard image processing techniques. Finally, since GeoSTAR operates in the spatial Fourier

Table 1. GeoSTAR vs. real-aperture systems

Feature	GeoSTAR	Real-Aperture
Aperture size	Any size	Limited
Scanning	No scanning	Mech. scanning
Spatial coverage	Full disk	Limited
Spectral coverage	One array: one band	One antenna: all bands
Accommodation	Easy	Difficult
Power consumption	'03: high; '08: low	Moderate
Platform disturbance	None	High
Technology risk	High	Moderate
Failure mode	Gracefully degrade	Catastrophic loss

domain, it is relatively insensitive to the loss of one or more receivers – the impact of such a loss is some degradation in image quality, but there is no catastrophic loss of capabilities as there would be for a real-aperture system. Table 1 summarizes this in a comparison between GeoSTAR and real-aperture systems.

There is of course substantial technology risk associated with GeoSTAR, as reflected in Table 1, but the prototyping effort described here will retire much of that risk by demonstrating the measurement and calibration approach and by developing much of the technology needed for a space mission. In addition, we have worked with a team from Ball Aerospace to study mechanical and thermal design and accommodation issues for a space mission. A large concern has been that the large thermal swings that can be expected from solar radiation could induce array distortions that would in turn cause large phase errors. Fig. 11 shows the projected worst-case diurnal temperature swings, where the solar beta angle is –23.5°. The dark plots indicate the temperature at various point sin the GeoSTAR array if no measures were taken to mitigate solar heating and cooling. The light shaded curve indicates the result when a heat pipe and passive radiator are used. In that case, the mechanical distortions due to thermal effects are well within the GeoSTAR tolerances for maintaining phase stability throughout the system.

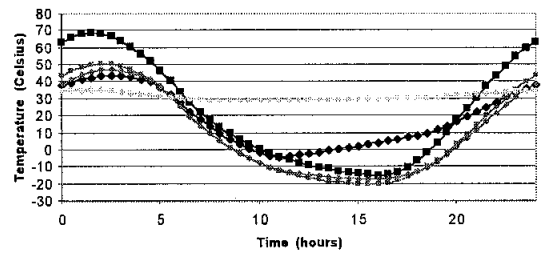

Fig 11. Projected temperature swings in GEO at various points in the GeoSTAR array (Ball Aerospcae)

The Ball Aerospace study also addressed how a large array can be designed as a deployable system that easily fits on common launch vehicles. In the example illustrated in Fig. 12 a GeoSTAR system with 2-meter array arms (i.e. with an effective nominal aperture of 4 meters) is folded during launch and then deployed on orbit. These studies are continuing, to address how efficient packaging approaches for multiple arrays.

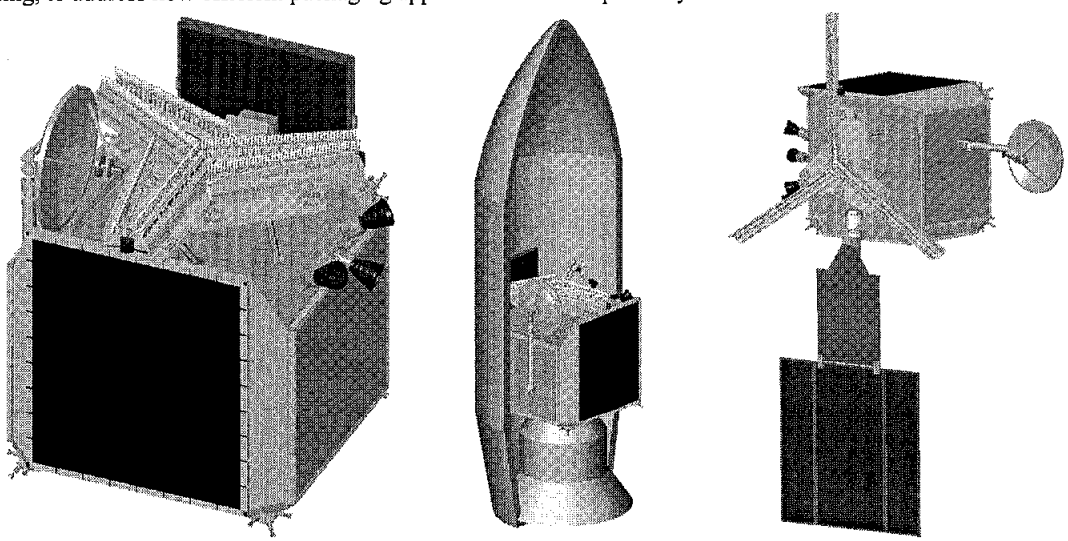

a. Array arms folded b. Stowed in Delta II c. Deployed on-orbit

Fig 12. GeoSTAR space configuration studies (Ball Aerospace)

7. CONCLUSIONS

The technology elements required for an operational GeoSTAR are relatively mature. For example, MMIC chips required for 50-GHz miniature low-power receivers are available commercially off the shelf. Low noise amplifiers up to 200 GHz are also maturing rapidly. The same is the case for correlator integrated circuits, where technology

developed for miniature low-power consumer and communications electronics can be leveraged. 2-bit multipliers that operate at 225 GHz have been demonstrated at 1 mW per correlation, and 3-level (1.5-bit) circuits operating at 500 Mhz have been demonstrated at 0.5 mW per correlation. These numbers can be projected to 0.1 –0.2 mW per 1-bit correlation using the same chip technology. We expect this to decline well below 0.1 mW per 1-bit correlation within 2-3 years. At that level, the corelator subsystem for the 100 elements per arm example discussed above would consume less than 20 W – an almost trivial amount for today's satellite systems. The current challenge, where the GeoSTAR prototype is intended as a risk reduction effort, is in terms of system development and integration. Although several efforts have been under way for some time to develop 2-dimensional aperture synthesis systems, none has been demonstrated to date.

REFERENCES

[1] From N. Grody, in "Atmospheric Remote Sensing by Microwave Radiometry" (M. Janssen ed.), Wiley, 1993

[2] D. Staelin & F. Chen, "Precipitation observations near 54 and 183 GHz using the NOAA-15 satellite", IEEE Trans. Geosci. Rem. Sens., **38**, 2322-32 (2000)

[3] A. Camps et al., "The processing of hexagonally sampled signals with standard rectangular techniques: Application to 2-D large aperture synthesis interferometric radiometers", IEEE Trans. Geosci. Remote Sens., **35**, 183-190 (1997)

ACKNOWLEDGMENTS

This work was carried out at the Jet Propulsion Laboratory, California Institute of Technology under a contract with the National Aeronautics and Space Administration