Session 3/3?

Verification vs Space Missions

Title

Overview of Mars Science Laboratory (MSL) Environmental Program

John C. Forgrave - Kin F. Man - Alan R. Hoffman

Speaker: John C. Forgrave (john.c.forgrave@jpl.nasa.gov)

Jet Propulsion Laboratory, California Institute of Technology
4800 Oak Grove Drive, Pasadena, California 91109, USA

Agenda

- Mission and Flight System
  - Mission Objectives
  - Spacecraft and Rover Description
- Environmental Program and Verification
  - Environmental Program Objectives
  - Environmental Testing and Analyses
- Environmental Challenges for MSL
  - Several System Configurations
  - Packaging Life Qualification
  - Pyroshock
  - Electromagnetic Compatibility (EMC)
- Summary and Conclusions

Mission Objectives

Engineering Objectives

- Mobile Science Laboratory one Mars Year surface operational lifetime (670 Martian sols = 687 Earth days)
- Be able to land and operation over wide range of latitudes, altitudes and seasons
- Controlled propulsive landing
- Demonstrate improved landing precision via guided entry

General Science Objectives

- Mission science will focus on Mars habitability
- Perform next generation analytical laboratory science investigations
- Perform remote sensing/contact investigations
- Carry a suite of environmental monitoring instruments

Specific Science Objectives

- Characterization of geological features, contributing to deciphering geological history and the processes that have modified rocks and regolith, including the role of water.
- Determination of the mineralogy and chemical composition (including an inventory of elements such as C, H, N, O, P, S, etc. known to be building blocks for life) of surface and near-surface materials.
- Determination of energy sources that could be used to sustain biological processes.
- Characterization of organic compounds and potential biomarkers in representative regolith, rocks, and ices.
- Determination the stable isotopic and noble gas composition of the present-day bulk atmosphere.
- Identification potential bio-signatures (chemical, textural, isotopic) in rocks and regolith.
- Characterization of the broad spectrum of surface radiation, including galactic cosmic radiation, solar proton events, and secondary neutrons.
- Characterization of the local environment, including basic meteorology, the state and cycling of water and CO2, and the near-surface distribution of hydrogen.

MSL Rover

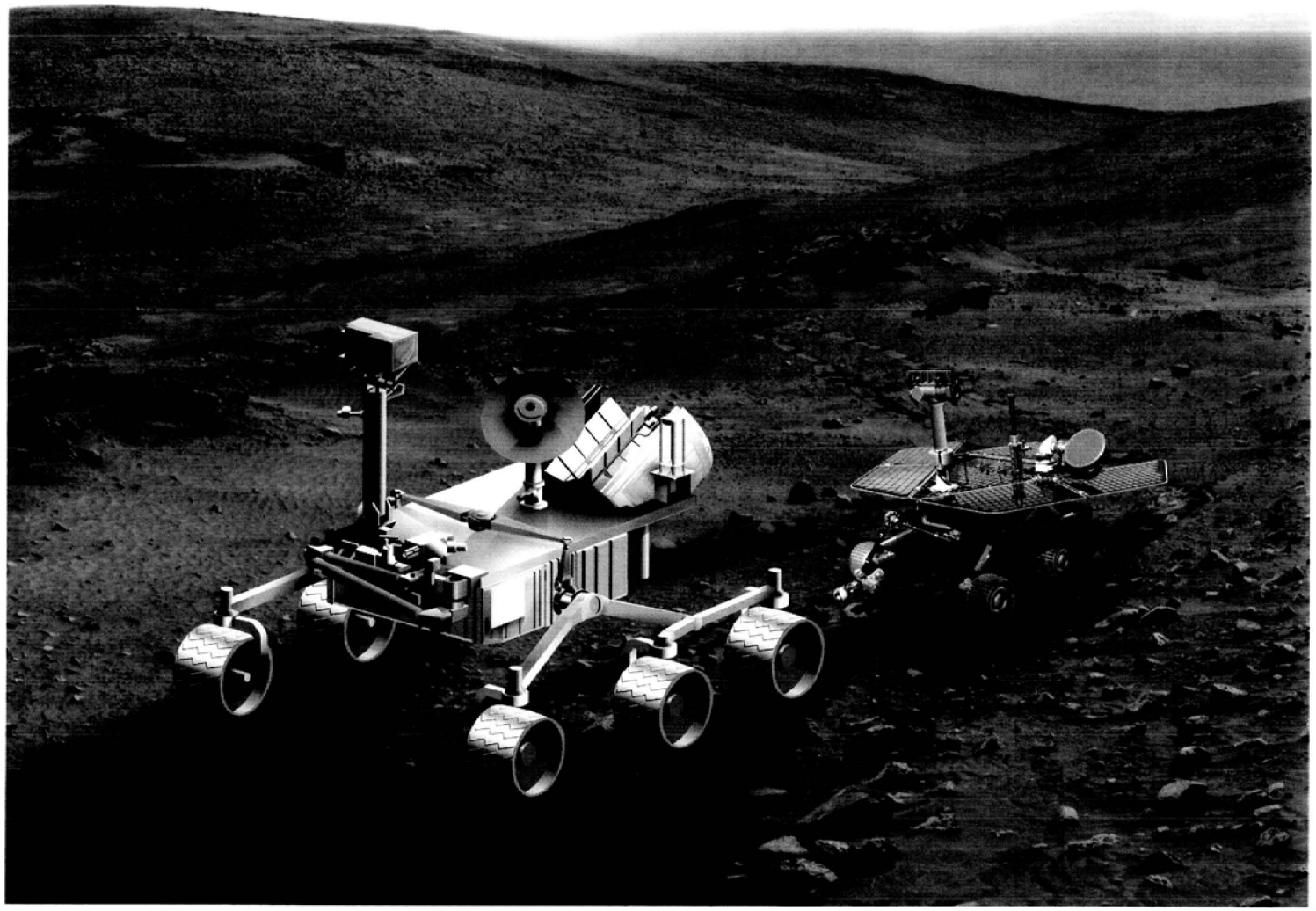

MSL Size Comparisons

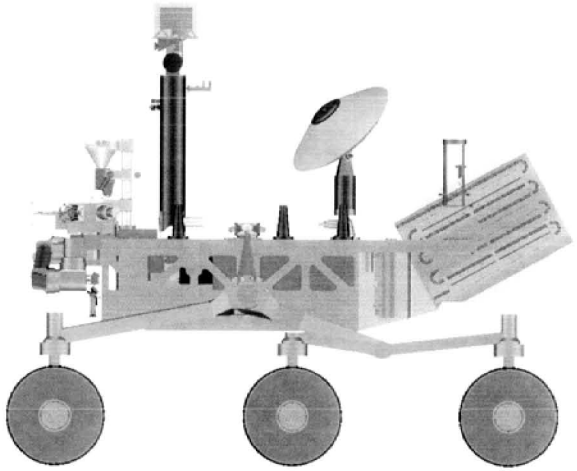

JPL 2009 MSL Rover

MINI 2005 MINI Cooper S

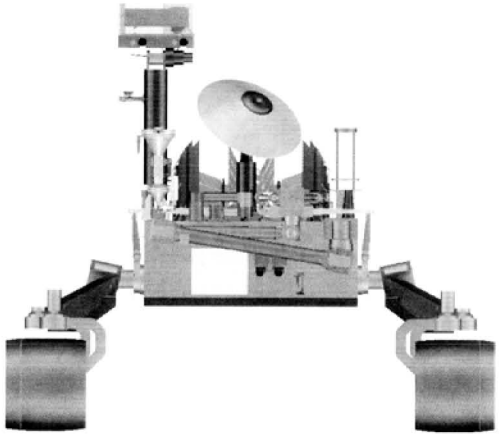

Launch Configuration

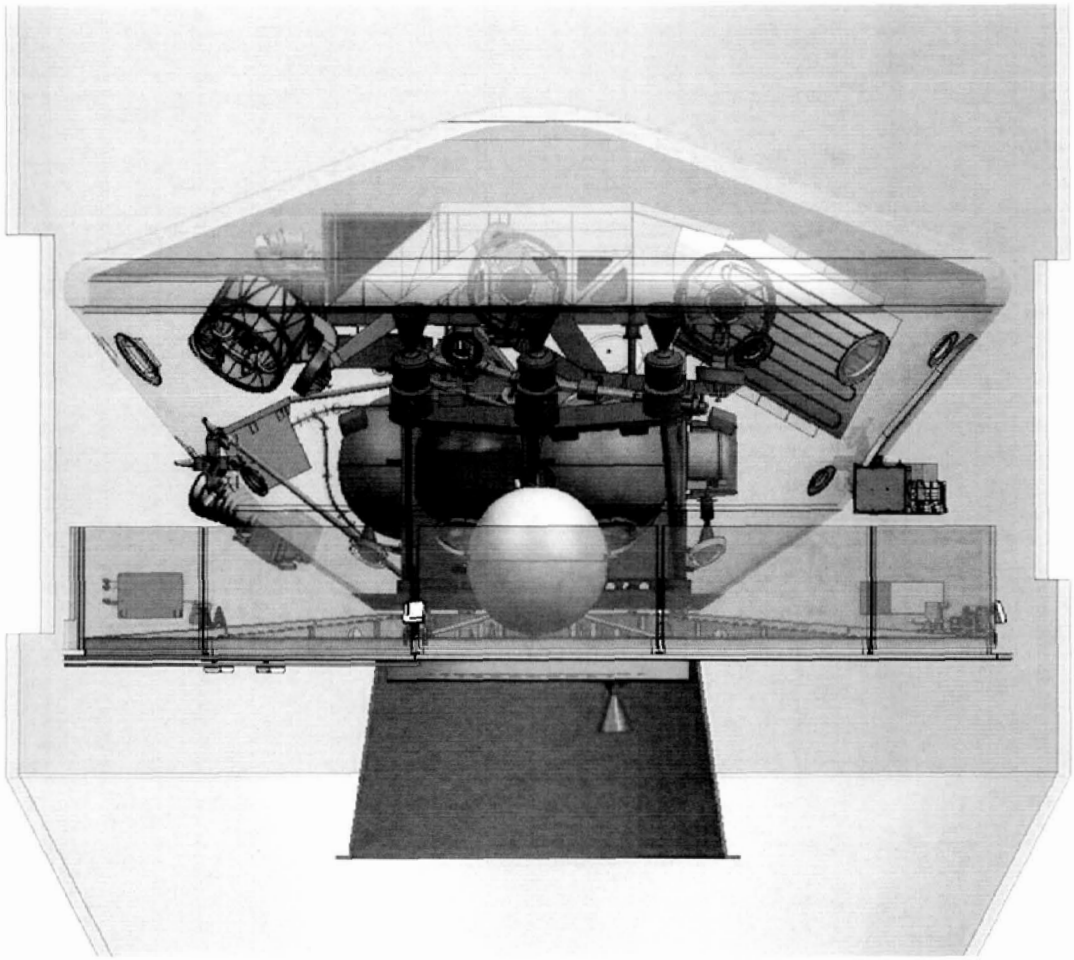

- 5m Fairing with 4.65 m internal envelope.
- 1.68 m payload interface to MSL Spacecraft.

Cruise Configuration

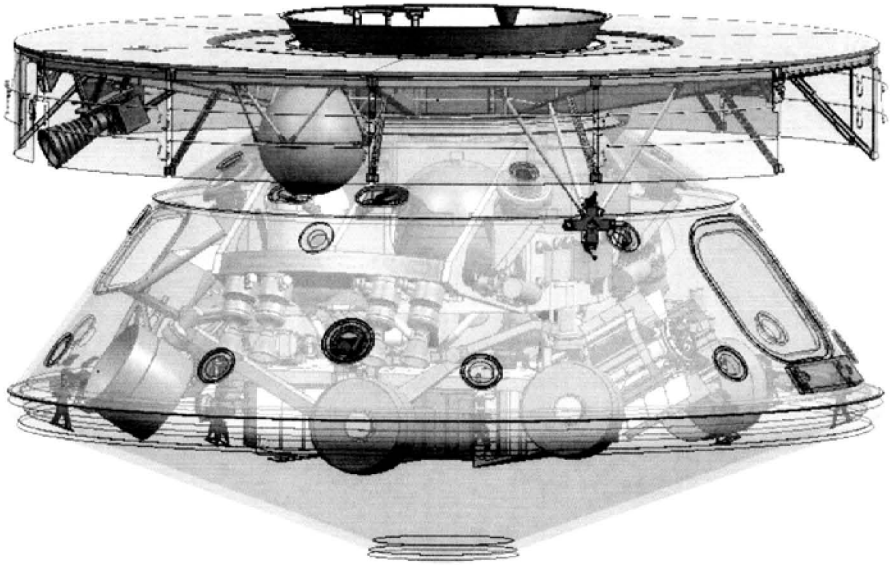

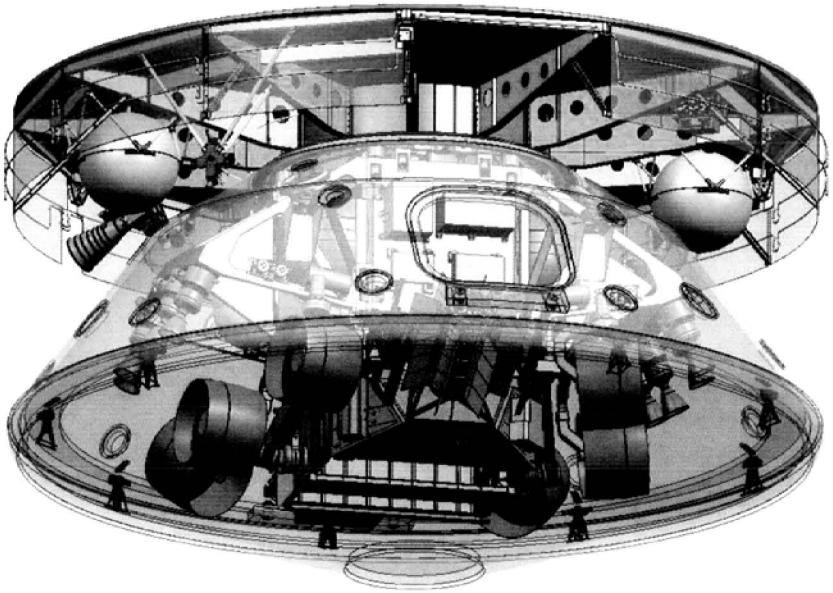

- Cruise Mission Time = 9 months (TBR)
- Launch of Delta IV or Atlas V class Vehicle

Powered Descent Vehicle (deployed)

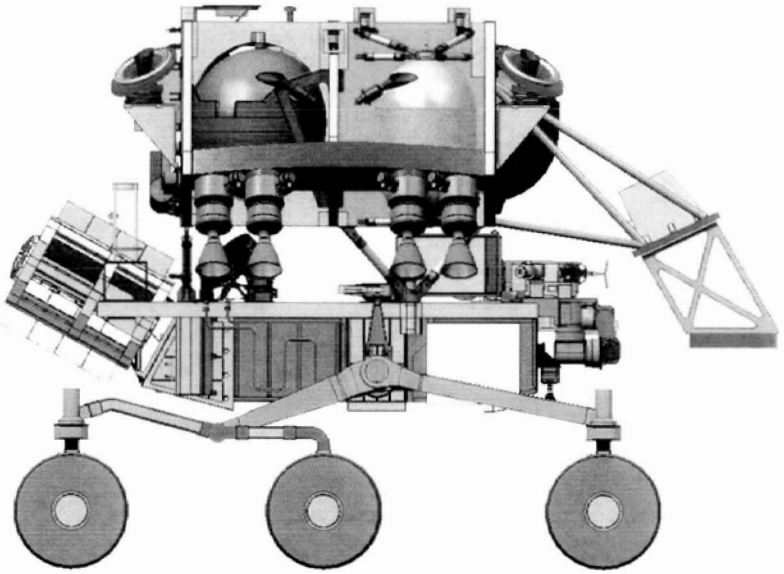

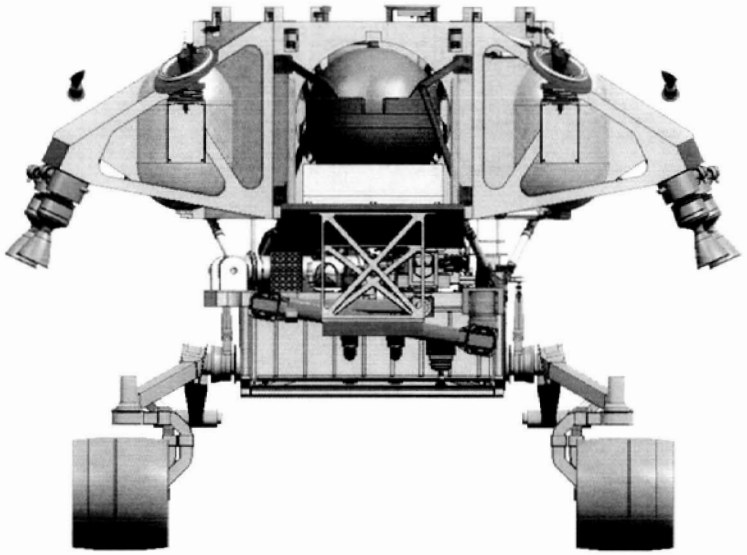

Sky Crane Landing

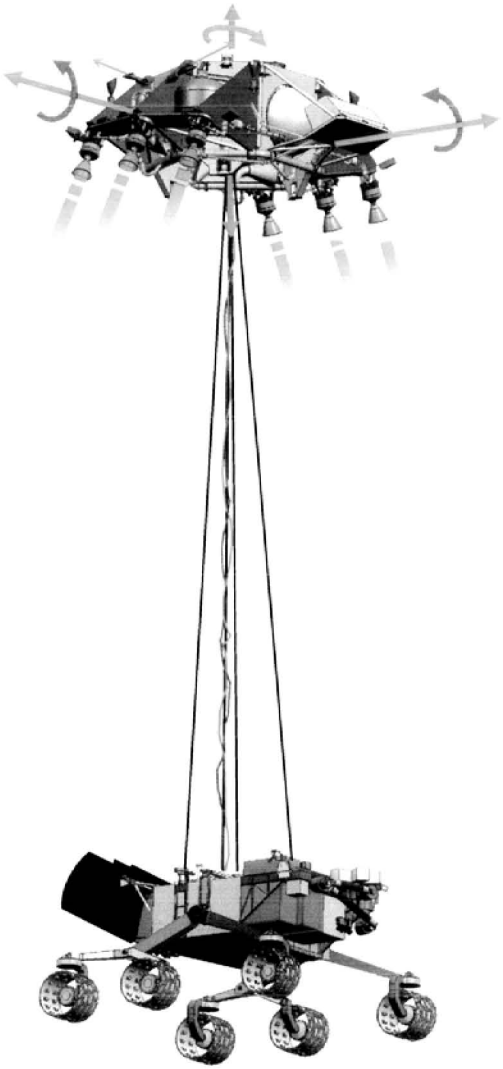

Rover System

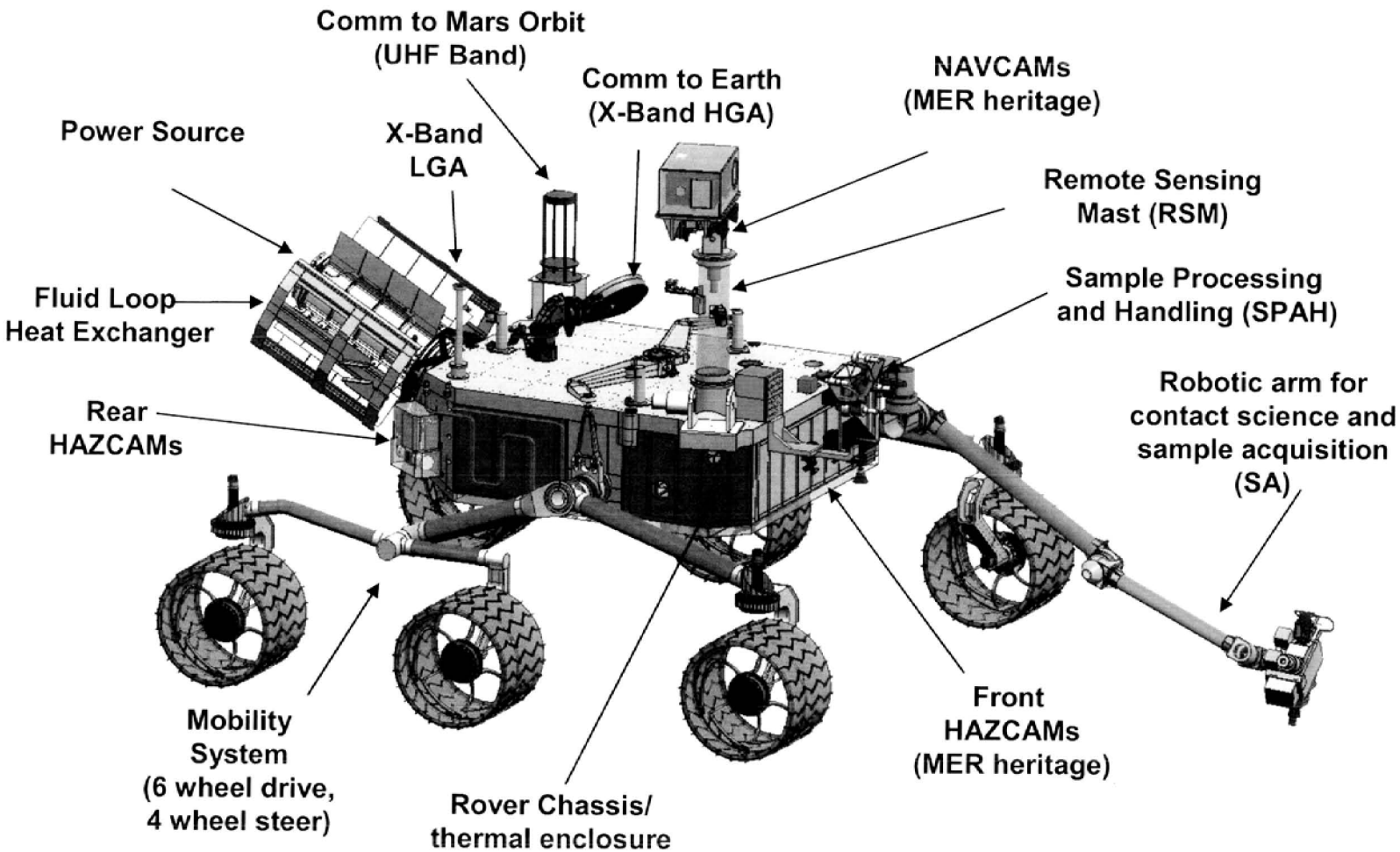

Environmental Program Objectives

- Ensure the flight hardware design is capable of surviving all the environments throughout its mission life time.
  - Includes ground, transportation, launch, cruise, entry decent & landing (EDL) and surface operation environments.
- Verify environmental testing and analysis have adequately validated the flight hardware's ability to withstand all natural, self-induced, and mission-activity-induced environments.

Assembly/Subsystem Testing

- Dynamic tests
  - Random vibration (include frequency survey)
  - Quasi-static loads (entry, landing)
  - Pyroshock
  - Acoustic noise (selected - large area/mass)
  - Sine sweep (grinding/drilling)
- Thermal tests
  - Thermal vacuum
  - Multipacting/ionization breakdown (corona)
  - Thermal cycling (selected - fatigue life qual)
- EMC tests
  - Conducted susceptibility/emission
  - Radiated susceptibility/emission
  - Grounding & isolation
- Environmental analyses
  - Radiation (TID, DD, SEE)
  - Venting (pressurization & depressurization)

Spacecraft System Testing

- Dynamic tests
  - Low-level random survey
  - Random vibration
  - Quasi-static loads (Launch/entry)
  - Acoustic noise
  - Pyro firing
- Thermal tests
  - Thermal vacuum (w/ thermal balance - critical h/w at FA limits during functional)
- EMC tests
  - Radiated emission
  - Radiated susceptibility
  - Self compatibility
- Environmental analyses
  - Orbital debris
  - Meteoroid (survival & shielding)
  - ESD (touch down)

Environmental Considerations Unique to MSL

- Several System Configurations
  - Need to test in the appropriate configuration for each environment
- Severe Thermal Cycling Environment
  - 145°C delta per sol, 670 sols, qual to 3x cycles = 2010 cycles
  - Much more severe that NASA Cycles (200 cycles from +100°C to -55°C)
- Severe Pyro-Shock Environment
  - Approximately 50 pyro-devices fire during EDL for unlatching, cable cutting ect.
  - Levels are high because sensitive assemblies cannot be moved away from all devices
- Many potential EMC issues
  - X-Band, UHF and Landing Radar and several other "noisy" sources can interfere with sensitive hardware.

Environmental Challenges – Several System Configurations

- Launch and Cruise Configuration
  - Random Vibration
  - Acoustic Vibration
  - Launch Vehicle Separation Pyro-Shock
  - Cruise Thermal Vacuum
  - EMC (Launch and Cruise Requirements)

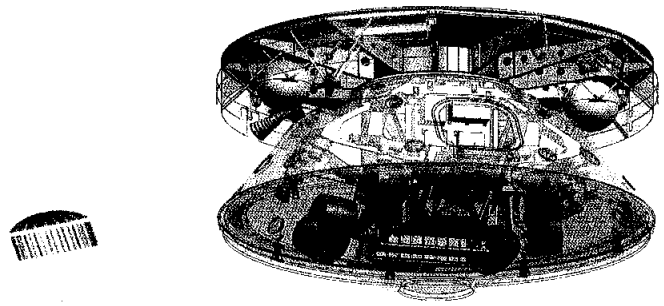

- EDL Configurations
  - Quasi-static loads
  - Pyro-Shock
  - Corona and Multi-pacting
  - EMC (EDL Requirements)

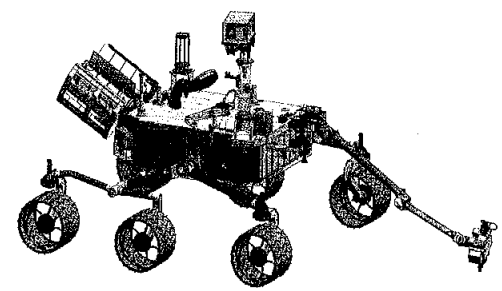

- Surface Operations
  - Thermal Martian Atmosphere (+70°C to -135°C, 7 torr LN2)
  - EMC (Thorough Rover Self-Compatibility Test)

Environmental Challenges - Packaging Life Qualification

- Extreme Thermal Cycling Environment for outside mounted equipment
  - 145°C delta per sol, 670 sol mission
  - Packaging Qualification 3x cycles =2010 cycles
    - 1005 cycles (-130°C to +15°C) and 1005 cycles (-105°C to +40°C)
    - Simulates Martian summer and winter
- Much more severe that NHB 5300 Cycles (200 cycles from +100°C to -55°C)
  - All of our "packaging techniques" qualified for previous missions are not qualified for MSL
  - All packaging techniques for outside mounted hardware should be qualified
    - Cost is prohibitive
    - Currently determining what to test and what not to test

Environmental Challenges - Pyroshock

- Approx. 50 pyro devices through out the spacecraft will fire during EDL
  - All hardware will be close to some device.
  - Pyro shock environment is extremely high and affects all hardware.
- Currently developing levels and zones based on current design.
- Need to determine what assemblies are at risk and work issues one by one.
  - Make assembly more robust
  - Use pyro device with lower shock rating
  - Shock isolate assembly from pyro device
  - Iterate design until all assemblies will survive.

Environmental Challenges - Pyroshock

- Issues with assembly level pyro shock testing - (Approx. 120 assemblies to test)
  - Shaker simulated shock falls off above 3000 Hz
  - Hard to control a resonant plate or resonant beam test
  - Real pyro firings produce different shock spectra firing to firing
  - Need to determine our test methods and criteria for a proper test.
- Final verification will be to fire all devices on built up systems
  - Positive verification does not occur until system level testing
  - Different combinations of built up systems will be used (i.e. DTMs, EM units, Flight units). All assemblies need to be exposed their highest shock load.

Environmental Challenges - EMC

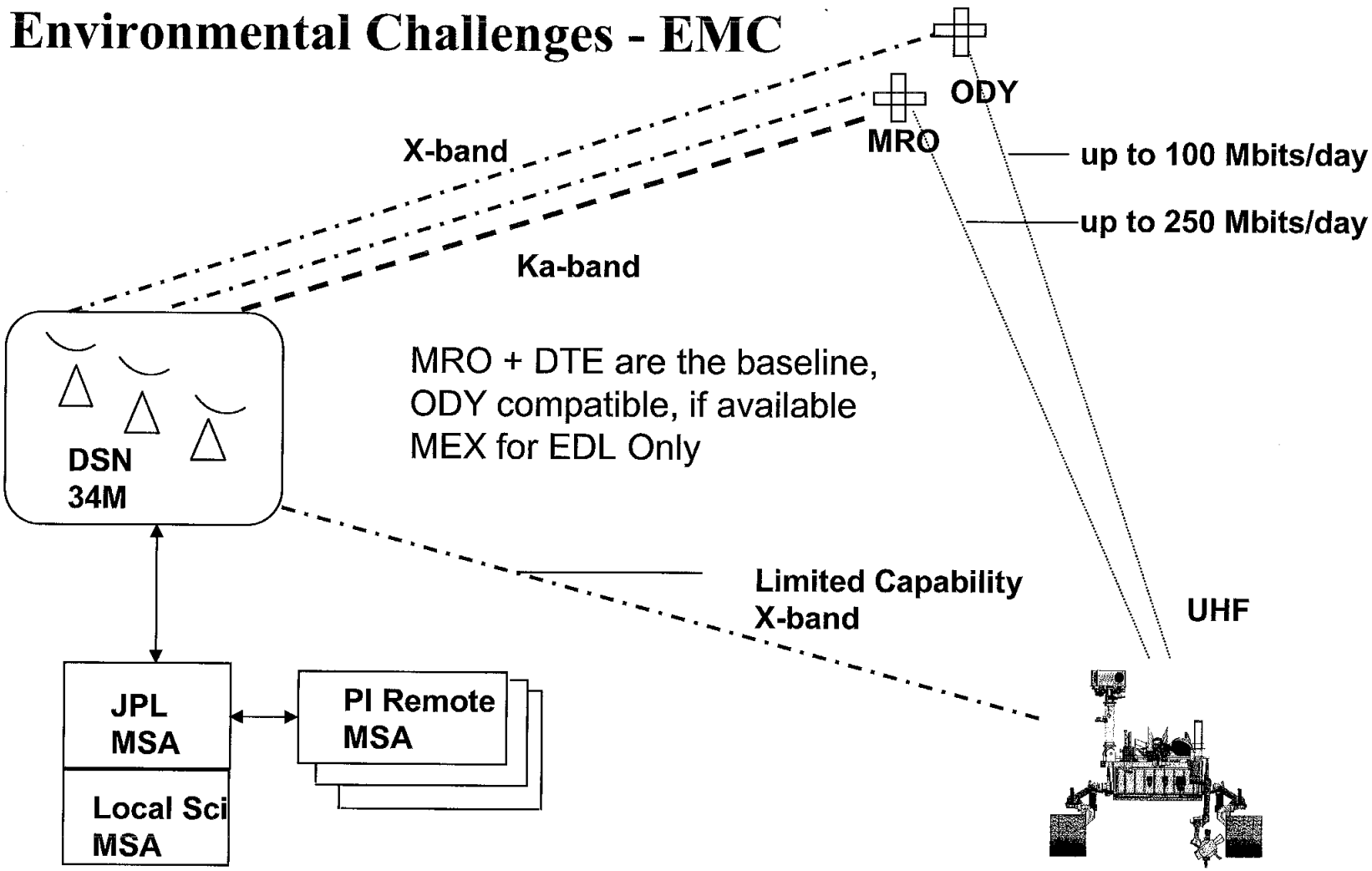

Environmental Challenges - EMC

MSL has a high number of Radiated Emission Sources which may impact sensitive UHF receivers and science instruments.

- Motors - Power Converters - Data Transmitters - Radar - etc.

Mitigation:

- A special EMC Control Plan is being written for MSL.
- Currently performing development testing on data bus architectures and harness treatments.
  - Plan to adopt test result information into the early design process.
- Gather information and make design recommendations as needed.
  - Obtain frequency list of all MSL hardware
    - power converters – clocks – data circuits - receivers – transmitters - etc.
  - Evaluate and specify cabling design guidelines
    - shielded - twisted pair - etc.
  - Make a system/assembly grounding diagram.
  - Producing a "Sources – Victims" matrix to track EMC issues
- Perform early preliminary EMC testing on site for vendor hardware.
- Create flight rules prohibiting "noisy" operations during UHF signal receiving.

Summary and Conclusions

- Several Environmental Testing Challenges for MSL
  - Several System Configurations for Testing
  - Packaging Qualification for very severe thermal cycling environment
  - Severe and complex Pyro-Shock environment
  - Many potential EMC issues

Back-Up Slides

Event Timeline 1 of 2

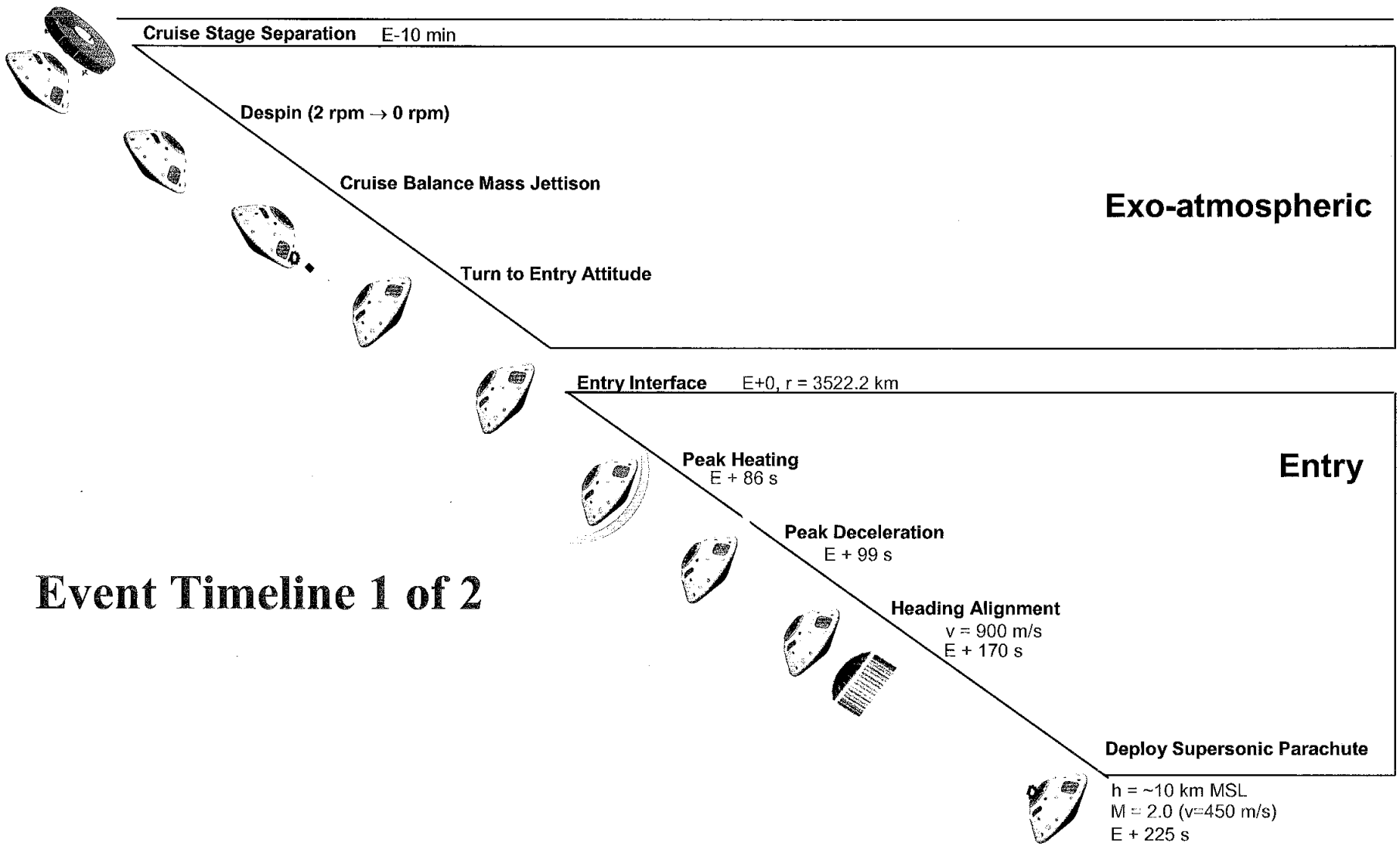
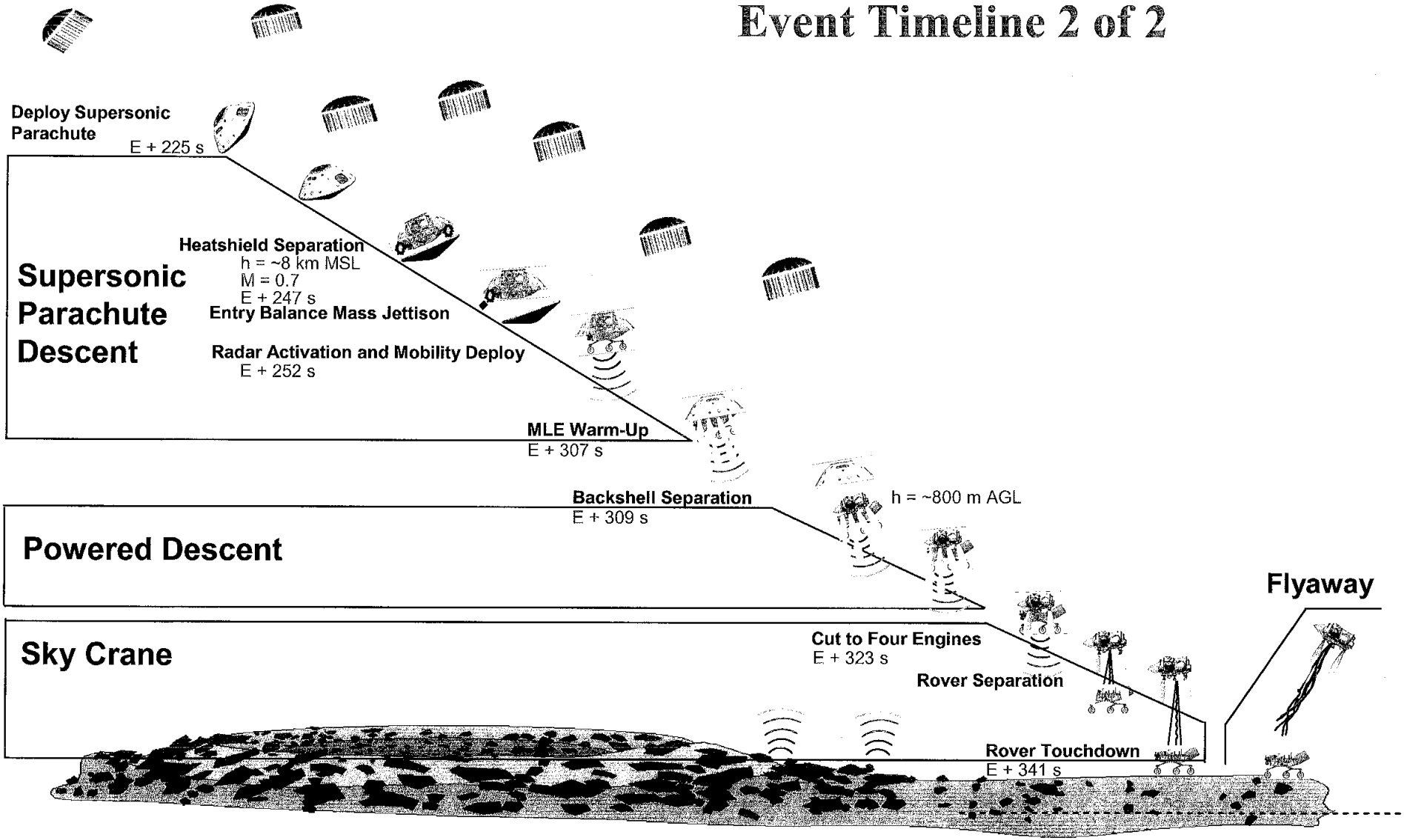
Event Timeline 2 of 2