A Martian Telecommunications Network: UHF Relay Support of the Mars Exploration Rovers by the Mars Global Surveyor, Mars Odyssey, and Mars Express Orbiters

C. D. Edwards, Jr.[1], A. Barbieri[1], E. Brower[1], P. Estabrook[1], R. Gibbs[1], R. Horttor[1], J. Ludwinski[1], R. Mase[1], C. McCarthy[2], R. Schmidt[2], P. Theisinger[1], T. Thorpe[1], B. Waggoner[1]

[1]Jet Propulsion Laboratory, 4800 Oak Grove Dr., Pasadena, CA 91109, USA
[2]European Space Agency, 8-10 rue Mario Nikis, 75738 Paris Cedex 15, France

Abstract

*NASA and ESA have established a*n international network of Mars orbiters, outfitted with relay communications payloads, to support robotic exploration of the red planet. Starting in January, 2004, this network has provided the Mars Exploration Rovers with telecommunications relay services, significantly increasing rover engineering and science data return while enhancing mission robustness and operability. Augmenting the data return capabilities of their X-band direct-to-Earth links, the rovers are equipped with UHF transceivers allowing data to be relayed at high rate to the Mars Global Surveyor (MGS), Mars Odyssey, and Mars Express orbiters. As of 21 July, 2004, over 50 Gbits of MER data have been obtained, with nearly 95% of that data returned via the MGS and Odyssey UHF relay paths, allowing a large increase in science return from the Martian surface relative to the X-band direct-to-Earth link. The MGS spacecraft also supported high-rate UHF communications of MER engineering telemetry during the critical period of entry, descent, and landing (EDL), augmenting the very low-rate EDL data collected on the X-band direct-to-Earth link. Through adoption of the new CCSDS Proximity-1 Link Protocol, NASA and ESA have achieved interoperability among these Mars assets, as validated by a successful relay demonstration between Spirit and Mars Express, enabling future interagency cross-support and establishing a truly international relay network at Mars.

1 Introduction

The Mars Exploration Rover "Spirit" arrived at Mars on January 4, 2004 and began an extended period of robotic geological investigations of the Gusev Crater landing site. Three weeks later on January 25th, the second rover, "Opportunity", completed a successful landing in the Meridiani Planum and initiated similar investigations of this hematite-rich region. During the arrival and surface operations of each rover, an international network of science orbiters from NASA and ESA has provided the rovers with telecommunications relay services, significantly increasing engineering and science data return while enhancing mission robustness and operability. In this paper we describe this relay infrastructure and its use in supporting the Spirit and Opportunity rovers.

Section 2 provides an overview of the MER mission, summarizing the science goals of the mission and the role of communications in achieving those goals, and outlining the telecommunications design of the rovers. Section 3 reviews the capabilities of the MGS, Odyssey, and Mars Express spacecraft, representing the Mars relay infrastructure available for support of the Spirit and Opportunity rovers. Section 4 provides a more detailed description of the UHF link characteristics for MER relay support. Section 5 describes the critical event communications strategy during MER entry, descent, and landing, with an emphasis on the use of the MGS UHF relay link during EDL. Section 6 examines the use of relay links during MER surface operations and summarizes data return over the UHF and direct-to-Earth link. Section 7 will summarize the successful demonstration of interoperability conducted by Spirit and Mars Express, establishing the potential for future interagency cross-support based on a standardized link-layer protocol. Finally, Section 8 will conclude with a number of preliminary lessons-learned.

2 MER Mission Overview

The Mars Exploration Rover (MER) Project had the primary objective of placing two identical mobile science laboratories on the surface of Mars to conduct geologic investigations, including characterization of a diversity of rocks and soils that may hold clues to past water activity. Spirit and

Opportunity were launched on 10 June, 2003 and 8 July, 2003, and successfully landed just three weeks apart, on 4 January and 25 January, 2004, respectively.

The roughly seven-month cruise consisted primarily of routine engineering housekeeping activities and navigation. Notable exceptions were the checkout of engineering subsystems required for EDL and surface operations, including the UHF subsystem, and a partial dress rehearsal on 13 October 2003 of the EDL phase. The latter demonstrated key elements of the MER mission control and telecom operations with the DSN. The flight team also conducted a number of operational readiness tests during cruise as training for EDL and surface operations. These many tests simulated operations in incrementally increasing complexity such that the team had hands-on experience with the data flows, tools, processes, and procedures by the time of EDL.

In the original design of the mission, data from the rovers could be returned to the Deep Space Network (DSN) via direct-to-Earth (DTE) X-band, or sent via UHF to the Mars Global Surveyor (MGS) or Mars Odyssey (ODY), which would subsequently relay those data back to Earth via their X-band telecom subsystems.

The UHF communication path played four important roles on MER:

1. *Critical Event Telemetry:* During the latter part of the highly dynamic descent and landing phase, each MER spacecraft augmented its low-rate X-band direct-to-Earth EDL telemetry with 8 kbps UHF transmissions to the MGS spacecraft.
2. *Surface Operations Data Return:* The MGS and Odyssey orbiters overflew each landing site up to four times per sol, twice in the early morning and twice in the afternoon. Early in the mission, when energy was plentiful, each rover would typically use the higher one of the pair of morning MGS relays and the higher one of each pair of morning and afternoon ODY relays, significantly augmenting returned data volume relative to the capability of the X-band DTE link.
3. *Rover Position Determination:* Measurement of the Doppler shift observed on the two-way UHF link between each rover and Odyssey provided an accurate *in situ* determination of the rover position [Guinn and Ely, 2004].
4. *NASA-ESA Interoperability Demonstration:* MER's mission goals included a demonstration of forward and return link telecommunications with Mars Express to validate the CCSDS-compatible link protocols that enable an international Mars relay infrastructure.

After deployment and checkout periods that lasted less than two weeks each, both Spirit and Opportunity set out to explore their respective landing areas on opposite sides of Mars, with Spirit on the plains of the 160 km diameter Gusev Crater and Opportunity sitting cozily inside the 20 m diameter, so-called "Eagle Crater" in Meridiani Planum. As of this writing, both rovers have identified the presence of the mineral hematite, which is often associated with an aqueous origin. Opportunity has coupled that observation with the detection of another diagnostic mineral, jarosite, which is only known to form in water, and with studies of the concretions known as "blueberries", to draw the virtually inescapable conclusion that these rocks were formed in the presence of liquid water, possibly subsurface. In addition, rocks containing ripples and cross-bedding are considered by most of the science community to have been deposited in flowing water on the surface of Meridiani sometime in the distant past.

The rovers have been able to make these fundamentally new observations of Mars geology through a study of large-scale morphology via panoramic imaging and remote-sensing spectroscopy via the Pancam and the Miniature Thermal Emission Spectrometer, detailed micro-scale imaging studies of rock samples via the Microscopic Imager (the first sent to another planet), and in-situ spectroscopic assessments of mineralogical composition via the Moessbauer and Alpha Particle X-ray Spectrometers. The last part of the scientific payload, the Rock Abrasion Tool, aided in determining the mineralogical composition by removing the weathering rind and dust that might otherwise have obscured the composition of a target rock. The rovers also provided a detailed study of surface materials and the atmospheric characteristics for the purpose of calibrating and validating orbital spectroscopic remote sensing.

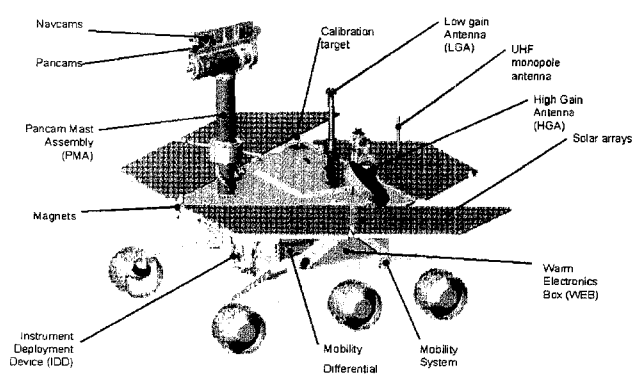

Figure 1: MER Deployed Surface Configuration

With a design lifetime of 90 sols after landing, the Spirit and Opportunity prime missions ended on 6 April and 27 April 2004. In extended mission, Spirit and Opporutnity have now more than doubled their expected lifetimes. Barring any serious anomaly, the rovers are expected to survive the upcoming winter and, if funded beyond September 2004, may continue science investigations well into 2005.

The MER rover design includes both X-band and UHF telecom subsystems. The X-band hardware supports two-way communications with the NASA / JPL's Deep Space Network during the mission's cruise, EDL, and surface phases with up/down link frequencies at 7.1and 8.4 GHz, respectively [Estabrook, et al., 2004; Hilland, et al., 2004]. The cruise stage included a Cruise Medium Gain Antenna (CMGA) and Cruise Low Gain Antenna (CLGA) for supporting links during the interplanetary cruise phase. During EDL, critical event communications occurred via the Backshell LGA (BLGA) and, after backshell separation, the Rover LGA (RLGA). Initial transmissions from the surface were supported by the RLGA and by a Petal LGA (PLGA) located on the lander petal opposite the RLGA. Finally, surface operations utilize the RLGA and a gimbaled High Gain Antenna (HGA).

The UHF subsystem, supporting communication links to the Mars relay orbiters, was used during EDL and on the surface. It consists of a UHF transceiver and a diplexer, manufactured by CMC Electronics, Cincinnati, a coaxial switch, and two monopole antennas - one located on the descent stage (DUHF) and one on the rover (RUHF). The selection of monopole antennas for the DUHF and RUHF was driven by the need for a simple design and for gain at large off-boresight angles. The DUHF is a deployable antenna located in one of the lander's petals. Figure 1 illustrates the rover surface configuration, highlighting the placement of the X-band and UHF antennas relative to science instruments on the rover deck.

3 Mars Relay Infrastructure

Three Mars orbiters offered UHF relay telecommunications services to the MER spacecraft: NASA's Mars Global Surveyor and Odyssey orbiters, and ESA's Mars Express orbiter. All three of these orbiters are primarily remote sensing science spacecraft, but each was also outfitted with a UHF proximity link payload to offer feed-forward relay capabilities to subsequent Mars missions. The multiplicity of relay assets provided important robustness in the overall MER data return strategy. We summarize here the characteristics of these three relay orbiters, illustrated in Figure 2.

3.1 Mars Global Surveyor

The Mars Global Surveyor (MGS) spacecraft was launched on November 8, 1996. The MGS spacecraft was placed into Mars orbit on September 11, 1997 and by March 9, 1999 had slowly circularized through aerobraking to a sun-synchronous, near-polar orbit with an index altitude of 378 km. The primary science payload includes the Mars Orbiter Camera (MOC), Mars Orbiter Laser Altimeter (MOLA), Thermal Emission Spectrometer (TES), Ultra-Stable Oscillator (RS; for Radio Science experiments), and Magnetometer/Electron Reflectometer package (MAG/ER). The mission is now in its third extension phase and, with the exception of the ranging function of the laser altimeter, continues full science collection.

The MGS has a single string UHF subsystem, referred to as Mars Relay (MR), consisting of a transceiver, diplexer and quadrifilar helix antenna. Transfer of data is possible only on the return link (surface element to orbiter). On MGS, the relay data flows through the MOC system, which was designed,

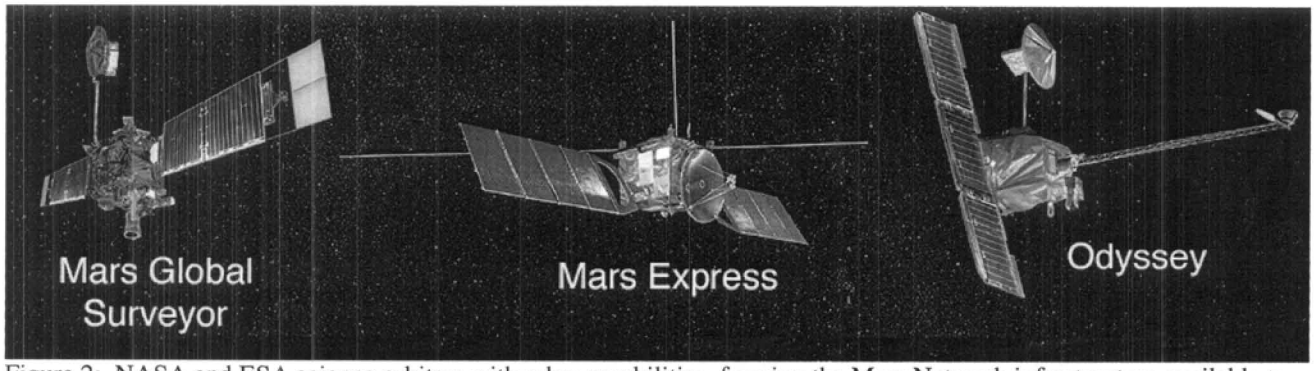

Figure 2: NASA and ESA science orbiters with relay capabilities, forming the Mars Network infrastructure available to support Spirit and Opportunity.

	Mars Global Surveyor	Mars Odyssey	Mars Express
Agency	NASA	NASA	ESA
Launch	Nov. 8, 1996	April 7, 2001	June 2, 2003
Mars Orbit Insertion	Sep. 11, 1997	Oct. 24, 2001	Dec. 24, 2003
- **Orbit Characteristics**	~400 km circular sun-synch ~2 PM asc node 93 deg inclination	~400 km circular sun-synch ~5 AM asc node 93 deg inclination	~300x10,000 km elliptical non-sun-synch 86 deg inclination
UHF Radio	Mars Relay (CNES)	CE-505	Melacom
Link Protocol	Mars Balloon Relay (MBR)	CCSDS Proximity-1	CCSDS Proximity-1
Forward Link			
- Frequency	437.1 MHz	437.1 MHz	437.1
- Data Rates	n/a (MBR tones only)	8 kbps	2, 8 kbps
- Coding	n/a	uncoded	uncoded
Return Link			
- Frequency	401.528711 MHz	401.585625 MHz	401.585625 MHz
- Data Rates	8, 128 kbps	8, 32, 128, 256 kbps	2,4,8,16,32,64,128 kbps
- Coding	(7,1/2) Convolutional	(7,1/2) Convolutional	(7,1/2) Convolutional

Table 1: Summary of relay orbiter characteristics

built and operated by Malin Space Science Systems. The MOC team sends payload commands specifying when to collect UHF data from the Mars Relay (MR) antenna. The MOC instrument buffer is a shared resource between camera images and rover data. Data received/generated by the MR are stored within the MOC buffer and returned to Earth as MOC data. On Earth, the MOC Ground Data System is responsible for extracting the data acquired by the MR from the MOC data stream, processing the MR housekeeping data. MOC's buffer consists of 40 memory segments of 256 Kbytes each (with 16 Kbytes of overhead).

3.2 Mars Odyssey

The Mars Odyssey Orbiter was launched in the 2001 opportunity with scientific goals to globally map the planet, determine the surface mineralogy and morphology, determine the elemental composition of the surface and shallow subsurface, and study the Mars radiation environment from orbit. The spacecraft carries three instrument suites to achieve these goals. The Thermal Emission Imaging System (THEMIS) is a visible and infrared imager. The Gamma Ray Spectrometer (GRS) experiment suite maps the elemental composition of the planet surface, and the Martian Radiation Environment Experiment (MARIE) characterizes the radiation environment in Mars orbit. Like MGS, the Odyssey flight system was developed under a Jet Propulsion Laboratory contract with Lockheed Martin in Denver, Colorado.

Odyssey launched from Cape Canaveral on April 07, 2001. The relatively short six-month journey to Mars concluded with a successful orbit insertion burn on October 24, 2001. The spacecraft then spent the next three months aerobraking through the Martian atmosphere to reduce the orbit from the elliptical 18.6-hour capture orbit, down to the desired 2-hour circular, polar mapping orbit. Following several weeks for orbit trim maneuvers and spacecraft reconfiguration the science mapping mission commenced on February 19, 2002. The spacecraft performance has been excellent, and the project is well on the way to achieving the primary scientific goals. The spacecraft is expected to survive well into the next decade, and it is anticipated that the mission will be extended to continue the science campaign as well as support future landed assets.

Telecommunications between the Earth and the spacecraft are conducted via an X-Band radio system utilizing a 1.3-meter high-gain antenna. The spacecraft also carries a UHF system capable of storing and forwarding commands to landed assets at 8 kbps as well as collecting data from the rovers at up to 256 kbps. The UHF payload includes dual-string CE 505 transceivers as well as a nadir deck-mounted quadrifilar helix antenna.

3.3 Mars Express

Mars Express is a Mission of the European Space Agency (ESA), launched in June 2, 2003. It arrived at the Red Planet on December 24, 2003, and successfully entered Mars Orbit. The first task of Mars Express was to release a Lander called Beagle 2 supplied by the United Kingdom. That release took place 5 days prior to arrival. Unfortunately, the Beagle 2 was not heard from again and likely did not survive the perilous entry, descent and landing operation. Fortunately, the rest of the payload and mission has been very successful. The complement of instruments includes ASPERA (Analyser of Space Plasmas and Energetic Atoms), HRSC (High Resolution Stereo Camera), OMEGA (Observatoire pour la Minéralogie, l'Eau, les Glaces et l'Activité), SPICAM (Spectroscopic Investigation of the

Characteristics of the Atmosphere of Mars), PFS (Planetary Fourier Spectrometer), MaRS (Mars Express Radio Science), and MARSIS (Mars Advanced Radar Subsurface and Ionosphere Sounder). In addition, Mars Express carries the Melacom UHF relay communications payload, which includes a QinetiQ UHF transceiver and 8 dBic UHF patch antenna.

The orbit for Mars Express was selected to allow all instruments to map the entire planet from varying altitudes as the Mars year progressed. The 6.7-hr elliptical orbit has roughly a 10,000 km apoapsis altitude and 300 km periapsis altitude. The pericenter started near the Equator, precessed to the South Pole, and is migrating back to the North. Such an orbit results in a pattern of relay contact from Mars Express that is very different that from either MGS or ODY. Both of those NASA orbiters are in low-altitude sun-synchronous orbits with Equatorial crossings at 5 AM/PM and 2 AM/PM, respectively, resulting in a very repeatable relay geometry, which simplifies planning for the landed user, although contact times are very short. By contrast, Mars Express's elliptical orbit results in less uniform contact, with large variations in pass-to-pass slant range and achievable data rate, and with occasional coverage gaps of more than 1 sol to a given user. On the other hand, the higher-altitude portions of the Mars Express orbit offer much longer pass durations and larger footprint.

4 UHF Link Characteristics

All the elements of the network except MGS implement the CCSDS Proximity-1 protocol [CCSDS, 2002]. The rovers UHF subsystem is also backward compatible with the MGS Mars Relay protocol [Ribes, 1995].

The Proximity-1 protocol allows for the efficient transmission of data (science, spacecraft commands, engineering) over a short range space link. It is also designed to allow interoperability between spacecraft from different space agencies (as demonstrated by successful communication between ESA's Mars Express and NASA's Spirit).

The subset of the protocol implemented by Mars Odyssey, Mars Express has the following main characteristics:

- fixed frequencies (437.1 MHz for the forward link, 401.59 MHz for the return link)
- data rates up to 256 kbps in the return link, up to 8 kbps in the forward link

		Opportunity-Odyssey Link Budget				
		Nominal	Adv Tol	Fav Tol	Average	Var
Elevation angle	deg	20.0				
MER TX PARAMETERS						
Transmitter Power,	dBm	40.70	-1.20	0.20	40.20	0.16
Transmitter Circuit Loss	dB	-0.30	-0.05	0.05	-0.30	0.00
Antenna Gain	dBi	0.00			0.00	1.66
LINK PARAMETERS						
Distance	km	894.19				
Link Frequency	MHz	401.60				
Space Losses	dB	-143.55			-143.55	
ODY RX PARAMETERS						
Antenna Gain	dBi	0.00	-0.75	0.75	0.00	0.19
Axial Ratio	dB	3.00				
Polarization Losses	dB				-0.13	1.09
Receiver Circuit Loss	dB	-1.80	-0.10	0.10	-1.80	0.00
Received POWER SUMMARY						
Received Total Power	dBm				-105.57	
Modulation Suppression	dB	-1.40	-0.20	0.20	-1.40	0.01
Received Power in Data Channel	dBm				-106.97	
Data Threshold, 128 kbps coded	dBm	-112.60	-2.55	2.55	-112.60	0.72
Margin	**dB**				**5.6**	
Sigma	**dB**				**1.9**	
Margin-2sigma	**dB**				**1.7**	

Table 2: MER-Odyssey Return Link Budget

- uncoded forward link; convolutional encoded (rate 1/2, constraint length 7) return link
- Go-back N link layer protocol to ensure orderly and error-free transfer of the data.

The Mars Relay (MR) subsystem on MGS was provided by the Centre Nationale d'Etudes Spaciales (CNES) in France. The same subsystem was also flown of the unsuccessful Mars Observer and Mars'96 orbiters and it was designed to support small landers, penetrators and balloons. More than a decade after being built, the MR found its first use by relaying data during Spirit EDL on June 4, 2004. Some of the MR protocol characteristic are as follow:

- fixed frequencies (437.1 MHz for the forward link, 401.53 MHz for the return link)
- data rates up to 128 kbps in the return link; the forward link does not transport data, but its used to poll the landers for data during a pass
- convolutional (7,1/2) encoded return link.

Table 2 shows an illustrative link budget for the MER to Odyssey return link. This simplified link budget is for an orbiter elevation of 20° and assumes 0 dBiC gain for both Odyssey and MER UHF antenna. In

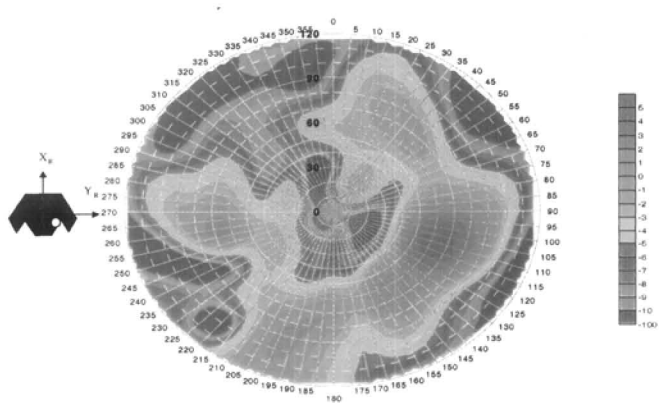

Figure 3. Rover UHF Antenna Pattern at 401.6 MHz

reality the antenna gain depends on multiple factors:

- the antenna patterns are very asymmetric in azimuth; this is due to the interaction at UHF frequency between the antenna and the structures present on the spacecraft deck; as an example Figure 3 shows the measured MER pattern measured on a mockup of the rover
- the rover can be tilted as much as 30° during a pass
- MGS and Odyssey orbiters fly canted respect to the Nadir direction (respectively by 22° and 17°).

These factors make predictions of the link somewhat difficult and make the data volume returned very dependent on the geometry of the pass (elevation and azimuth of the orbiter, tilt and yaw angle of the rover on the surface of Mars).

5 Critical Event Communications During Entry, Descent, and Landing

MER's Entry, Descent, and Landing phase was defined to begin when the spacecraft reaches the atmospheric entry interface point at 3,522.2 km from the center of Mars and ends after the rover, in its protective cocoon of deployed airbags, rolls to a stop on the Martian surface. EDL represents a challenging time of operations for MER: the sequence of events is controlled autonomously by the spacecraft's flight computer based on software uploaded to the spacecraft many weeks prior to EDL and on final parameter updates sent as late as the day of EDL. The precise timing of EDL critical events, e.g. parachute deploy, airbag inflation, rocket firing, and bridle cut, is determined by algorithms run on board which are dependent on the reception of real-time inputs from multiple spacecraft subsystems.
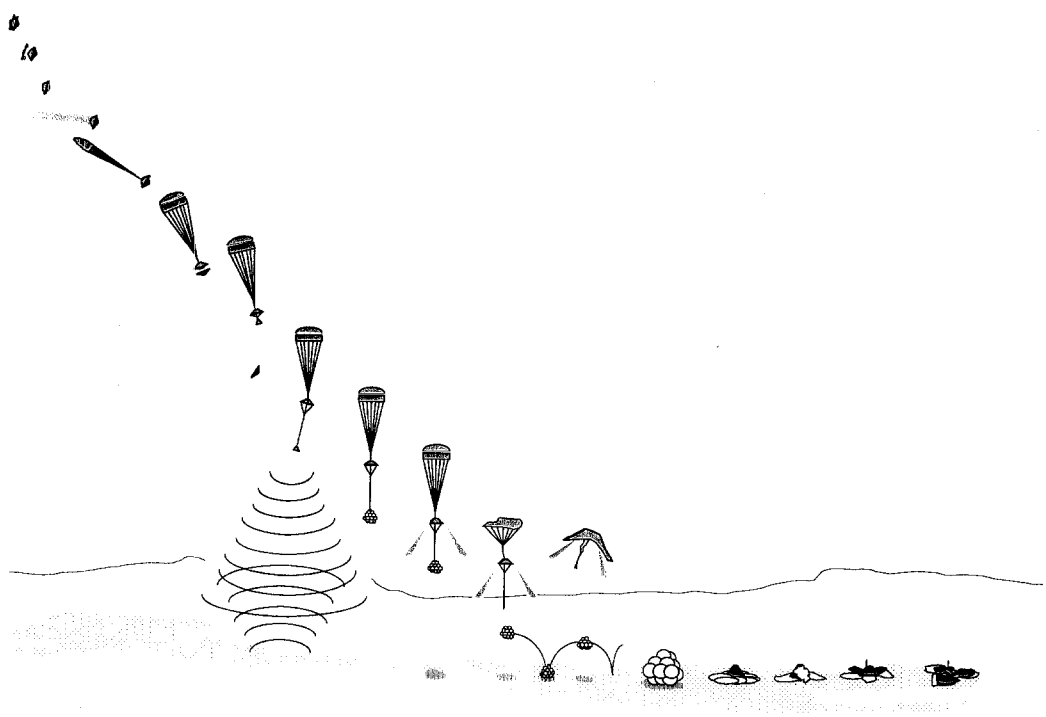
The EDL sequence of events is shown in Figure 4 and can be summarized as follows. Prior to the start of the entry turn, the spacecraft is in two-way X-band-communication with the DSN via the CMGA. At Entry – 105 minutes, the spacecraft switches to the CLGA in preparation for the turn to entry which begins 20 minutes later. The cruise stage is ejected 15 minutes prior to Entry at which point the spacecraft begins to transmit carrier and tone