Clocks and Timing in the NASA Deep Space Network

J. Lauf, M. Calhoun, W. Diener, J. Gonzalez, A. Kirk, P. Kuhnle, B. Tucker, C. Kirby, R. Tjoelker
Jet Propulsion Laboratory
California Institute of Technology
Pasadena, California, CA 91109-8099, U.S.A.

Abstract—**A new timing system has been developed for the NASA Deep Space Network (DSN) and is currently in the final stages of integration, testing and implementation in all three DSN sites. The DSN is a distributed antenna network for deep space communication, whose facilities are continuously engaged in spacecraft tracking, Very Long Baseline Interferometry (VLBI) or Radio Astronomy activities. Its primary components consist of three Deep Space Communication Centers (DSCC) separated nearly equidistant around the Earth in California, USA; Spain; and Australia. Within each DSCC, synchronized, low jitter timing signals must be distributed to many users over distances of up to 30 kilometers. The design criteria for the timing system required state of the art stability and jitter performance, but also extremely high operability and reliability. This paper describes some of the key features and recent system performance data as measured both in the laboratory and the operational DSN.**

I. INTRODUCTION

The DSN requires both state of the art frequency and timing performance as well as very high reliability. Each DSCC operates an independent Frequency and Timing System (FTS) to generate and distribute reference frequencies, time codes and pulse rates to a large number of users within the complex and locally distributed over distances of up to 30km. The timing system to be replaced was developed in the late 1970s. While historically very reliable, it has finite capacity and is no longer sustainable. Consequently, in 2002 JPL researched replacement alternatives and developed a system design for a replacement timing system appropriate for DSN operation and documented this in a detailed requirements document [1]. Several major features of the new system design were previously presented [2].

II. THE DSN FREQUENCY AND TIMING SYSTEM

As the earth rotates, inter-planetary spacecraft within the ecliptic plane appear to move across the earth's sky from east to west with a trajectory similar to that of planets within the solar system. Therefore, a single complex can maintain communication with a spacecraft in the ecliptic plane for no more than about 12 hours. Depending on mission requirements and given the horizon masking of hills adjacent to the complex, duration of a continuous track typically does not exceed 8 hours. For most activities the most stringent frequency and timing performance requirements for the DSN are therefore for averaging times of less than a day and the atomic frequency standards at each DSCC are optimized for maximum stability for this period and for low phase noise. This is in contrast to the primary needs of most national time-keeping facilities that focus on longer averaging times and the generation and maintenance of a timescale.

At each DSN complex, the central source of a single, coherent, stable frequency and timing reference is a free-running atomic standard with various back-up standards available. There is no ensemble-averaging nor short-term steering of the atomic standards. The rate of time at each complex is therefore determined by the local atomic standard whose frequency is allowed to vary in relation to UTC, sometimes for periods of up to 6 months without adjustment. Typically, the frequency offset accuracy is kept $<< \pm$ 3E-13 of UTC and the accumulated time offset from UTC does not exceed $\pm$ 3 microseconds. The frequency and time offset of the frequency standard and master clock to UTC is monitored to much higher precision via common view GPS and made available for use by the spacecraft navigation team. A significant focus is also placed on the local distribution of frequency and timing references and the ability to preserve and verify performance [3, 4].

Fig. 1 shows the progressive increase in DSN navigation accuracy during recent decades [5]. It has now reached the point that jitter in the legacy timing system may be a limiting factor on achievable accuracy. In 2002, the DSN delivered

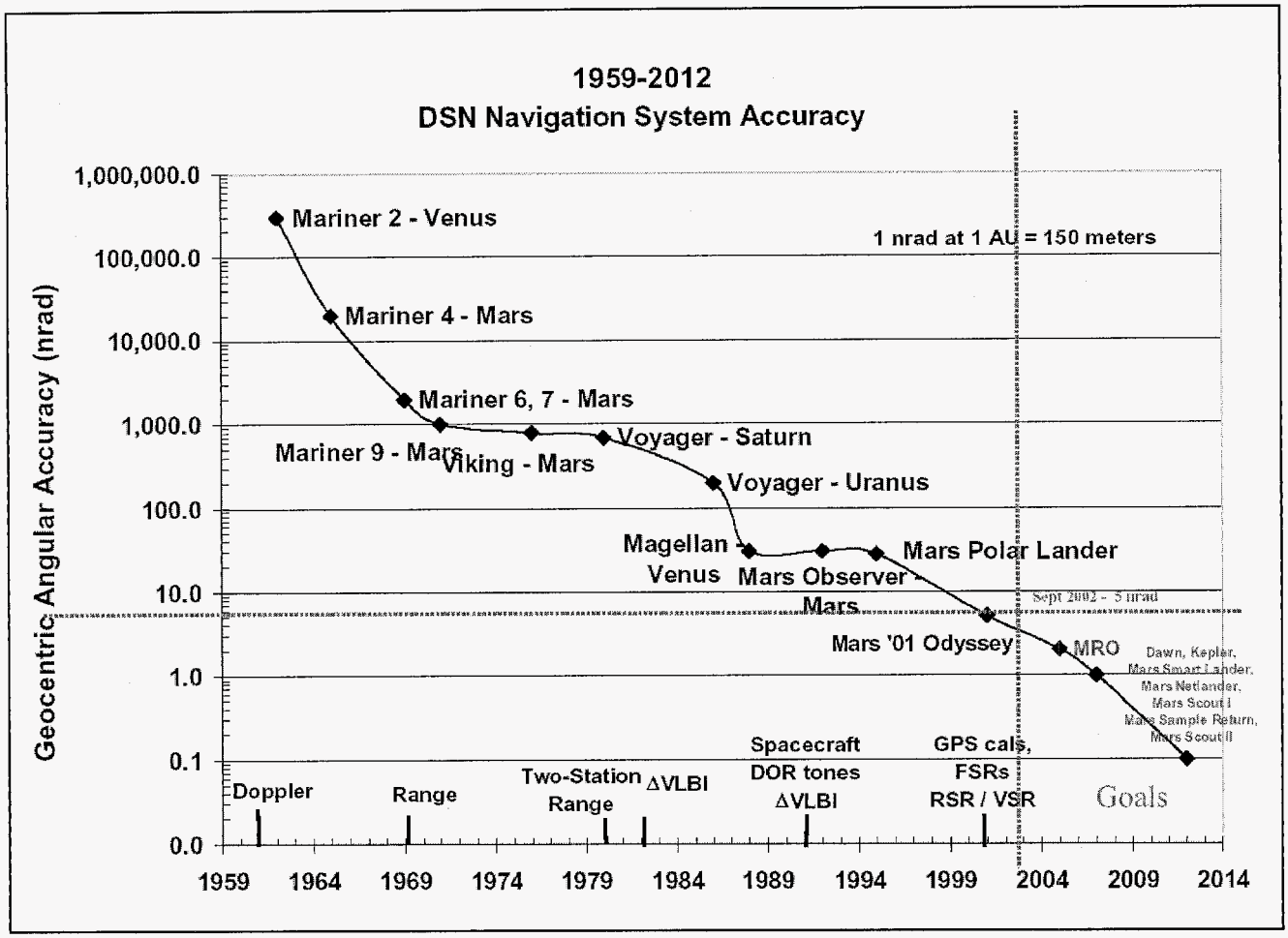

Figure 1. DSN Navigation System Accuracy [5].

navigation accuracies of 5nrad over distances of 340 million kilometers for the Mars Odyssey mission. An assessment of available technologies during the design stages for the replacement timing system indicated that an order of magnitude improvement in timing performance (jitter and set-ability) over the existing system could be reasonably obtained without compromising system reliability and would meet the DSN timing requirements for the foreseeable future.

The DSN timing system has an availability requirement of 99.99%. During the design stages, careful consideration was given to operability and reliability. Emphasis was placed on producing a very high-performance, time generation and distribution design but with minimum complexity. This philosophy informed several design decisions.

III. SYSTEM DESCRIPTION

The system has been previously described [2], so here we only summarize some of the key design goals and characteristics:

- Expandable, multi-user, time generation and distribution system based on optical fiber
- 10-fold improvement in set-ability (100ns to 10 ns) over the existing system
- 10-fold reduction in jitter (2ns to 200ps) compared with the existing system
- Design for a predicted life-time of 20 – 30 years

The final design concept incorporated 3 major assembly types, with fiber-optic interconnections as shown in Fig. 2:

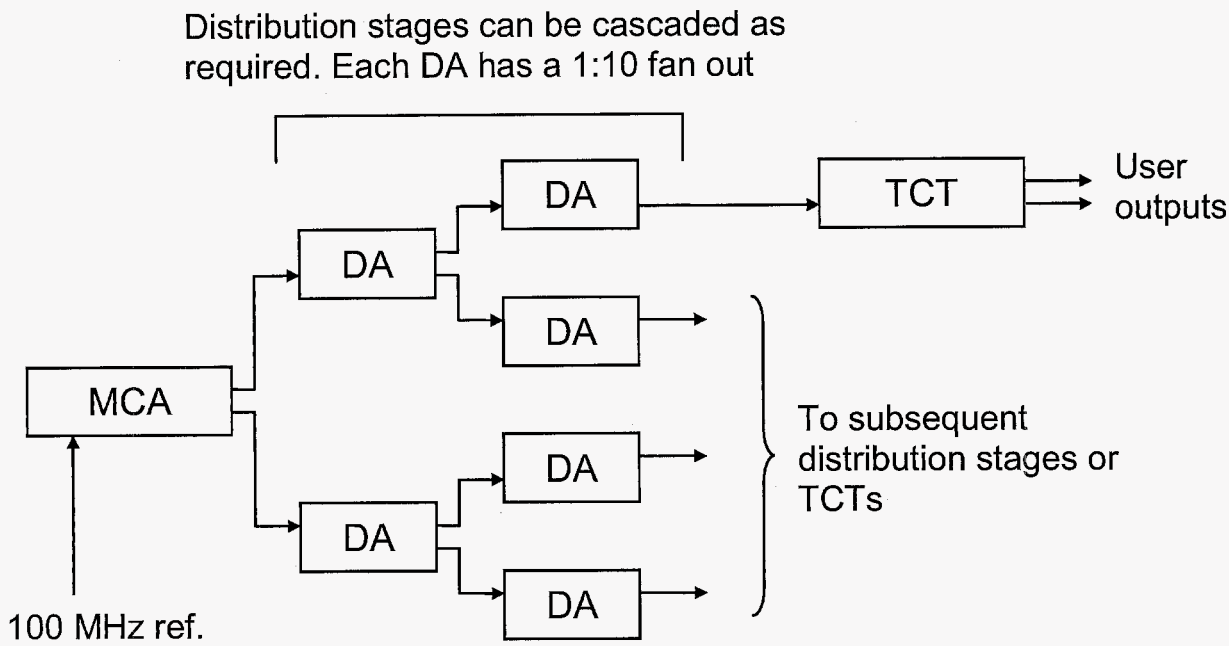

Figure 2. Interconnection of major assemblies in new timing system.

- Master Clock Assembly (MCA) – incorporates setup interface and generates station time
- Distribution Assembly (DA) – produces 1:10 fan out of the system time code
- Time Code Translator (TCT) – located in the user rack, produces time codes and pulse rates as required by specific users

IV. Key Design Features

Many details of the replacement system design have been previously described [2]. Those features that specifically illustrate elements of the design philosophy are:

A. Dual Flywheel Capability

Flywheel capability is incorporated into both the MCA and all user TCTs. This is achieved using of a phase-locked 100 MHz TCXO. Although the timing performance is degraded during conditions of flywheel holdover, it allows basic DSN operation to continue and the ability to complete spacecraft tracks for periods of less than 12 hours. This design significantly reduces vulnerability to the several potential single-point failures between the atomic frequency standard and the user. It also facilitates the ability to switch between atomic frequency standards without interruption of the timing signal to users.

B. Dual Redundant Power Supplies

All MCA and DA chassis incorporate dual-redundant, hot-swappable power supplies that can be sourced from independent power sources, significantly reducing vulnerability to failures in either the main or uninterruptible (UPS) power sources.

C. High Reliability

The calculated Mean Time Between Critical Failure of the MCA, DA and TCT assemblies is greater than 100,000 hours, due in part to the functional simplicity. All modules in the MCA and DA chassis can be hot swapped if necessary, typically with little or no impact on downstream users. All functions within the timing chain are FPGA-based.

D. No Remote Control

System time can be set or slewed with a simple front-panel control. By design there is no computer interface or remote control capability. This significantly reduces both cost and complexity and eliminates all IT security, and software-related vulnerability issues. High-level, go/no-go alarms that isolate a problem to the Lowest Replaceable Element (LRE) at the modular level are generated within each chassis.

E. Performance Monitor

A loop-back signal from each TCT returns a 1 PPS signal back to the central distribution point. This allows for central jitter and offset monitoring of all users. A simple missing

pulse detector communicates anomalous TCT behavior to maintenance personnel.

Complete in-house development of the replacement timing system was initially considered, particularly in light of the difficulty the DSN has encountered with previous turn-key systems. The development strategy selected was to obtain the module non-recurring engineering (NRE) and hardware production from a commercial timing vendor [6] but that JPL would perform hardware evaluation, integration, system testing, fiber optic infrastructure and installation, training, and verification at the DSCCs.

Following thorough testing of the engineering model and production hardware by both the vendor and JPL, system integration and installation of the new system is now complete at 3 DSN test facilities and is well under way at the major DSN DSCCs.

V. SYSTEM PERFORMANCE DATA

The most demanding DSN Frequency and Timing Subsystem (FTS) requirements in the DSN are in the area of frequency and phase stability. The DSN hydrogen masers typically deliver stability on the order of 1E-15 at 1000s and SSB phase noise ~ -120dBC, at 100 MHz, 10Hz from the carrier. For specified missions (e.g. Cassini-Hygens Radio Science) a Cryogenic Sapphire Oscillator (CSO) is used to deliver SSB phase noise of -130dBC at 100 MHz, 1 - 100Hz from the carrier [7].

Until recently, performance of the existing timing system has exceeded all sub-system requirements although in the area of navigation accuracy, more stringent demands are being placed on the timing system. The design goals for the new system included 10 times improvement in set-ability and jitter over the legacy system. By using an embedded 100 MHz carrier for the distribution of the timing signals, set-ability of 10ns at the user is obtained.

A. Jitter

The performance of all control room and most remote TCTs at the DSCCs is monitored in near-realtime by the JPL-built Time Analyzer [4]. Fig. 3 shows the relative jitter of the legacy and upgrade system TCTs as measured in the field by the Time Analyzer, at the time of the transition to the new timing system at the California complex. The performance of the 1PPS pulse stream from each TCT is sequentially monitored for 100 seconds by the Time Analyzer. In this case, the maximum recorded standard deviation is shown for each TCT being monitored over a period of approximately 6 days. The data shows more than an order of magnitude improvement between the old and new system. The typical measured rms jitter in the new system is < 30ps.

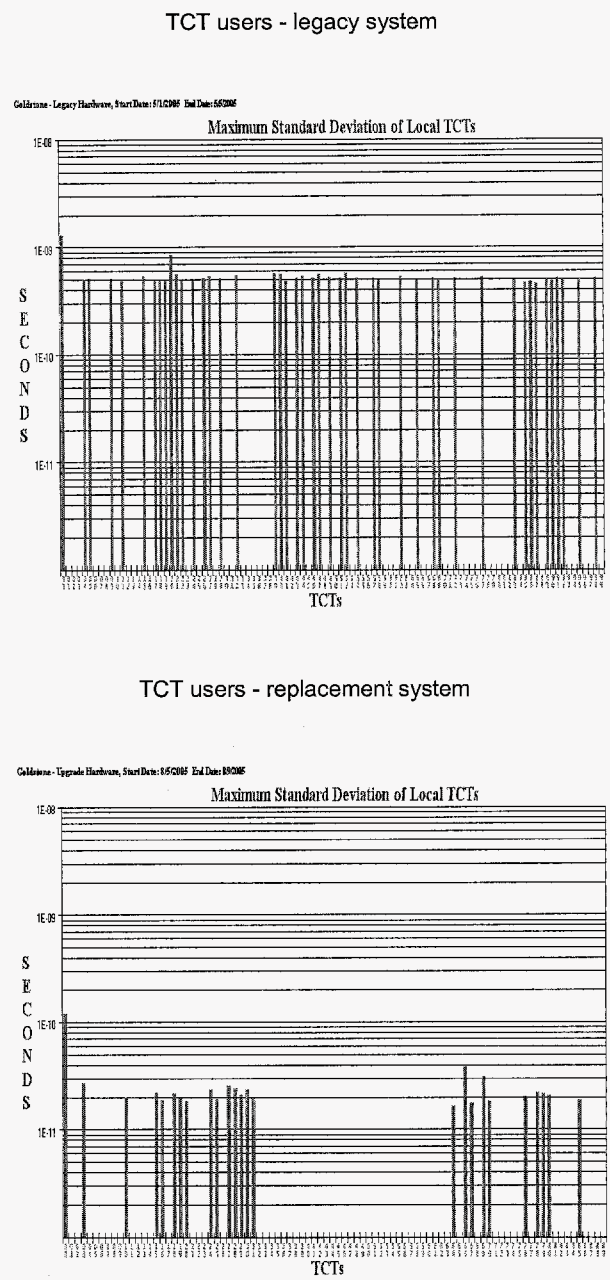

Figure 3. Comparison of RMS jitter delivered to TCT users.

Currently, the worst case distribution configuration in the DSN has 4 distribution stages between the MCA and TCT, due to a combination of remote antenna locations and lack of available optical fibers. At the time of writing, performance data from the field is not yet available for the new remote TCTs that receive their time code through multiple distribution stages. However, laboratory data indicates that

additional distribution stages cause little degradation in timing performance at the user as the signal is reconstituted at each DA. Laboratory data from TCTs fed through 4 distribution stages yields approximately 40ps jitter rms compared to the ~ 30ps observed through a single distribution stage.

B. *Repeatability (skew between TCTs)*

Station "on-time" is defined by the rising edge of a 1PPS pulse generated at the output of the MCA front panel. It is required that the corresponding edge of the 1PPS pulses at the users are synchronous with the station MCA. It is therefore necessary to remove any distribution delay by "advancing" the time of each individual TCT to compensate for the specific distribution time delay.

Removal of the distribution delay is accomplished with compensation switches in each TCT. At the time of installation, the distribution delay to each respective TCT is calibrated against the station "on-time" using a variety of methods depending on the TCT location. Where possible, the TCT delay compensation setting is verified using calibrated cables and a precision time interval counter. For remotely located TCTs, the calibration is verified using a traveling clock. In the event of a TCT failure and the need to rapidly recover system operations, it may not be possible for field technicians to carefully calibrate the delay compensation of the replacement unit. It is therefore necessary that the delay compensation settings for all TCTs are repeatable.

Table 1 illustrates the repeatability of the 1PPS offset for 40 different TCTs with the same delay compensation setting. The 1PPS offset variation is less than ± 1ns for the same setting.

TABLE I. REPEATABILITY (SKEW) OF 1PPS OFFSET OF 40 TIME CODE TRANSLATORS (TCT)

Statistic	Value
TCT count	40
Mean	1.60ns
Min	1.05ns
Max	2.24ns
Standard Deviation	0.33ns

C. *Thermal Sensitivity*

Most hardware at the DSN complexes is located in thermally controlled environments with less than ± 1 degree diurnal variation though some antenna-mounted hardware may experience variations of up to several degrees. Most fiber optic cables are buried several feet underground and see little diurnal temperature variation. Maximum annual temperature variation for buried fiber at the Goldstone complex in California, which has the longest fiber optic cable runs up to 30km, is approximately 10 degrees.

TABLE II. TEMPERATURE SENSITIVITY OF THE NEW TIMING SYSTEM WITH 2 DA STAGES AND 2KM DISTRIBUTION FIBER

Hardware	Sensitivity
MCA	80 ps/°C
DA	27 ps/°C 1.60ns
TCT	20 ps/°C 1.05ns
Multimode Fiber	44 ps/°C/km

Table 2 shows the thermal sensitivity of the individual hardware assemblies as measured in the JPL Frequency Standards Test Laboratory. Two stages of distribution hardware is a typical DSN operational configuration as most TCT users are located within 2km of the Master Clock. In practice, most distribution fibers are much shorter, and the entire system will not experience a uniform temperature variation but the worst case diurnal variation is < 215 ps/degree C.

D. *Frequency Stability*

Historically the DSN distribution of frequency and time reference signals has been provided by two separate sub-systems. This is driven by performance considerations, though not all frequency users require a state of the art capability. While this system was designed foremost as a timing system, the holdover feature in each TCT which uses a low-cost, tightly phase-locked 100 MHz TCXO flywheel, makes it possible to regenerate a very good quality frequency reference signal from the distributed System Time Code. This feature, with an appropriately designed TCT plug-in module, provides the added benefit of distributing frequency reference signals to TCT users that can tolerate moderate performance.

Because the oscillator in the TCT is phase locked to the station reference frequency, the long term frequency stability tracks that of the on-line atomic standard. However, by appropriately setting the loop band-width (LBW) of the phase locked loop (PLL) in the TCT, the phase noise of the derived user frequency output can be optimized. The three curves of Fig. 4 show the SSB phase noise of an SAO hydrogen maser (with oscilloquatrz VCXO), the free-running TCXO built into the TCT and the output frequency from a 100 MHz card developed to plug into the TCT. (The

100 MHz card output derives from the TCXO locked to the System Time Code which traces its reference via the Master Clock Assembly to the reference hydrogen maser.) With the

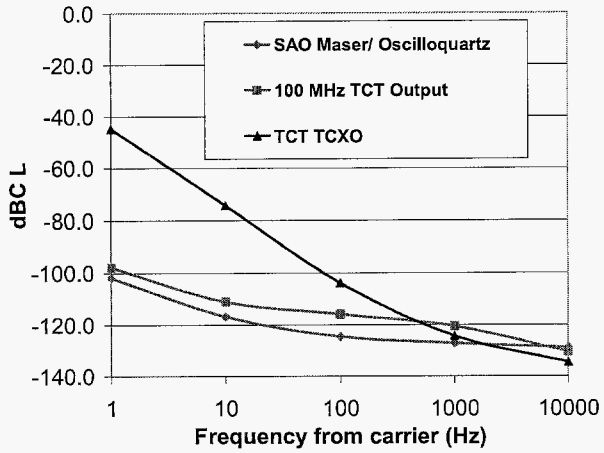

Figure 4. System phase noise at 100 MHz

PLL LBW of approximately 250 Hz, the user output will experience the maser phase noise out to 250Hz and the TCXO phase noise beyond. The plot shows an approximate worst case degradation of 10 dB from the theoretical value, a level satisfactory for many moderate performance DSN users. This feature allows the timing system infrastructure to be used to provide both time and frequency information to users by simply providing an appropriate TCT plug-in board that can be installed in locations where TCTs already exist.

VI. CONCLUSION

A new replacement timing system has been developed for the NASA Deep Space Network. The replacement system is designed with an estimate lifetime need of 20 – 30 years. To date, all reliability and initial aging data indicate that the new system will meet or exceed this goal. However, the DSN infrastructure is constantly evolving. It is intended that the improved system performance, modular design, and expandable architecture will facilitate easy adaptation to changing future DSN requirements and configuration.

At the time of writing, there is in excess of 12 months run-time on the new systems at the DSN test facilities. The Goldstone DSCC began operating on the new clock in May 2005 and the Canberra DSCC began operation in September 2005. To date, no operational anomalies have been detected and the new system is meeting or exceeding performance and functional requirements. Work is ongoing to complete installation of additional fiber optic infrastructure and to transition all users to the new fiber optic based distribution system and new TCTs. Transition of the entire DSN is expected to be completed by the end of 2005.

VII. ACKNOWLEDGEMENT

This work was carried out at the Jet Propulsion Laboratory, California Institute of Technology under contract with the National Aeronautics and Space Administration.

REFERENCES

[1] "Frequency and Timing System Master Clock and Timing Group Replacement," JPL Technical Requirements Document, DSMS No. TRD-517892, JPL D-22188, March 1, 2002 and April 8, 2003.

[2] J. Lauf, M. Calhoun, P.F. Kuhnle, R.L. Sydnor, R.L. Tjeolker, "Master Clock and Time Distribution System for the NASA Deep Space Network," in Proceedings of the 35th Annual Precise Time and Time Interval (PTTI) Systems and Applications Meeting, San Diego, California, U.S.A., December 2003.

[3] C. Greenhall, A. Kirk, G. Stevens, "A Multi-channel Dual-Mixer Stability Analyzer: Progress Report", in Proceedings of the 33rd Annual Precise Time and Time Interval (PTTI) Systems and Applications Meeting, Long Beach, California, U.S.A., December 2001.

[4] J. Gonzales, M. Calhoun, S. Cole, R.L. Tjoelker, "Multi-Purpose Time Analyzer and Monitor for Deep Space Network Time Synchronization" in Proceedings of the 32nd Annual Precise Time and Time Interval (PTTI) Systems and Applications Meeting, Reston, Virginia, U.S.A., December 2000.

[5] J. Border, "DSN Navigation System Accuracy," Descanso Performance Metrics, http://Descanso.jpl.nasa.gov/PerformMetrics/DSN_NavSysAccuracy.cfm, October, 2002

[6] Timing Solutions Corporation, Boulder, CO, U.S.A.

[7] R. T. Wang et. al., "A High Performance Frequency Standard and Distribution System for Cassini Ka-Band Experiment" in these Proceedings. See also "Stability and Phase Noise Tests of Two Cryocooled Sapphire Oscillators," Proceedings, 13th EFTF and 1999 IEEE Frequency Control Symposium, Besancon, France, pp. 548-551, April 1999.

Clocks and Timing in the NASA Deep Space Network

J. Lauf, M. Calhoun, W. Diener, J. Gonzalez, A. Kirk, P. Kuhnle, B. Tucker, C. Kirby, R. Tjoelker
Jet Propulsion Laboratory
California Institute of Technology
Pasadena, California, CA 91109-8099, U.S.A.

Abstract—**A new timing system has been developed for the NASA Deep Space Network (DSN) and is currently in the final stages of integration, testing and implementation in all three DSN sites. The DSN is a distributed antenna network for deep space communication, whose facilities are continuously engaged in spacecraft tracking, Very Long Baseline Interferometry (VLBI) or Radio Astronomy activities. Its primary components consist of three Deep Space Communication Centers (DSCC) separated nearly equidistant around the Earth in California, USA; Spain; and Australia. Within each DSCC, synchronized, low jitter timing signals must be distributed to many users over distances of up to 30 kilometers. The design criteria for the timing system required state of the art stability and jitter performance, but also extremely high operability and reliability. This paper describes some of the key features and recent system performance data as measured both in the laboratory and the operational DSN.**

I. Introduction

The DSN requires both state of the art frequency and timing performance as well as very high reliability. Each DSCC operates an independent Frequency and Timing System (FTS) to generate and distribute reference frequencies, time codes and pulse rates to a large number of users within the complex and locally distributed over distances of up to 30km. The timing system to be replaced was developed in the late 1970s. While historically very reliable, it has finite capacity and is no longer sustainable. Consequently, in 2002 JPL researched replacement alternatives and developed a system design for a replacement timing system appropriate for DSN operation and documented this in a detailed requirements document [1]. Several major features of the new system design were previously presented [2].

II. The DSN Frequency and Timing System

As the earth rotates, inter-planetary spacecraft within the ecliptic plane appear to move across the earth's sky from east to west with a trajectory similar to that of planets within the solar system. Therefore, a single complex can maintain communication with a spacecraft in the ecliptic plane for no more than about 12 hours. Depending on mission requirements and given the horizon masking of hills adjacent to the complex, duration of a continuous track typically does not exceed 8 hours. For most activities the most stringent frequency and timing performance requirements for the DSN are therefore for averaging times of less than a day and the atomic frequency standards at each DSCC are optimized for maximum stability for this period and for low phase noise. This is in contrast to the primary needs of most national time-keeping facilities that focus on longer averaging times and the generation and maintenance of a timescale.

At each DSN complex, the central source of a single, coherent, stable frequency and timing reference is a free-running atomic standard with various back-up standards available. There is no ensemble-averaging nor short-term steering of the atomic standards. The rate of time at each complex is therefore determined by the local atomic standard whose frequency is allowed to vary in relation to UTC, sometimes for periods of up to 6 months without adjustment. Typically, the frequency offset accuracy is kept $<< \pm$ 3E-13 of UTC and the accumulated time offset from UTC does not exceed $\pm$ 3 microseconds. The frequency and time offset of the frequency standard and master clock to UTC is monitored to much higher precision via common view GPS and made available for use by the spacecraft navigation team. A significant focus is also placed on the local distribution of frequency and timing references and the ability to preserve and verify performance [3, 4].

Fig. 1 shows the progressive increase in DSN navigation accuracy during recent decades [5]. It has now reached the point that jitter in the legacy timing system may be a limiting factor on achievable accuracy. In 2002, the DSN delivered

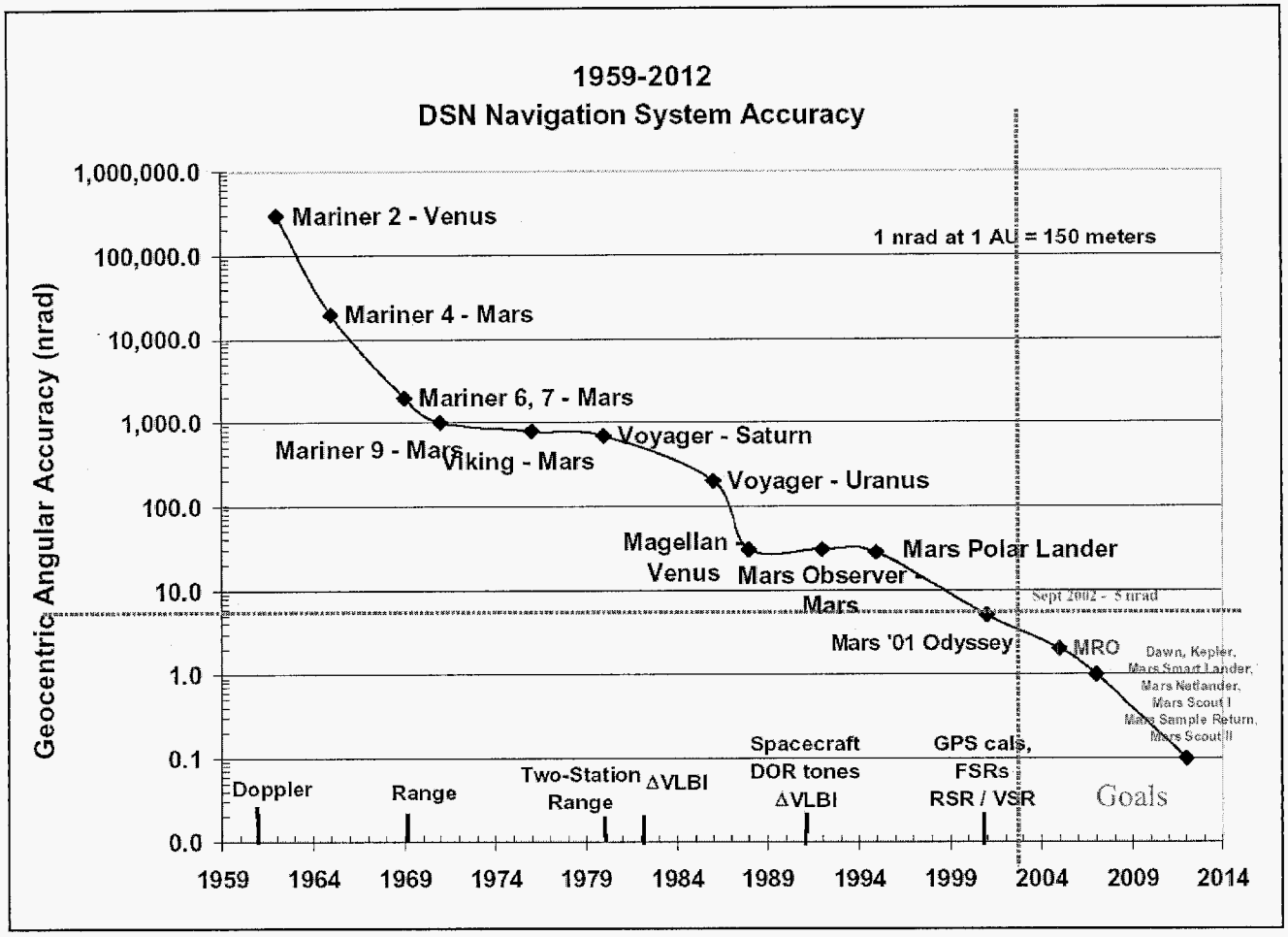

Figure 1. DSN Navigation System Accuracy [5].

navigation accuracies of 5nrad over distances of 340 million kilometers for the Mars Odyssey mission. An assessment of available technologies during the design stages for the replacement timing system indicated that an order of magnitude improvement in timing performance (jitter and set-ability) over the existing system could be reasonably obtained without compromising system reliability and would meet the DSN timing requirements for the foreseeable future.

The DSN timing system has an availability requirement of 99.99%. During the design stages, careful consideration was given to operability and reliability. Emphasis was placed on producing a very high-performance, time generation and distribution design but with minimum complexity. This philosophy informed several design decisions.

III. SYSTEM DESCRIPTION

The system has been previously described [2], so here we only summarize some of the key design goals and characteristics:

- Expandable, multi-user, time generation and distribution system based on optical fiber
- 10-fold improvement in set-ability (100ns to 10 ns) over the existing system
- 10-fold reduction in jitter (2ns to 200ps) compared with the existing system
- Design for a predicted life-time of 20 – 30 years

The final design concept incorporated 3 major assembly types, with fiber-optic interconnections as shown in Fig. 2:

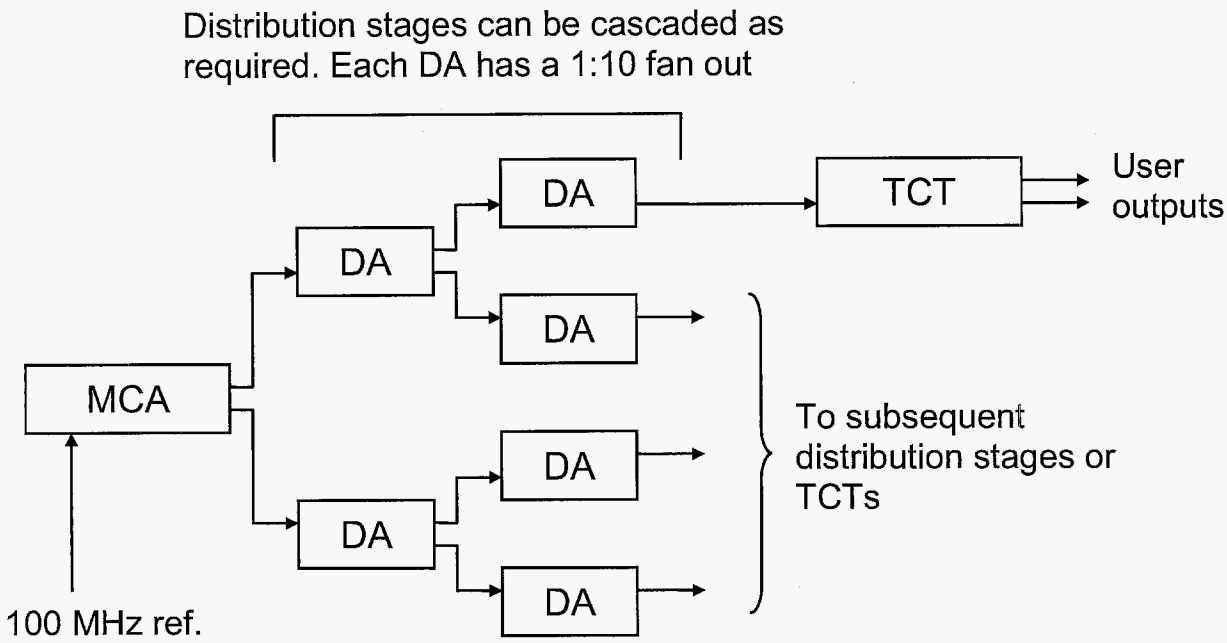

Figure 2. Interconnection of major assemblies in new timing system.

- Master Clock Assembly (MCA) – incorporates setup interface and generates station time
- Distribution Assembly (DA) – produces 1:10 fan out of the system time code
- Time Code Translator (TCT) – located in the user rack, produces time codes and pulse rates as required by specific users

IV. Key Design Features

Many details of the replacement system design have been previously described [2]. Those features that specifically illustrate elements of the design philosophy are:

A. Dual Flywheel Capability

Flywheel capability is incorporated into both the MCA and all user TCTs. This is achieved using of a phase-locked 100 MHz TCXO. Although the timing performance is degraded during conditions of flywheel holdover, it allows basic DSN operation to continue and the ability to complete spacecraft tracks for periods of less than 12 hours. This design significantly reduces vulnerability to the several potential single-point failures between the atomic frequency standard and the user. It also facilitates the ability to switch between atomic frequency standards without interruption of the timing signal to users.

B. Dual Redundant Power Supplies

All MCA and DA chassis incorporate dual-redundant, hot-swappable power supplies that can be sourced from independent power sources, significantly reducing vulnerability to failures in either the main or uninterruptible (UPS) power sources.

C. High Reliability

The calculated Mean Time Between Critical Failure of the MCA, DA and TCT assemblies is greater than 100,000 hours, due in part to the functional simplicity. All modules in the MCA and DA chassis can be hot swapped if necessary, typically with little or no impact on downstream users. All functions within the timing chain are FPGA-based.

D. No Remote Control

System time can be set or slewed with a simple front-panel control. By design there is no computer interface or remote control capability. This significantly reduces both cost and complexity and eliminates all IT security, and software-related vulnerability issues. High-level, go/no-go alarms that isolate a problem to the Lowest Replaceable Element (LRE) at the modular level are generated within each chassis.

E. Performance Monitor

A loop-back signal from each TCT returns a 1 PPS signal back to the central distribution point. This allows for central jitter and offset monitoring of all users. A simple missing

pulse detector communicates anomalous TCT behavior to maintenance personnel.

Complete in-house development of the replacement timing system was initially considered, particularly in light of the difficulty the DSN has encountered with previous turn-key systems. The development strategy selected was to obtain the module non-recurring engineering (NRE) and hardware production from a commercial timing vendor [6] but that JPL would perform hardware evaluation, integration, system testing, fiber optic infrastructure and installation, training, and verification at the DSCCs.

Following thorough testing of the engineering model and production hardware by both the vendor and JPL, system integration and installation of the new system is now complete at 3 DSN test facilities and is well under way at the major DSN DSCCs.

V. SYSTEM PERFORMANCE DATA

The most demanding DSN Frequency and Timing Subsystem (FTS) requirements in the DSN are in the area of frequency and phase stability. The DSN hydrogen masers typically deliver stability on the order of 1E-15 at 1000s and SSB phase noise ~ -120dBC, at 100 MHz, 10Hz from the carrier. For specified missions (e.g. Cassini-Hygens Radio Science) a Cryogenic Sapphire Oscillator (CSO) is used to deliver SSB phase noise of -130dBC at 100 MHz, 1 - 100Hz from the carrier [7].

Until recently, performance of the existing timing system has exceeded all sub-system requirements although in the area of navigation accuracy, more stringent demands are being placed on the timing system. The design goals for the new system included 10 times improvement in set-ability and jitter over the legacy system. By using an embedded 100 MHz carrier for the distribution of the timing signals, set-ability of 10ns at the user is obtained.

A. Jitter

The performance of all control room and most remote TCTs at the DSCCs is monitored in near-realtime by the JPL-built Time Analyzer [4]. Fig. 3 shows the relative jitter of the legacy and upgrade system TCTs as measured in the field by the Time Analyzer, at the time of the transition to the new timing system at the California complex. The performance of the 1PPS pulse stream from each TCT is sequentially monitored for 100 seconds by the Time Analyzer. In this case, the maximum recorded standard deviation is shown for each TCT being monitored over a period of approximately 6 days. The data shows more than an order of magnitude improvement between the old and new system. The typical measured rms jitter in the new system is < 30ps.

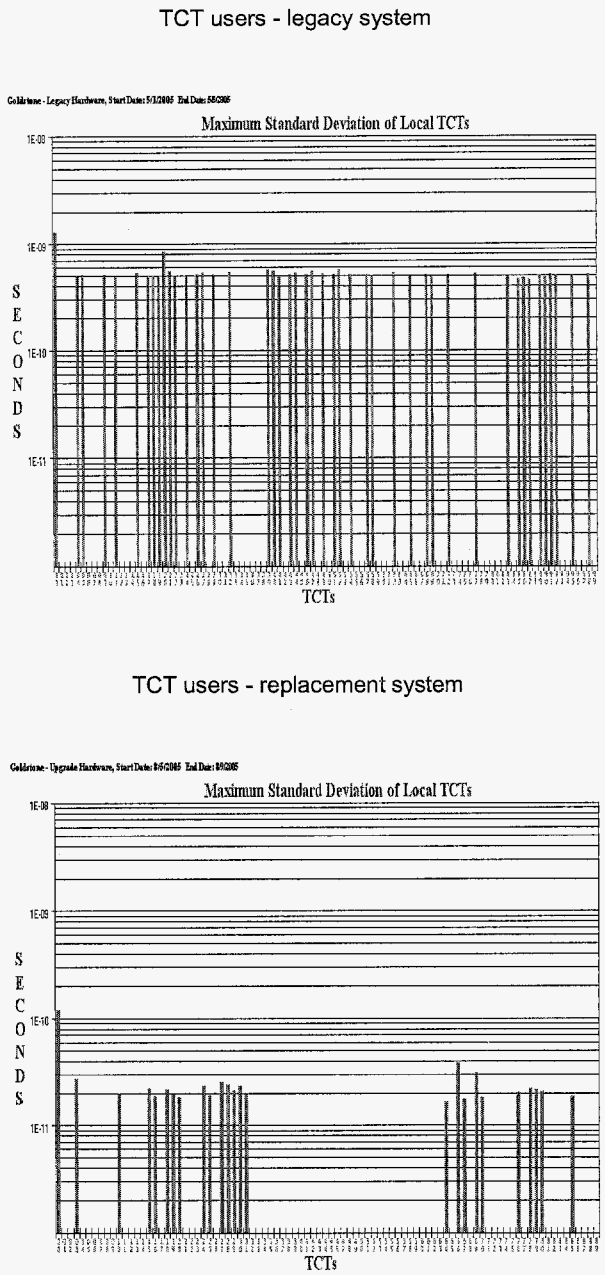

Figure 3. Comparison of RMS jitter delivered to TCT users.

Currently, the worst case distribution configuration in the DSN has 4 distribution stages between the MCA and TCT, due to a combination of remote antenna locations and lack of available optical fibers. At the time of writing, performance data from the field is not yet available for the new remote TCTs that receive their time code through multiple distribution stages. However, laboratory data indicates that

additional distribution stages cause little degradation in timing performance at the user as the signal is reconstituted at each DA. Laboratory data from TCTs fed through 4 distribution stages yields approximately 40ps jitter rms compared to the ~ 30ps observed through a single distribution stage.

B. *Repeatability (skew between TCTs)*

Station "on-time" is defined by the rising edge of a 1PPS pulse generated at the output of the MCA front panel. It is required that the corresponding edge of the 1PPS pulses at the users are synchronous with the station MCA. It is therefore necessary to remove any distribution delay by "advancing" the time of each individual TCT to compensate for the specific distribution time delay.

Removal of the distribution delay is accomplished with compensation switches in each TCT. At the time of installation, the distribution delay to each respective TCT is calibrated against the station "on-time" using a variety of methods depending on the TCT location. Where possible, the TCT delay compensation setting is verified using calibrated cables and a precision time interval counter. For remotely located TCTs, the calibration is verified using a traveling clock. In the event of a TCT failure and the need to rapidly recover system operations, it may not be possible for field technicians to carefully calibrate the delay compensation of the replacement unit. It is therefore necessary that the delay compensation settings for all TCTs are repeatable.

Table 1 illustrates the repeatability of the 1PPS offset for 40 different TCTs with the same delay compensation setting. The 1PPS offset variation is less than ± 1ns for the same setting.

TABLE I. REPEATABILITY (SKEW) OF 1PPS OFFSET OF 40 TIME CODE TRANSLATORS (TCT)

Statistic	Value
TCT count	40
Mean	1.60ns
Min	1.05ns
Max	2.24ns
Standard Deviation	0.33ns

C. *Thermal Sensitivity*

Most hardware at the DSN complexes is located in thermally controlled environments with less than ± 1 degree diurnal variation though some antenna-mounted hardware may experience variations of up to several degrees. Most fiber optic cables are buried several feet underground and see little diurnal temperature variation. Maximum annual temperature variation for buried fiber at the Goldstone complex in California, which has the longest fiber optic cable runs up to 30km, is approximately 10 degrees.

TABLE II. TEMPERATURE SENSITIVITY OF THE NEW TIMING SYSTEM WITH 2 DA STAGES AND 2KM DISTRIBUTION FIBER

Hardware	Sensitivity
MCA	80 ps/°C
DA	27 ps/°C 1.60ns
TCT	20 ps/°C 1.05ns
Multimode Fiber	44 ps/°C/km

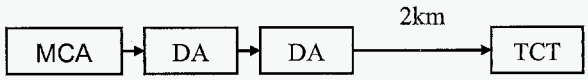

Table 2 shows the thermal sensitivity of the individual hardware assemblies as measured in the JPL Frequency Standards Test Laboratory. Two stages of distribution hardware is a typical DSN operational configuration as most TCT users are located within 2km of the Master Clock. In practice, most distribution fibers are much shorter, and the entire system will not experience a uniform temperature variation but the worst case diurnal variation is < 215 ps/degree C.

D. *Frequency Stability*

Historically the DSN distribution of frequency and time reference signals has been provided by two separate sub-systems. This is driven by performance considerations, though not all frequency users require a state of the art capability. While this system was designed foremost as a timing system, the holdover feature in each TCT which uses a low-cost, tightly phase-locked 100 MHz TCXO flywheel, makes it possible to regenerate a very good quality frequency reference signal from the distributed System Time Code. This feature, with an appropriately designed TCT plug-in module, provides the added benefit of distributing frequency reference signals to TCT users that can tolerate moderate performance.

Because the oscillator in the TCT is phase locked to the station reference frequency, the long term frequency stability tracks that of the on-line atomic standard. However, by appropriately setting the loop band-width (LBW) of the phase locked loop (PLL) in the TCT, the phase noise of the derived user frequency output can be optimized. The three curves of Fig. 4 show the SSB phase noise of an SAO hydrogen maser (with oscilloquatrz VCXO), the free-running TCXO built into the TCT and the output frequency from a 100 MHz card developed to plug into the TCT. (The

100 MHz card output derives from the TCXO locked to the System Time Code which traces its reference via the Master Clock Assembly to the reference hydrogen maser.) With the

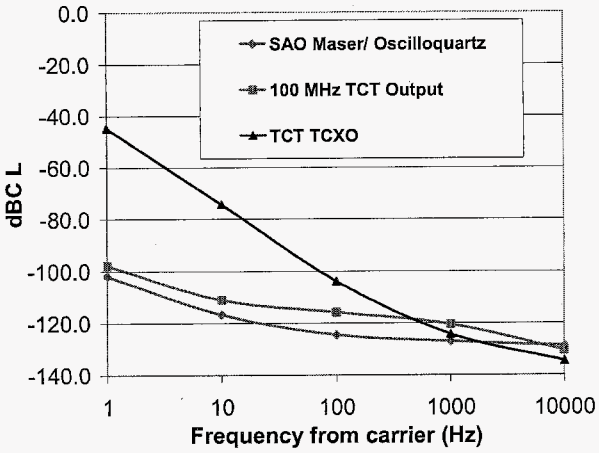

Figure 4. System phase noise at 100 MHz

PLL LBW of approximately 250 Hz, the user output will experience the maser phase noise out to 250Hz and the TCXO phase noise beyond. The plot shows an approximate worst case degradation of 10 dB from the theoretical value, a level satisfactory for many moderate performance DSN users. This feature allows the timing system infrastructure to be used to provide both time and frequency information to users by simply providing an appropriate TCT plug-in board that can be installed in locations where TCTs already exist.

VI. CONCLUSION

A new replacement timing system has been developed for the NASA Deep Space Network. The replacement system is designed with an estimate lifetime need of 20 – 30 years. To date, all reliability and initial aging data indicate that the new system will meet or exceed this goal. However, the DSN infrastructure is constantly evolving. It is intended that the improved system performance, modular design, and expandable architecture will facilitate easy adaptation to changing future DSN requirements and configuration.

At the time of writing, there is in excess of 12 months run-time on the new systems at the DSN test facilities. The Goldstone DSCC began operating on the new clock in May 2005 and the Canberra DSCC began operation in September 2005. To date, no operational anomalies have been detected and the new system is meeting or exceeding performance and functional requirements. Work is ongoing to complete installation of additional fiber optic infrastructure and to transition all users to the new fiber optic based distribution system and new TCTs. Transition of the entire DSN is expected to be completed by the end of 2005.

VII. ACKNOWLEDGEMENT

This work was carried out at the Jet Propulsion Laboratory, California Institute of Technology under contract with the National Aeronautics and Space Administration.

REFERENCES

[1] "Frequency and Timing System Master Clock and Timing Group Replacement," JPL Technical Requirements Document, DSMS No. TRD-517892, JPL D-22188, March 1, 2002 and April 8, 2003.

[2] J. Lauf, M. Calhoun, P.F. Kuhnle, R.L. Sydnor, R.L. Tjeolker, "Master Clock and Time Distribution System for the NASA Deep Space Network," in Proceedings of the 35th Annual Precise Time and Time Interval (PTTI) Systems and Applications Meeting, San Diego, California, U.S.A., December 2003.

[3] C. Greenhall, A. Kirk, G. Stevens, "A Multi-channel Dual-Mixer Stability Analyzer: Progress Report", in Proceedings of the 33rd Annual Precise Time and Time Interval (PTTI) Systems and Applications Meeting, Long Beach, California, U.S.A., December 2001.

[4] J. Gonzales, M. Calhoun, S. Cole, R.L. Tjoelker, "Multi-Purpose Time Analyzer and Monitor for Deep Space Network Time Synchronization" in Proceedings of the 32nd Annual Precise Time and Time Interval (PTTI) Systems and Applications Meeting, Reston, Virginia, U.S.A., December 2000.

[5] J. Border, "DSN Navigation System Accuracy," Descanso Performance Metrics, http://Descanso.jpl.nasa.gov/PerformMetrics/DSN_NavSysAccuracy.cfm, October, 2002

[6] Timing Solutions Corporation, Boulder, CO, U.S.A.

[7] R. T. Wang et. al., "A High Performance Frequency Standard and Distribution System for Cassini Ka-Band Experiment" in these Proceedings. See also "Stability and Phase Noise Tests of Two Cryocooled Sapphire Oscillators," Proceedings, 13th EFTF and 1999 IEEE Frequency Control Symposium, Besancon, France, pp. 548-551, April 1999.