JPL Publication 2005-2

Genesis Failure Investigation Report

JPL Failure Review Board, Avionics Sub-team

National Aeronautics and
Space Administration

Jet Propulsion Laboratory
California Institute of Technology
Pasadena, California

July 2004

This research was carried out at the Jet Propulsion Laboratory, California Institute of Technology, under a contract with the National Aeronautics and Space Administration.

Reference herein to any specific commercial product, process, or service by trade name, trademark, manufacturer, or otherwise, does not constitute or imply its endorsement by the United States Government or the Jet Propulsion Laboratory, California Institute of Technology.

CONTENTS

EXECUTIVE SUMMARY v

1. GENESIS MISSION DESCRIPTION 1
   1.1 Background 1
   1.2 Science 1
      1.2.1 Science Objectives 1
      1.2.2 Science Requirements 2
   1.3 Mission Design 3
   1.4 System Architecture 4
      1.4.1 Payload 4
      1.4.2 Sample Return Capsule and Spacecraft 6
   1.5 Mission Operations 7

2. TECHNICAL INVESTIGATION 9
   2.1 Proximate Cause: Drogue Not Deployed 9
   2.2 Fault Categories 10
      2.2.1 Fault 1: Electrical Failure in SRC 12
      2.2.2 Fault 2: Avionics Failure in SRC 14
      2.2.3 Fault 3: Harness/Connector Failure 25
      2.2.4 Fault 4: Drogue System Failure 27
   2.3 Discussion, Findings, and Recommendations 27
      2.3.1 Discussion 27
      2.3.2 Findings 29
      2.3.3 Other Considerations 34

3. CONTINGENCY PLANNING AND GROUND SAFETY INVESTIGATION 37
   3.1 Nominal Mission Plan 37
      3.1.1 Successful MAR 37
   3.2 Contingency Plan: SRC Ground Impact 38
      3.2.1 Contingency Plan Implementation 39
   3.3 Method of Investigation 41
      3.3.1 Observations 41
   3.4 Findings 43
      3.4.1 Proximate Cause 1: Inadequate Configuration Management of Requirements 43
      3.4.2 Proximate Cause 2: Inadequate Contingency Planning and Training 43
      3.4.3 Proximate Cause 3: Inadequate Contingency Execution 44
   3.5 Root Causes and Recommendations 44
      3.5.1 Root Cause 1: Inadequate Resources to Properly Prepare for the Event 45
      3.5.2 Root Cause 2: Insufficient Leadership Attention to the Details 45
      3.5.3 Root Cause 3: Inconsistent Contingency Planning and Preparation 46
      3.5.4 Root Cause 4: Poor Communication at the Scene 47

4. CLOSING RECOMMENDATIONS 49

LIST OF FIGURES

1-1 Genesis mission trajectory ... 3
1-2 Typical collector arrays ... 5
1-3 Genesis parabolic concentrator ... 5
1-4 Genesis flight system ... 6
2-1 Top-level faults shown as a fishbone diagram ... 10
2-2 SRC mechanical assembly ... 14
2-3 Spacecraft final TCMs and SRC release timeline ... 15
2-4 Genesis SRC Earth entry timeline ... 16
2-5 SRC deceleration profile and pyro event timeline ... 17
2-6 Spacecraft block diagram and interface diagram ... 18
2-7 Location of circuit cards in an avionics box ... 19
2-8 Relay module block diagram ... 19
2-9 G-switch location in relay module ... 20
2-10 G-switch views; X-ray shows mass and spring ... 20
2-11 EST block diagram ... 21
2-12 EST flow diagram ... 21
2-13 X-ray of board indicating that installation of G-switches matches board layout drawing ... 23
3-1 Nominal atmospheric trajectory ... 38

LIST OF TABLES

1-1 Prioritized measurement objectives ... 2
2-1 Fault tree close-outs ... 10
2-2 Top-level faults ... 11
2-3 EDL pyro event timeline ... 15
2-4 Genesis SRC EDL timeline (actual) ... 16
3-1 Recovery aircraft plan ... 38
3-2 Hazardous materials and personal protective equipment requirements ... 42

APPENDICES

Appendix A Comprehensive Drogue Not Deployed Faults ... 51
Appendix B Battery Analysis ... 55
Appendix C National Transportation and Safety Board Report ... 65
Appendix D FBC Implementation ... 95
Appendix E Event Timeline ... 97
Appendix F No MAR Contingency Documentation Inconsistencies ... 103
Appendix G Fault Tree Closeout Record ... 107

EXECUTIVE SUMMARY

On January 7, 2001, the Genesis spacecraft lifted off from Cape Canaveral. Its mission was to collect solar wind samples and return those samples to Earth for detailed analysis by scientists. The mission proceeded successfully for three-and-a-half years. On September 8, 2004, the spacecraft approached Earth, pointed the Sample Return Capsule (SRC) at its entry target, and then fired pyros that jettisoned the SRC. The SRC carried the valuable samples collected over the prior 29 months. The SRC also contained the requisite hardware (mechanisms, parachutes, and electronics) to manage the process of entry, descent, and landing (EDL). After entering Earth's atmosphere, the SRC was expected to open a drogue parachute. This should have been followed by a pyro event to release the drogue chute, and then by a pyro event to deploy the main parachute at an approximate elevation of 6.7 kilometers. As the SRC descended to the Utah landing site, helicopters were in position to capture the SRC before the capsule touched down.

On September 8, 2004, observers of the SRC's triumphant return became concerned as the NASA announcer fell silent, and then became even more alarmed as they watched the spacecraft tumble as it streaked across the sky. Long-distance cameras clearly showed that the drogue parachute had not deployed properly.

On September 9, 2004, General Eugene Tattini, Deputy Director of the Jet Propulsion Laboratory formed a Failure Review Board (FRB). This board was charged with investigating the cause of the Genesis mishap in close concert with the NASA Mishap Investigation Board (MIB). The JPL-FRB was populated with experts from within and external to the Jet Propulsion Laboratory. The JPL-FRB participated with the NASA-MIB through all phases of the investigation, working jointly and concurrently as one team to discover the facts of the mishap. Board members are listed below.

Member	Organization	Discipline
John Klein	JPL, Chair	Management, power systems
Rob Manning	JPL, Co-chair	Systems
Ed Barry	USAF, retired	Project management
Jim Donaldson	JPL	Avionics systems
Tom Rivellini	JPL	Mechanical systems
Steven Battel	Consultant	Spacecraft engineering
Joe Savino	JPL	Avionics and power systems
Wayne Lee	JPL	Entry systems
Jerry Dalton	JPL	Electronics reliability, circuit analysis
Mark Underwood	JPL	Battery, power systems
Rao Surampudi	JPL	Batteries
Arden Accord	JPL	System test, Validation & Verification
Dave Perkins	LMA	Systems
Kirk Barrow	JPL	Mission assurance
Bob Wilson	JPL	Safety

A comprehensive Mission Fault Tree (MFT) was developed focusing on the "drogue parachute not deployed" fault. The MFT contained a catalog of approximately 80 leaf faults, which fell into 4 major categories.

- Electrical power failure in the SRC
- Avionic failure in the SRC
- Harness/connector failure
- Drogue system failure

A careful examination of the MFT concluded that a failure within the Avionics SRC was the only credible fault. In addition, Lockheed Martin Aerospace came forward shortly after the impact with evidence that indicated the G-switches were the only common point which could have caused the failure and the events seen. Upon further analysis, it was discovered that the G-switch was designed and placed in the SRC-Avionics Unit (AU) 180 degrees out of phase. However, no comprehensive system or board level tests were performed prelaunch that might have uncovered the design error.

The JPL-FRB was also asked to investigate the contingency planning and systems safety employed during the Genesis mishap. It was already known that, upon impact and recovery, a number of personnel were close to the return canister. A review of the contingency plans was initiated to ensure proper procedures had been followed, and to improve plans and procedures, as necessary.

The JPL-FRB developed a number of root causes and recommendations to improve future performance. The following is a list of those root causes and specific recommendations.

Systems Engineering. There was a lack of penetration and oversight by the JPL and contractor systems engineering teams.

R1 (Recommendation 1): Ensure that JPL is involved in all program system-verification changes

R2: Assign JPL mission mode systems engineers for critical mission events

R3: Develop an incompressible test list and monitor its completeness

R4: Use a common risk management system across the project

Project Management. The JPL development project manager empowered the LMA project manager for all aspects of the design, build, and verification of the hardware and software in accordance with the verification matrix. Neither JPL nor LMA had a systems engineering staff large enough to perform the appropriate systems checks and balances. LMA's Genesis performance was a best effort within a profit and loss cost constraint.

R5: Require JPL project managers to institute a formal process for systems engineering checks and balances with specific responsibility, accountability, and authority for systems and subsystems

R6: Change the fee structure for a profit-and-loss contractor to a fixed fee of 4% to 6% with an award fee of 9% to 11%, based principally on cost and program management performance.

Heritage. The project utilized a high-heritage design for the SRC-Avionics Unit during the proposal phase. Shortly thereafter, the layout heritage of the SRC-AU was significantly modified. The project, however, did not truly understand that the heritage was broken and, consequently, more careful oversight was needed.

R7: Ensure that heritage hardware goes through the same strenuous verification and review process as new designs.

Test As You Fly. The project during development and integration did not develop a comprehensive Test As You Fly exceptions list. The lack of an end to end test to verify correct phasing of the G-switches, or an independent review of the "verify by inspection/analysis" descope to eliminate the phasing test was a "last chance" to have uncovered the design error.

R8: Develop a comprehensive Test As You Fly exceptions list and present it at each major review.

Red Team Reviews. Genesis was the first project to implement the red team concept. Due to the fast pace of the review, many red team members did not have the time to probe deeply enough to ascertain the soundness of the verification process.

R9: Hold a project Independent Readiness Review, headed by the systems engineering team members assigned to the project, and augmented by a systems engineering/chief engineering staff assigned to a core organization (in this case JPL).

Inadequate Resources to Properly Prepare for the Event. A shortcoming of the Genesis preparation was the minimal amount of coordinated training for recovery.

R10: Update *JPL Flight Project Practices* to identify adequate funding and schedule margin during the late mission time frame necessary to support late mission-critical activities.

Insufficient Leadership Attention. "Safety first" was not an adequate part of the whole management approach. Although there was a directive to comply with safety issues, especially in the area of PPE, issued by the project manager, there was no obvious commitment to do so by the other members of the project leadership.

R11: Require safety plans for sample return missions to be approved and signed off by the cognizant "Director-for" for both the safety organization and the project directorate.

Inconsistent Contingency Planning and Preparation. There was no single document defining the contingency plan and associated operations. There were no training exercises for the various contingency situations.

R12: Provide project management training to ensure necessary attention is given to contingency plans; incorporate a section on safety and contingency planning into project manager workshops.

R13: Require a single overarching contingency plan at the project level for all missions.

Poor Communication at the Scene. Personnel on the scene were not equipped with proper communication capabilities; consequently, intentions were confused and conflicting.

R14: Clearly identify requirements for recovery-type missions to ensure effective communication between the project manager and the on-site personnel, as well as among on-site personnel.

1. GENESIS MISSION DESCRIPTION

1.1 BACKGROUND

The Genesis mission was conceived about a decade ago, when Don Burnett of Caltech, Ben Clark of Lockheed Martin Aeronautics (LMA), and Marcia Neugebauer of the Jet Propulsion Laboratory (JPL) developed the concept of a mission to return solar matter to Earth for laboratory isotopic and chemical analyses. After several years of early feasibility planning, a multi-institutional team was created to respond to the 1995 Discovery IV NASA request for proposals. A Phase A mission analysis was completed (then called "Suess-Urey") during Discovery IV, but the proposal finished a close second to Stardust in a field of about 30 entries. The team was reassembled in 1997 to prepare an improved submission for Discovery V, and this time Genesis won. Phase B of Genesis began in December of that year and ended on July 31, 1998.

1.1 SCIENCE

The Sun continuously emits a stream of energetic ions, a phenomenon known as the "solar wind." Current scientific theory suggests that the elemental composition of the solar wind broadly mirrors that of the outer regions of the Sun. Since the Sun contains most of the mass in the solar system, it makes sense that the composition of the Sun, essentially by definition, would also be the average composition of the solar system. Differences in composition between the Sun and various other parts of the solar system (e.g., planets, asteroids, comets) form the average for the solar system in regard to particular elements or isotopes. Examining such differences is widely recognized as the most powerful way to probe the conditions prevailing, and processes that occurred, during the formation and evolution of the solar system. In general, theories of planet formation and evolution lead to predictions of the elemental and isotopic composition of the various bodies in the solar system relative to the average for the solar system. Solar composition provides a baseline for assessing fractionation and loss processes in solar system bodies, particularly for volatiles. It also provides a basis for judging the veracity of various theories of solar system formation.

1.1.1 Science Objectives

These were the baseline Genesis science objectives:

- Achieve a major improvement in our knowledge of the average chemical and isotopic composition of the solar system.
- Provide a reservoir of solar material for twenty-first century science.
- Create greatly improved models of the nebular processes driving the formation of planetary materials and the various bodies in the solar system (planets, comets, asteroids, Kuiper belt, bodies yet to be discovered, etc.).

From a consideration of which elements and isotopes were most important for study, a set of prioritized measurement objectives was developed (Table 1-1). Based on feasibility, some measurements were scheduled for early analysis and publication (i.e., within one year after sample return) to ensure the timeliness of reporting mission results. These are designated as "early science return" in the table.

Table 1-1. Prioritized Measurement Objectives

Required Objectives
1. O isotopes
1. N isotopes in bulk solar wind[a]
1. Noble gas elements and isotopes[a]
1. Noble gas elements and isotopes; regimes
Non-Required Objectives
1. C isotopes[a]
1. C isotopes in different solar wind regimes
1. Mg, Ca, Ti, Cr, and Ba isotopes
1. Key first ionization potential elements
1. Mass 80–100 and 120–140[b] elemental abundance patterns
1. Survey of solar vs. terrestrial isotopic differences
1. Noble gas and N elements and isotopes for higher energy solar articles
1. Li/Be/B elemental and isotopic abundances
1. Radioactive nuclei in the solar wind[a]
1. F abundance
1. Pt-group elemental abundances
1. Key s-process heavy elements
1. Heavy vs. light element comparisons
1. Solar rare-Earth elements abundance pattern
1. Comparison of solar and chondritic elemental abundances

[a]Early science return [b]Atomic units

1.1.1 Science Requirements

The *Genesis Science Requirements* document (JPL D-31427) defines requirements on:

- Placement of solar wind collectors
- Surface area of solar wind collectors
- Duration of collection
- Thermal constraints
- Contamination constraints
- Performance of the solar wind concentrator
- Performance of the solar wind monitors
- Fields-of-view and pointing
- Data
- Curating and archiving of returned samples

1.2 MISSION DESIGN

The Genesis spacecraft was launched on a low-energy trajectory (C3 = –0.6) to L1, the so-called Sun–Earth libration point, approximately 1.5 million km away from the Earth (approximately 1% of the Earth–Sun distance). This placed the spacecraft in a location where the gravitational pulls of the Sun and Earth are balanced, well beyond the confounding influence of Earth's magnetosphere. During the 3-month cruise to L1, the Sample Return Capsule (SRC) was open-facing to the Sun.

The spacecraft was placed into an elliptical halo orbit (axes 700,000 × 300,000 km, 6-month period) in a plane approximately perpendicular to the Earth–Sun line, allowing long dwell times with minimum propellant expenditure. After orbit insertion, the ultra-pure collectors were exposed to the incoming solar wind flux, allowing ions from the solar wind to be implanted and accumulated in the collector materials. After 22 months, the collectors were stowed in a contamination-tight canister and returned to Earth (Figure 1-1). The design called for separation of the SRC from the spacecraft, and re-entry into the atmosphere for recovery in the Utah Training Test Range (UTTR). A 19-day parking orbit prior to Earth entry was available, if necessary.

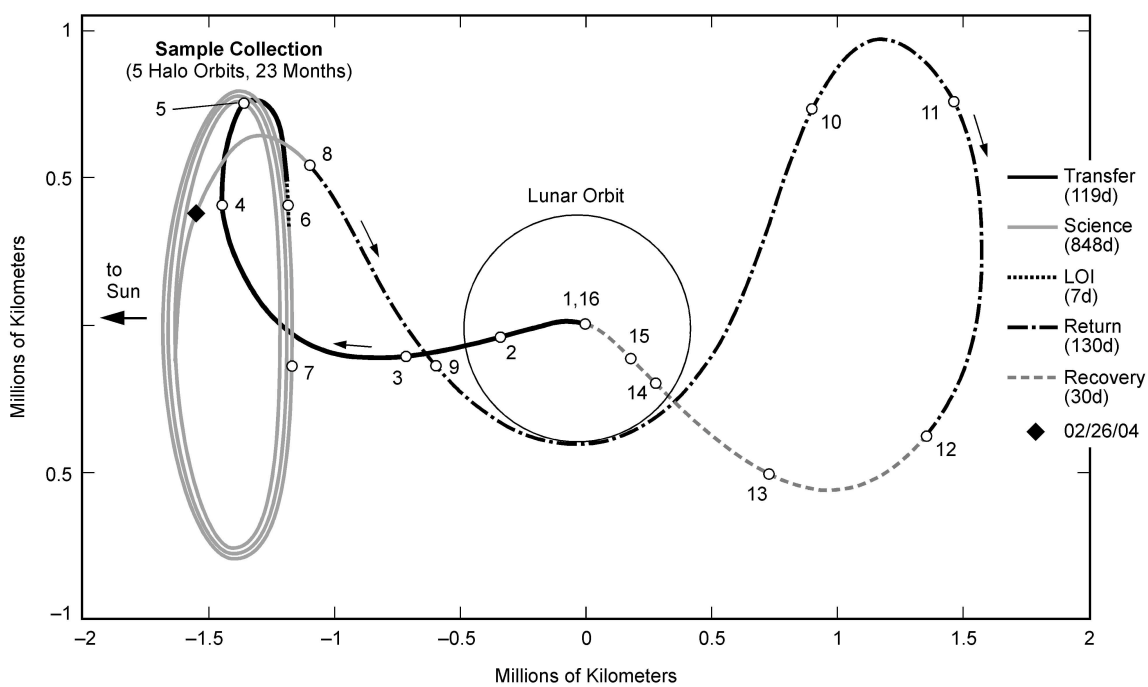

Figure 1-1. Genesis mission trajectory

1.	Launch	8/8/01	9.	TCM 6	4/22/04
2.	Trajectory correction maneuver (TCM) 1	8/10/01	10.	TCM 7	5/25/04
3.	TCM 2	Cancelled	11.	TCM 8	6/30/04
4.	TCM 3	Cancelled	12.	TCM 9	8/9/04
5.	TCM 4	Cancelled	13.	TCM 10	8/29/04
6.	Lissajous orbit insertion	11/16/01	14.	TCM 11	9/6/04
7.	Begin science collection	12/5/01	15.	TCM 12	Cancelled
8.	End science collection	4/1/04	16.	Entry	9/8/04

1.3 SYSTEM ARCHITECTURE

The Genesis system has three major elements:

- The payload
- The sample return capsule
- The spacecraft engineering platform (e.g., the spacecraft)

The payload was enclosed within the SRC and mounted to the spacecraft deck for launch and flight.

1.3.1 Payload

The Genesis payload, the means for acquiring solar wind samples and encapsulating them in a canister for return to Earth, was designed to serve the following functions:

- Provide critical data to determine which of three specific regimes of solar wind is prevalent at any time;
- Expose ultra-clean passive arrays of collector materials to the solar wind outside of Earth's magnetosphere, and thereby collect solar matter for approximately 2 years;
- Concentrate by a factor of >20:1 and capture N, O, and other light elements onto a target for laboratory chemical analysis; and
- Provide an ultra-clean canister to keep collection materials contamination-free.

The major design constraint on the payload was to utilize as large a collection area as possible while minimizing risks of contamination or malfunction. The wafer-thin solar wind collectors were mounted on rigid arrays for maximum hardness and deployed in space by means of simple rigid rotations (Figure 1-2). Collector arrays and concentrator were kept very clean by housing them in a sealed canister. The diameter of the SRC was made as large as possible to maximize the exposed area of solar wind collectors, while remaining within launch vehicle mass and diameter limits (1.46 m maximum SRC diameter accommodates 0.85 m maximum canister envelope diameter).

The payload consisted of

- Five arrays of solar wind collectors
- An electrostatic concentrator to concentrate the fluence of N, O, and other light ions in the solar wind onto a small target for collection
- A canister in the SRC for storing the collectors and concentrator in an ultra-clean environment
- A pair of solar wind monitor instruments for determining the regime of solar wind at any time in order to control deployment of collectors and voltages on the concentrator

1.3.1.1 PAYLOAD SCIENCE

Collecting samples from different regimes enables an important capability to correct for possible differences between composition of the solar wind and the outer layers of the Sun. Genesis used ion and electron monitors to measure properties of the solar wind. The three major solar wind regimes were:

- High-speed streams from coronal holes
- Low-speed interstream wind
- Transient wind associated with coronal mass ejections

The monitors were mounted on the spacecraft bus and measure properties such as:

- H/He ratio
- Bulk wind velocity
- Ion and electron temperatures
- Densities
- Angular distribution of electrons

These data were fed into an expert system resident in the spacecraft computer that sensed solar wind flux in real time. When such a change occured, the system commanded mechanical actuators to expose the proper individual solar wind collector array and change the voltage on the concentrator appropriately.

Figure 1-2. Typical collector arrays

Collecting precise data on the isotopes of N and O in the solar wind was a particularly high priority Genesis science objective. For N and O this posed a special challenge because of the ubiquitous nature of atmospheric and organic contamination during manufacture and preparation of materials. For this reason, Genesis used a parabolic electrostatic concentrator (Figure 1-3), in addition to the flat arrays, to collect C, N, and O. This concentrator was an electrostatic analog of an optical reflector telescope and increased the signal-to-background ratio on the collector target. The solar wind ions impinging on the 40-cm aperture of the electrostatic concentrator were first reflected and then focused by the electric field onto a 6-cm-diameter target.

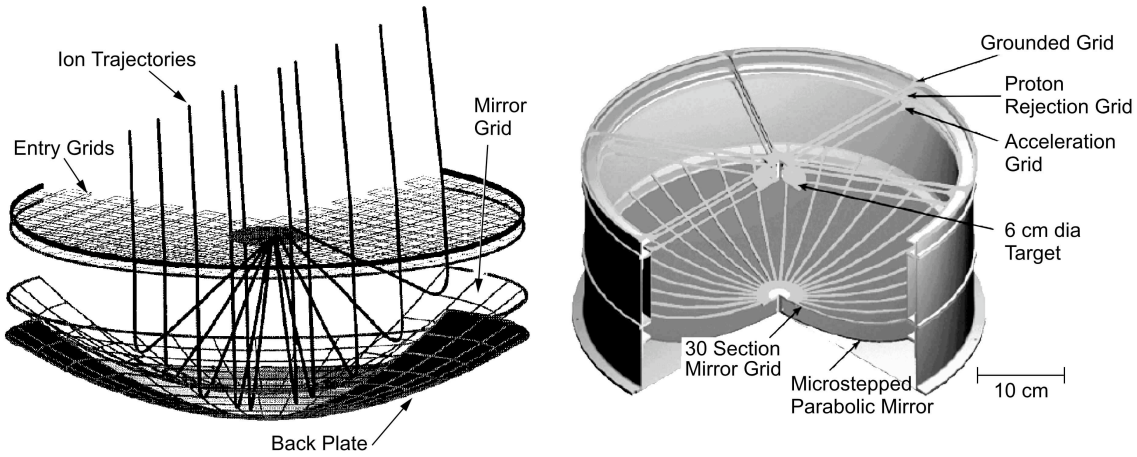

Figure 1-3. Genesis parabolic concentrator

1.3.2 Sample Return Capsule and Spacecraft

The SRC was designed with minimal requirements when compared to traditional entry vehicles. It required no active attitude control, propulsion, or active thermal control. The SRC housed the science canister and provided for its safe return. The heat shield configuration, a 60-degree half-angle cone, provided for a highly stable attitude throughout descent. The low ballistic number of the SRC resulted in a subsonic, low-dynamic-pressure parachute deployment environment. The mortar-deployed drogue parachute pulled off the backshell and deployed the main parachute. The SRC avionics included lightweight battery-powered tracking aids to support SRC recovery at UTTR. The Genesis spacecraft is shown in Figure 1-4.

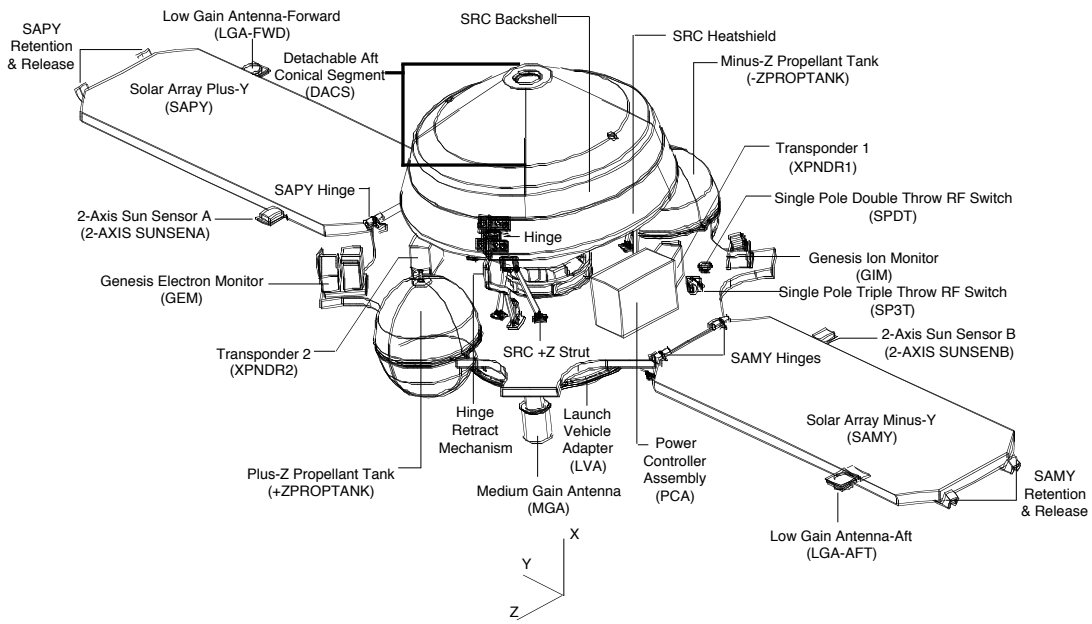

Figure 1-4. Genesis spacecraft

The Genesis spacecraft was designed to operate exclusively as a spinner to reduce the cost of mission operations. During sample collection, it was absolutely necessary to keep the spin axis pointed 4 degrees ahead of the Sun direction to account for the aberration of the solar wind flow (caused by the spacecraft's orbital motion). In this way, the spin axis, collectors, and monitors continuously pointed into the average direction of the solar wind flow. Attitude control was provided by thrusters (no reaction wheels are required). Attitude knowledge was provided by redundant star trackers (no inertial measurement units are needed). Because the Genesis spacecraft

- was a spinner,
- did not move in and out of Earth's shadow, and
- was flown predominantly at 1.0±.01 AU from the Sun,

the thermal variations that normally drive spacecraft temperature control were minimal and could be achieved with passive thermal design. However, because the collector arrays and the concentrator

were constantly exposed to the Sun, and because of the science requirement to keep the collectors' temperature below 200°C to prevent migration of the imbedded ions, the design of the SRC and canister was tailored to accommodate the thermal limits and avoid introducing any contaminants.

Spacecraft power was provided by two non-articulated 1.5-m^2 (each) solar array panels. The 265 W (end of life) produced by the panels represented a margin of nearly 41% over spacecraft requirements. Also included was a NiH_2 secondary battery to provide energy during the brief and infrequent trajectory correction maneuvers.

The Genesis open-architecture Command and Data Handling (C&DH) subsystem was based on a RAD 6000 processor. It featured redundant processors, uplink/downlink, input/output, and payload/attitude control functions. The C&DH subsystem provided significant margin on throughput, command rates and telemetry rates, as well as 1 Gbit of science and engineering data storage. This eliminated the need for external solid state or tape recorders.

The telecommunications requirements for Genesis were modest due to the constant close proximity to Earth (0.01 AU) and the low instrument data rate (note that the only instruments generating data were the solar wind monitors at <1 kbps). This allowed infrequent (no more often than weekly) communication cycles with the Deep Space Network.

1.4 MISSION OPERATIONS

Due to the need for precise navigation, tracking for the Genesis mission was driven by the acquisition of Doppler and range data. While specific coverage varied during different phases of the mission, the nominal coverage algorithm was at least 2 hours of two-way coherent tracking every other day. Science requirements to downlink instrument telemetry with at least one contact per week were accommodated within the coverage for navigation, and commanding occurred no more than once per week.

Genesis payload, engineering, and navigation data were routed through the existing standard JPL multi-mission data capture system, utilizing a secure local-area network, to the dedicated Genesis mission database. Members of the Genesis flight team at JPL, LMA, and Los Alamos National Laboratory (LANL) accessed the database as needed to execute their specific tasks. In the other direction, spacecraft command sequences were forwarded by the multi-mission control system through the Deep Space Network to the spacecraft. In all cases standard information transfer packets were utilized.

A team from LMA maintained the health of the spacecraft platform. They downloaded engineering data from the mission database, conducted analyses to confirm proper operation, and generated command updates only when necessary (such as to conduct a maneuver). A team at JPL was responsible for mission planning and assembling the integrated sequences of commands, ensuring that all science/engineering/ancilliary data were available both for analysis and for navigating the spacecraft. A small science team at LANL telemetered data from the solar wind monitors to ensure that the monitors and collectors were functioning correctly.

The SRC recovery phase of the Genesis mission was designed to utilize day-side entry to the UTTR site, with the opportunity to go into a 19-day parking orbit in the event of unfavorable weather conditions at UTTR. Factors such as navigation and maneuver errors at the final trajectory correction maneuver, coupled with uncertainties in the SRC and atmospheric conditions, resulted in an 84-km by 30-km recovery footprint, well within the dimensions of the UTTR site.

2. TECHNICAL INVESTIGATION

On September 8, 2004, the Genesis sample return capsule returned to Earth. The SRC was closely tracked, first by radar and then by visible cameras. Long-distance cameras clearly showed that the parachute had not deployed properly. The SRC struck the Earth at 15:58:52 (Universal Time Coordinated, or UTC).

Within an hour of the landing of the Genesis sample return capsule, both LMA and JPL team members began drafting a Drogue Not Deployed Mission Fault Tree (DND-MFT) that would guide the inevitable failure analysis efforts. The fault tree began as a list of possible causes, ordered by plausibility of occurrence, and grew to a catalog of about 80 so-called leaf faults.

2.1 PROXIMATE CAUSE[1]: DROGUE NOT DEPLOYED (DND)

A comprehensive Mission Fault Tree (MFT) was maintained by the Genesis project (with oversight from the Mission Assurance Manager) for the duration of Phase C/D (development) and periodically updated during Phase E (operations). This fault tree contained hundreds of entries covering most launch—and all post-launch—mission events. And, while it enumerated SRC entry failures (including G-switch failures), failure to initiate timely ejection of the drogue mortar (and related events) was considered a *double* fault and therefore highly unlikely. Since systemic hardware design errors were presumed to have been mitigated during the project's development phase, the MFT was only used to provide input to the more detailed fault tree starting at the "Drogue Not Deployed" branch.

The DND-MFT was maintained initially by LMA before being handed over to the Mishap Investigation Board/Failure Review Board (MIB/FRB) team for maintenance and update. The fault tree ultimately used and maintained by the MIB/FRB was an indentured (hierarchical) spreadsheet.

Every effort was made to ensure the fault tree was comprehensive and well-organized. As tests, inferences, analyses, and/or inspections were carried out, branches of the tree could be 'pruned' when those branches were ruled out as likely causes. Despite an early announcement concluding it was highly likely that the G-switch orientation was a credible root cause, it was essential to keep the fault tree sufficiently broad so that other, less-obvious possible causes were not overlooked (or at least be designated as unlikely).

Once the details of the fault tree were established, closure plans were developed that described how each branch or a leaf of the tree could be closed (i.e., determined to be or not to be a candidate proximate cause). Sub-teams of MIB/FRB personnel, with close cooperation from the Genesis JPL and LMA team members, took ownership for close-out plans of specific branches. These plans consisted of recommendations to perform a specific analysis (e.g., reconstruction of the incoming trajectory), inspections (e.g., X-rays of the residual hardware), and tests (e.g., operational verification

[1] The following definitions are found in *NASA Procedural Requirements for Mishap Reporting, Investigating, and Recordkeeping* (NASA NPR 8621.1). Proximate Cause: The event(s) that occurred, including any condition(s) that existed immediately before the undesired outcome that directly resulted in its occurrence and, if eliminated or modified, would have prevented the undesired outcome. Also known as the direct cause(s). Root Cause: One of the multiple factors (events, conditions, or organizational issues) that contributed to or created the proximate cause and subsequent undesired outcome and, if eliminated or modified, would have prevented the undesired outcome. Multiple root causes typically contribute to an undesired outcome.

of the engineering model SRC avionics). MIB/FRB sub-teams scrubbed the plans for redundancy and prioritized the work associated with each plan. The fault tree master spreadsheet was then back-annotated with references to the (approved) closure plan for each branch and leaf.

After the plans were approved, procedures were written, where necessary (e.g., inspection and handling procedures that affected the residual hardware were essential). A single point of contact within the MIB was established to coordinate all inspections and analyses. As new observations were made, additional inspections, tests, and analyses were requested. The entire process took place over the course of about 8 weeks. Once completed, a close-out record was generated that attested to the probability that a branch or leaf was a likely cause. A leaf (or branch and all of its leaves) could be assigned a rating of "closed credible," "closed not credible," or "closed unlikely." All 80 leaves were either closed or combined into higher-level branches, as summarized in Table 2-1.

Table 2-1. Fault Tree Close-Outs

Combined with higher branches	13
Closed as Not Credible	47
Closed as Unlikely	19
Closed as Credible	1
Total	**80**

2.2 FAULT CATEGORIES

All faults were classified under one of four branches (Figure 2-1):

1. Electrical Power Failure in SRC
2. Avionics Failure in SRC
3. Harness/Connector Failure
4. Drogue System Failure

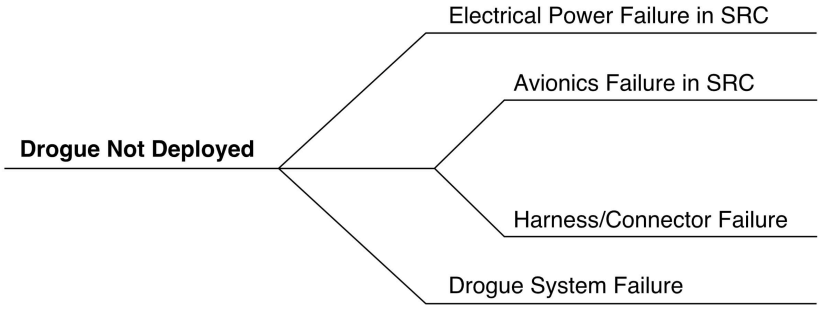

Figure 2-1. Top-level faults shown as a fishbone diagram

These four branches and the first sub-tier branches of the DND-MFT are presented as an indentured spreadsheet in Table 2-2. The MIB and FRB drew upon this spreadsheet extensively because of its ease of use and completeness. In general, each branch contains one or more sub-tier

branches or leaves, yielding a total of 80 faults (at the bottom of the hierarchy). The branches were assigned one of four values: "credible," "unlikely," "not credible," or "combined with higher branches." Only sub-branch 2.1 ("G-Switch Did Not Activate"), leaf 2.1.1 ("Improper Orientation of G-Switch," see Appendix A, Table A-1a), was closed as credible. All other faults were deemed unlikely or not credible based on the post-failure evidence.

For example, extensive analysis of the battery pre-landed (launch and cruise) environments and post-failure analysis of the batteries, as well as avionics design and hardware inspections and tests, led to the conclusion that an "Electrical Power Failure in the SRC" was an unlikely cause (Section 3.2.1). Inspection of the design and as-built configurations of the avionics led to the elimination of other SRC avionics faults as credible failures, but did uncover the G-switch as the root cause (Section 3.2.2). Post-failure inspections of harnesses and connectors led to the conclusion that the "Harness/Connector Failure" was unlikely (Section 3.2.3). Likewise, post-failure inspection quickly determined that "Drogue System Failure" was unlikely (or not credible) based on the observations that neither string of the drogue mortar pyros (NASA standard initiators (NSI)) had been fired.

Table 2-2. Top-Level Faults

No.	Fault Type	Assigned Value		
		Credible	Unlikely	Not Credible
1.0	**Electrical Power Failure in SRC**		**X**	
1.1	Spacecraft bus sequence wrong			**X**
1.2	Power state of circuits incorrect (relays)		**X**	
1.3	Power electronics design flaw			**X**
1.4	Power disconnected on entry			**X**
1.5	Entry thermal environment effects		**X**	
1.6	Inadequate battery voltage/power for avionics or pyros		**X**	
2.0	**Avionics Failure in SRC**	**X**		
2.1	G-switch did not activate sequencer	**X**		
2.2	Low-pass filter wrong time constant			**X**
2.3	Reset on timer trigger		**X**	
2.4	Oscillator frequency incorrect			**X**
2.5	Latent fault due to high-voltage discharge			**X**
2.6	Pyro ballast (current limiting) resistors damaged in test			**X**
2.7	Timing of "And"ed circuits out of phase			**X**
2.8	Timer jumpers wrong causing excess delay			**X**
2.9	EMI disrupted circuit operation			**X**
2.10	Environment effects on avionics		**X**	
2.11	Pressure transducer interferes with fire command			**X**
2.12	Avionics shorted (internal)			**X**
2.13	Fuses opened			**X**
3.0	**Harness/Connector Failure**		**X**	
3.1	Circuits not connected to pyro		**X**	
3.2	Harness open		**X**	
3.3	Harness shorted		**X**	
4.0	**Drogue System Failure**		**X**	
4.1	Pyro failed		**X**	
4.2	Drogue parachute did not deploy			**X**

This systematic approach for elimination of all possible causes is the foundation for all conclusions reached by this report. Appendix A contains a complete list of the faults that were enumerated by the FRB and MIB.

2.2.1 Fault 1: Electrical Failure in SRC

A key factor that quickly emerged in the investigation was the ability of the Genesis SRC battery to deliver enough energy to fire the pyrotechnics. The SRC battery experienced well-documented and unplanned thermal excursions while unused in flight. This history fueled early speculation that the battery may have been unable to deliver the required energy to initiate the pyrotechnics during entry. Observations made by the team examining the battery include:

- Before SRC release from the spacecraft, the depassivation of the batteries was completed and the data received indicated that the batteries were in good health. The extensive testing program tracking battery temperature provided confidence that the flight cells had the capability to support the Genesis Entry, Descent, and Landing (EDL) sequence. No other data was received from the SRC after the cables were cut.
- At the impact site, sulfur dioxide (SO_2) was sensed within about an hour of impact. This indicated that at least one of the 16 cells in the battery had vented, or opened up, discharging its contents. No SO_2 was sensed at any other time in the handling of the battery despite continuous use of SO_2 monitors when the battery was not in a closed container.
- There are two 8-cell batteries. At UTTR, within hours of the impact, and later at JPL, battery voltages always read less than 3 V. A battery of this type is considered fully discharged when the voltage drops below 8 V during discharge. A fully discharged but otherwise healthy cell will still deliver an open-circuit voltage of ~2.9 V, resulting in an expected battery voltage of >20 V. Such a low voltage (3 V) is usually indicative of multiple cell ventings.
- Upon opening the battery case, the Eccofoam potting was observed to have been generally heated and burned (blackened) in specific areas. Based on the color patterns, the heating was most intense near the center cells, with very little heating near the corners of the battery case. The burnt areas were strips that coincided with the tabs connecting one cell to the next. Additionally, the insulation between the tabs and the tops of the cells was blackened. Evidence of this burning was visible on the top every cell. With further disassembly, the electrical components of the battery were found to be operational. The temperature sensors still matched the output of a pristine device and the back-current blocking diodes still tested properly. However, the mounting boards for the diodes showed darkening consistent with excessive heating under the body of the diode.
- At the cell level, all 16 cells were found to have vented. The cells are manufactured with two safety vents designed to open and relieve excessive internal pressure. This prevents the cell from releasing high amounts of energy and unpredictably opening when overheated. The manufacturer expects one vent to open if the cell is heated, to greater than about 100°C, particularly by an *external* short. This would be considered a normal venting episode. Both vents will open if the heating rate is excessive, such as by an *internal* short. This would be an abnormal venting episode. In the case of the SRC battery, none of the cells were observed to have both vents open, suggesting that all of the cells vented in a normal and similar manner.
- Finally, external to the SRC battery box, areas on the battery cable exhibited melting (and the melting appeared to have occurred in air). This is the battery cable that carried the hot and return wires for both batteries that make up the SRC battery (National Transportation Safety Board (NTSB) Report, Appendix C).

2.2.1.1 Background: Likely Sequence of Events

The depassivation data, post-impact temperature sensor operation, and the battery-testing program all support the conclusion that the battery was ready to support SRC entry. It is unlikely that the SRC battery failed early in the entry sequence.

It is likely that the remaining battery energy was discharged into electrical shorts after impact. High-current shorts were developed through a short in the battery cable. The battery self-heated at high discharge rates (up to 50 A), which led to venting of at least 1 cell per 8-cell string. The manufacturer expects the cells to vent within 1 to 4 minutes when the battery terminals are shorted together. Normally, one vented cell results in high string impedance that stops the high-rate discharge. Thus, usually only one cell in a string would be expected to vent. Yet we observed that all the cells were vented. We postulated several options that could result in all cells venting, including:

- Environmental heating (whole battery >100°C)
- Exothermic chemical reactions (especially with the potting)
- Internal shorting of each cell
- External shorting of each cell

Environmental heating is an unlikely cause since SRC temperatures stayed within expected limits during entry. In addition, the discoloration pattern on the Eccofoam pointed to an internal heat source. No evidence was found for chemical reactions in the potting material, so that source of heating is also unlikely. Shorting of the cells internally is certainly a possibility given the violence of the impact. However, since only one cell vent opened on each of the cells and no internal anomalies were observed in the cell X-rays, internal shorts were considered unlikely.

The likely cause for all cells to vent is external shorting. The observed "burning" of Eccofoam in the vicinity of the tabs and the blackened insulation under the tabs leads to the conclusion that the tabs were very hot. Eccofoam heated in air was observed to turn black at about 200°C. Calculations show that nickel tabs could reach 500°C within seconds at short-circuit currents. As built, the positive tab from the cell top was tightly strung over the edge of the negative case cell and attached to the sidewall of the adjacent cell in the string. The manufacturer reported that they pulled the tabs tight to make sure that any cell movement would cause a tab to break, thus effectively working as a mechanical fuse in the case of a severe impact. The battery did not include a fuse or any other device to limit short-circuit battery current.

The insulating materials between each tab and the cell cases were shrink wrap and mylar tape, polymeric materials that melt at low temperatures (<100° and 130°C, respectively). It is likely that the hot tabs melted through this insulation well before the cells would have discharged enough to over-heat and vent. With the insulation gone, the positive tabs shorted directly to the negative case for each cell. Each cell therefore developed an individual external short that discharged each one at a high rate until individually they vented due to self-heating.

Therefore, our conclusion is that an external short at the battery level resulted in a high-rate discharge, causing overheating of the positive tabs of each cell, shorting the tab to the cell's case.

This dead short at the cell level resulted in every cell venting within a few minutes of the initiating external short. A detailed report of the battery investigation can be found in Appendix B.

Consideration

Where there is no battery-level current-limiting device, such as a fuse, it would be helpful for battery manufacturers use higher temperature insulation between the tabs and the cell.

2.2.1.2 Conclusion

Based on the scenario described above, it is likely that the battery energy was discharged post-impact, and enough energy was available to overheat and vent each cell. Therefore, the battery contained enough energy to power the SRC entry sequence. The battery was uninvolved in the mishap. This item, "Electrical Power Failure in the SRC," was closed as unlikely.

2.2.2 Fault 2: Avionics Failure in SRC

The two avionics units, or boxes, contained the drive electronics that controlled the extension and retraction of the solar wind collectors (shown in Figure 2-2). Each box was a block-redundant electronic assembly containing three electronics boards, or circuit cards. Power came from two independent batteries housed in a single-assembly battery box. The avionics units were controlled by commands from C&DH subsystem software; they did not themselves contain a processor or run software of any kind.

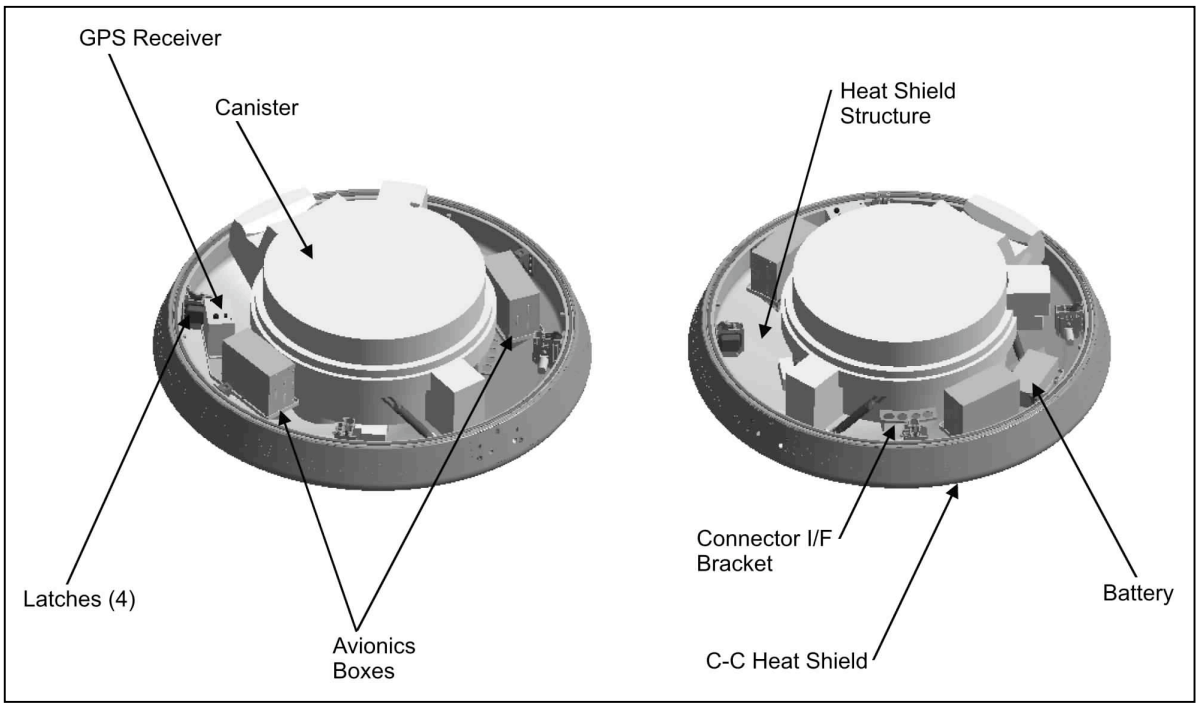

Figure 2-2. SRC mechanical assembly

During the return trip to Earth, after achieving the correct orientation, C&DH issued commands for the SRC to begin operating on battery power. Then, after separation from the Genesis spacecraft, SRC avionics was left entirely in control of onboard SRC mechanisms. G-switches were to detect the deceleration of the SRC as it entered the atmosphere, initiating timers designed to trigger the three critical events calculated to ensure a safe return of the SRC to Earth—drogue chute deployment, drogue cable cut, and main chute deployment (Table 2-3). Final-approach events and the expected landing timeline for the nominal mission are illustrated in Figures 2-3 and 2-4, respectively.

Table 2-3. EDL Pyro Event Timeline

Event	Description	Purpose	Pyro Count	Time
1	Drogue Chute Deployment	Slow SRC following atmospheric entry	2	15:54:53
2	Drogue Cable Cut	Release drogue chute in preparation for event #3	2	15:56:20
3	Release DACS	Release main chute	6	15:59:07

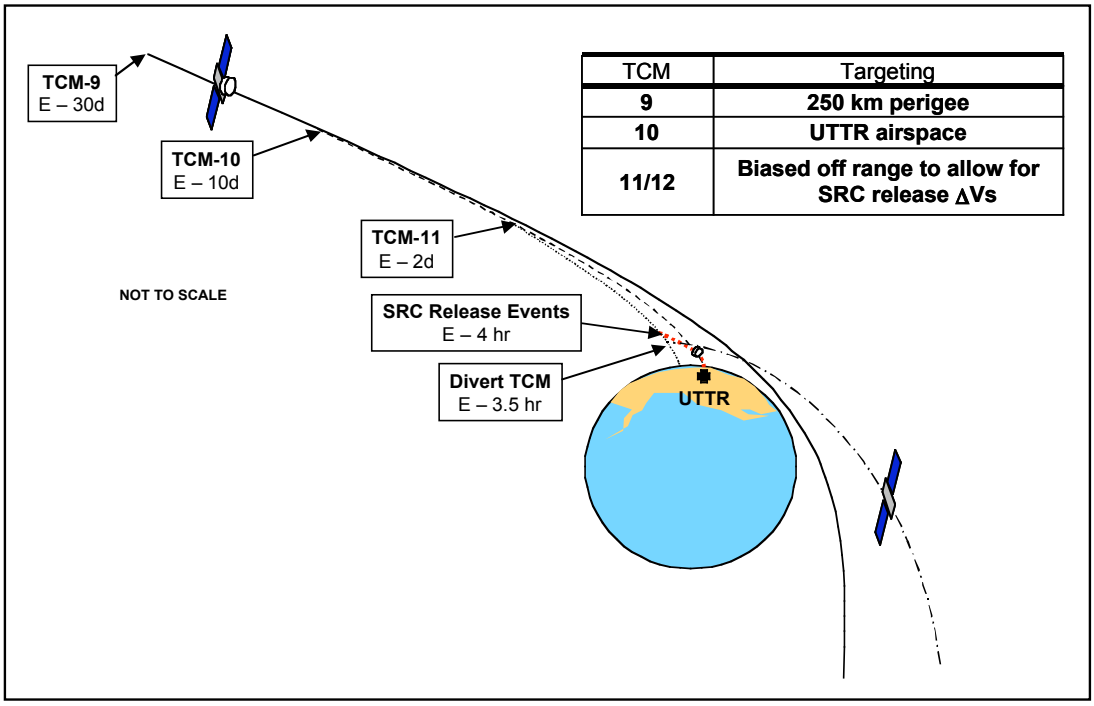

Figure 2-3. Spacecraft final TCMs and SRC release event timeline

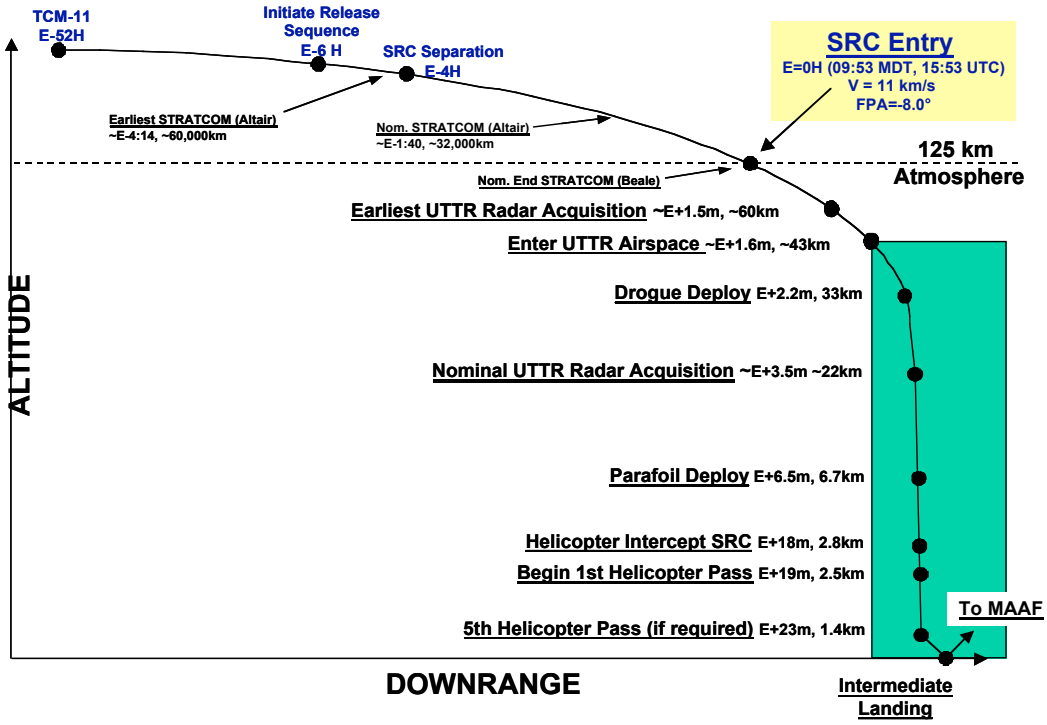

Figure 2-4. Genesis SRC Earth-entry timeline

Table 2-4 contains the actual mission timeline and shows when the Drogue Chute failed to deploy, resulting in a very hard impact with Earth at 15:58:52 UTC. Figure 2-5 illustrates the expected magnitude of the deceleration force and the timeline for subsequent pyro events. All three pyro event times were contingent on detecting the initial deceleration event.

Table 2-4. Genesis SRC EDL Timeline (Actual)

Event	Entry Time (mm:ss)	UTC (hh:mm:ss)	Altitude (MSL, km)	
Capsule Separation	EI-4 hours	11:52:47	59471	
Entry Interface	00:00	15:52:47	135	22
Sensible Atmosphere	00:23	15:53:10	102	38
3-g Point (Increasing)	00:45	15:53:32	75	37
Peak Heating	00:59	15:53:46	60	30
Peak Loads	01:10	15:53:57	52	21
3-g Trigger Point	02:01	15:54:48	35	2.2
<Drogue Chute Deploy>	02:06	15:54:53	33	1.8
Hi-Speed Tumble	*~03:23*	*~15:56:10*	*17*	*0.5*
Impact	*~06:05*	*~15:58:52*	*1.3*	*0.2*
<Main Chute Deploy>	06:20	15:53:32	7.4	0.15
<Air Snatch>	22:07	15:53:32	2.4	0.01
<Touchdown (Backup)>	26:22	15:53:32	1.3	0.01
Anomaly events in italics				

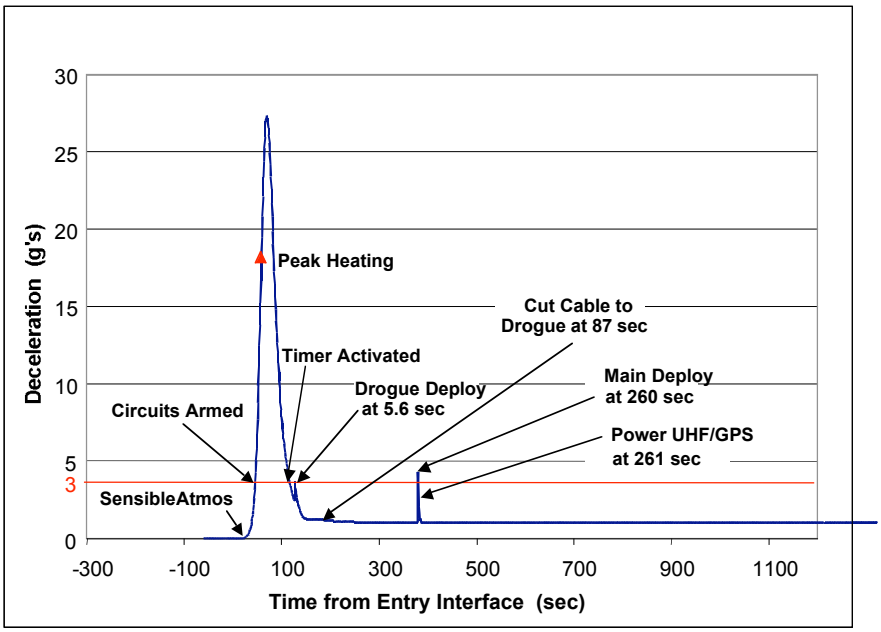

Figure 2-5. SRC deceleration profile and pyro event timeline

Avionics Events

Figure 2-6 is a block diagram illustrating the redundant SRC avionics boxes, battery power sources, EDL pyros, and C&DH subsystem. Required functions were carried out by the three circuit cards housed in the avionics boxes, each card dedicated to a separate activity (Figure 2-7). Circuit cards communicated with each other via a backplane and communicated with the spacecraft C&DH by signals passed through the front panel connectors. The main functions of the avionics units were:

- *Power (including control and power for motors, battery depassivation, and final battery operation; see Figures 2-8 and 2-9).* The Relay module was responsible for SRC power, conditioning the $LiS0_2$ battery before SRC separation, and then sending commands to switch power to SRC batteries. Note that although the G-switch sensors were located on the Relay module, their functionality was closely related to the Event Sequence Timer (EST) module. Contacts on the G-switches went directly to the backplane and were passed to pins on the EST module. An X-ray of the G-switch clearly shows the proof mass and the spring that determined the sensitivity of the switch. The direction of applied force required to close the switch is also easily discernible (Figure 2-10).
- *Event Sequence Timing for EDL events.* This function was allocated to the EST module. EST electronics were responsible for initiating the pyros at predefined times after deceleration was detected. The block diagram in Figure 2-11 shows both SRC Avionics units side by side—SRC-A on top and SRC-B on the bottom—clearly illustrating the application's redundancy. Each Avionics unit had two G-switches that fed separate low-pass filters and timer circuits on the EST module. Both G-switches had to indicate a positive detection to initiate a pyro event, a design feature that prevented premature firing of the pyros. The figure shows both timer outputs 'AND-ed' together. The 'AND' condition must be true to fire the pyros from that SRC string. This 'AND-OR' architecture is common to many spacecraft pyro designs.

The EST electronics card comprises four functional blocks: low-pass filter, counter, timer decodes for each event, and FET drivers to trigger the pyros. The G-switches each feed into low-pass filters. When a G-switch closes, the input to the low-pass filter is pulled high. The low-pass filter only allows signals through that persist for longer than ~500 ms, effectively eliminating accidental initiation of the timers due to glitching or g-switch chatter. The two low-pass filters feed into two independent timer circuits. These timers use a 10-Hz timing source to measure the passage of time (Figure 2-12). They are designed to not initiate a countdown until the g-switch indicates that it was open after having been closed for more than 500 ms. By doing this, the time for the various pyro events was tied to the falling edge of the deceleration curve illustrated in Figure 2-5. Once the counters began counting they would continue counting. The output of the counter chain went into a decode tree that was used to select the 3 times required to fire the pyros identified in Table 2-3 (see also Figure 2-12). The cross-coupling of the two timer branches precluded firing a pyro before both chains indicated the pyro should be fired.

- *Motor control logic and drivers to extend and retract the sample surfaces.* This function was allocated to the Motor Drive Electronics module and had no role in the EDL timeline.

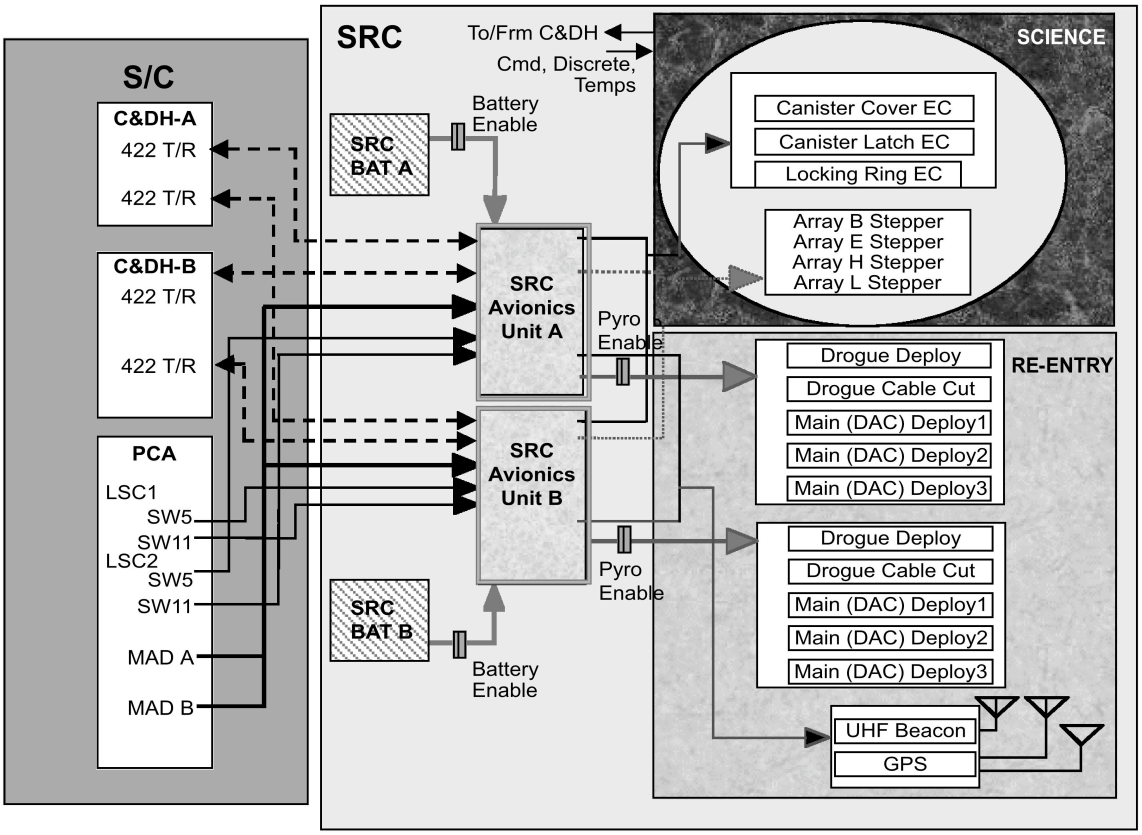

Figure 2-6. Spacecraft block diagram and Interface diagram

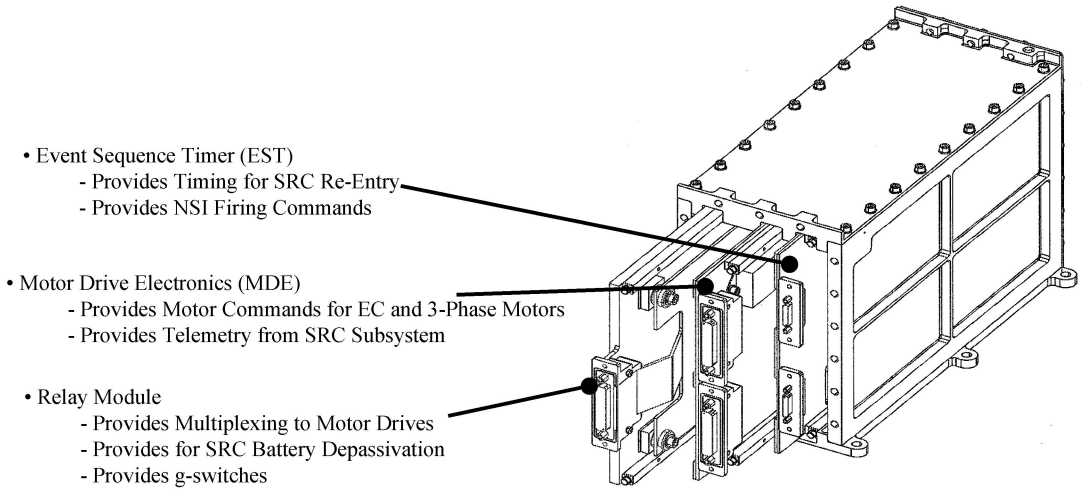

Figure 2-7. Location of circuit cards in an avionics box

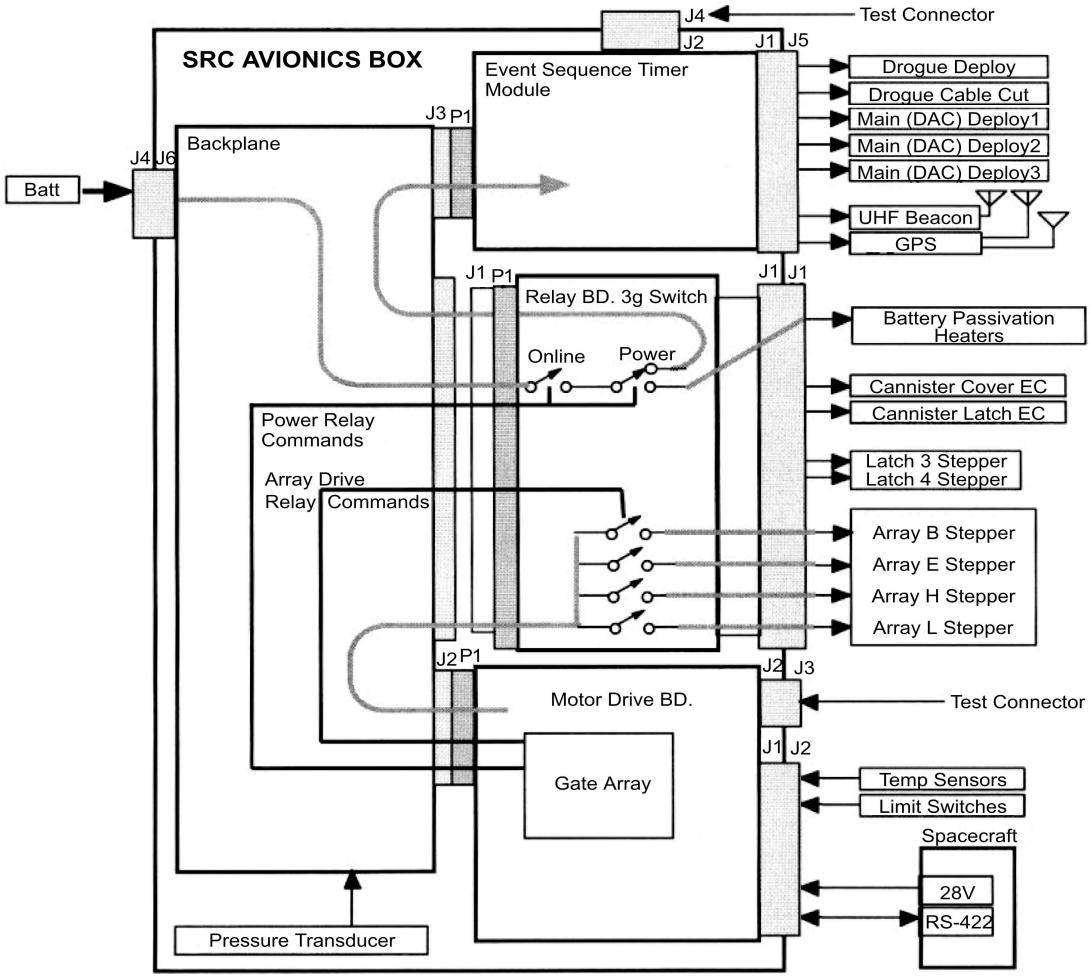

Figure 2-8. Relay module block diagram

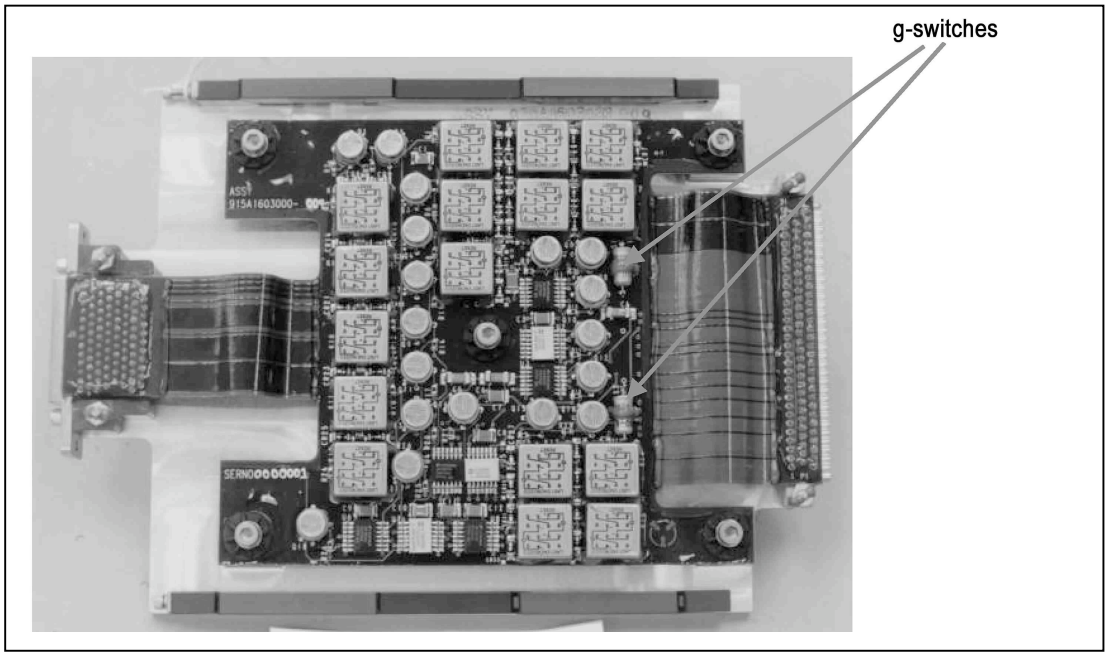

Figure 2-9. G-switch location in relay module

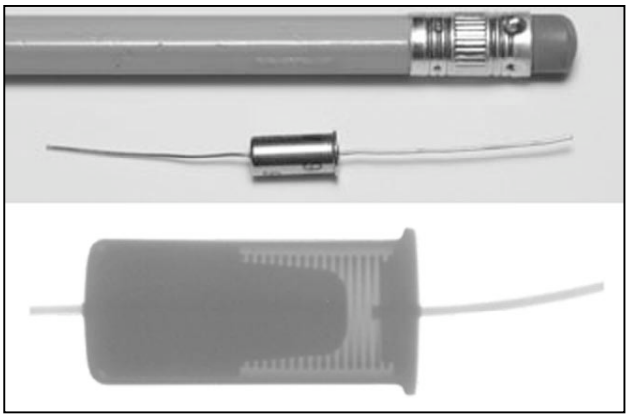

Figure 2-10. G-switch views; X-ray shows mass and spring

The Forensic Process

Shortly after the mishap, LMA engineers identified the proximate cause of the failure in less than a week. The forensic evidence indicated that the first pyro event had not occurred (i.e., the drogue chute had not deployed). The list of possible common mode failures that could affect both avionics units was small. LMA engineers quickly identified the improper orientation of the G-switch as a simple common fault in both redundant avionics units that could explain the entire failure. Examination of the as-built relay module indicated that this was indeed what had happened.

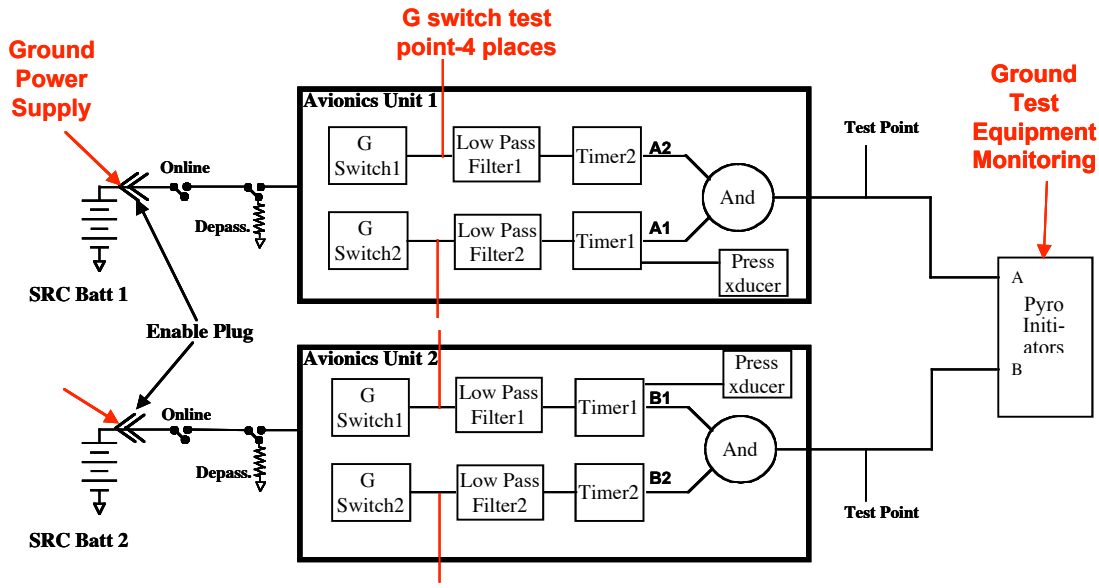

Figure 2-11. EST block diagram

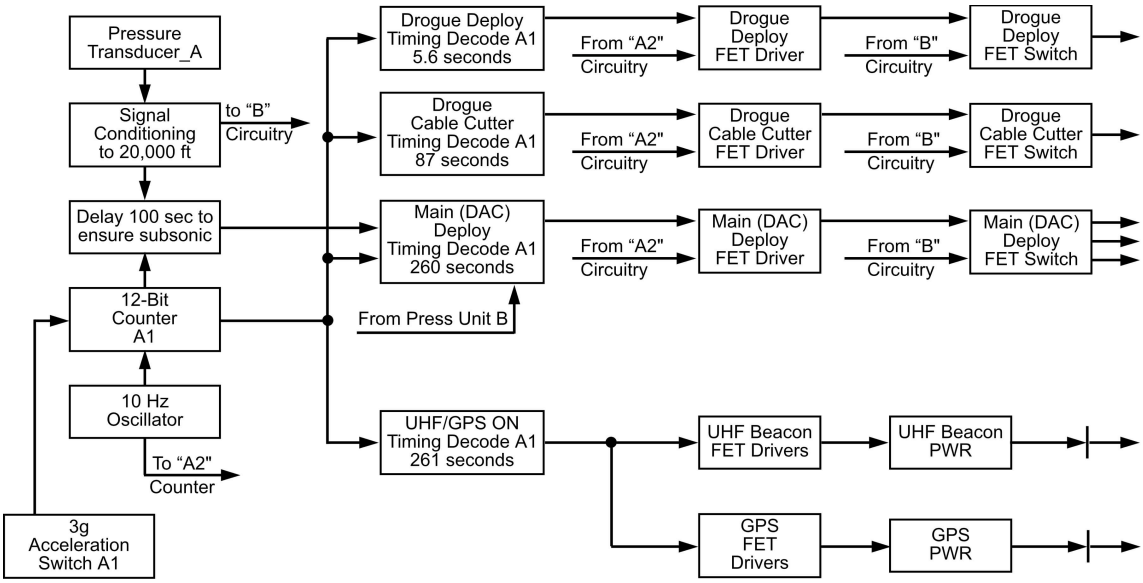

Figure 2-12. EST flow diagram

JPL and the MIB spent a significant amount of time identifying the root causes of the failure and making sure the failure analysis was comprehensive. This was accomplished by developing and refining a fault tree that could be used as a road map for exploring the complete constellation of possible failure causes, as well as offer an explanation for some of the causes. There were 35 fault tree items. Refer to Appendix A for the complete Genesis Fault Tree.

This approach was important because

- The failure cause was not unequivocally proven
- The failure cause did not rule out other contributing faults
- A similar mission with essentially the same EDL system (Stardust) is concurrently making its way back to Earth

After helping to refine the fault tree, the SRC Avionics sub-team spent most of their time focusing on branch 2.0, "Sequencer Did Not Function." This branch contained the leaf pertaining to the possible incorrect installation of the G-switches. The investigation was guided by three questions:

1. *Could we easily prove that the G-switches were improperly installed—not just from engineering drawings, but from objective evidence of the as-built unit?*

Answer: X-rays of the Engineering Design Unit clearly showed the G-switches to be installed in the opposite direction they should have been, given the expected forces on the SRC (see Figure 2-13). This was verified by a visual inspection after the surviving flight SRC unit was disassembled.

2. *Was there any reason to believe the G-switches should have been activated by SRC tumbling, even though improperly installed?* Failure to open at this juncture, assuming the design parameters indicated that this was likely, would have pointed toward another failure cause lurking behind the first obvious failure.

Answer: Using visual imagery, analysis of the forces experienced by the G-switch after the SRC started to tumble proved them to be insufficient to trigger the parachute deployment. This eliminated concern that G-switch orientation was masking a more subtle problem in the SRC.

3. *Was there any reason to believe the G-switch design would not have worked had the G-switches been properly oriented?* Some of the branches in the fault tree cast doubt on the attributes of the G-switch when it was operated in the Genesis environment (e.g., the SRC capsule was spinning and the deceleration vector was not aligned with the axis of the G-switch).

The answer to the final question was deemed unlikely. The FRB consensus was that any question in this area was really a feed-forward issue that should be answered by other missions using this same design (i.e., Stardust).

2.2.2.1 Test Findings

Avionics Unit 1 (AU1, referred to as Avionics Unit A by the MIB), located near the battery, showed minimal visible damage and was relatively intact. AU1 was disassembled, inspected, and photographed[2]. During removal of the boards, it was verified that the G-switches were indeed 180 degrees out of phase with the atmospheric acceleration force on the spacecraft. Avionics Unit 2 (AU2), located near the GPS beacon, sustained a large amount of impact damage.

[2] Testing and inspection of AU 2 was severely limited due to impact damage. It was possible to verify the Pyro Resistors on AU2; there was no indication of overstress. It was also possible to verify the timing resistors on AU2 and all were installed as expected.

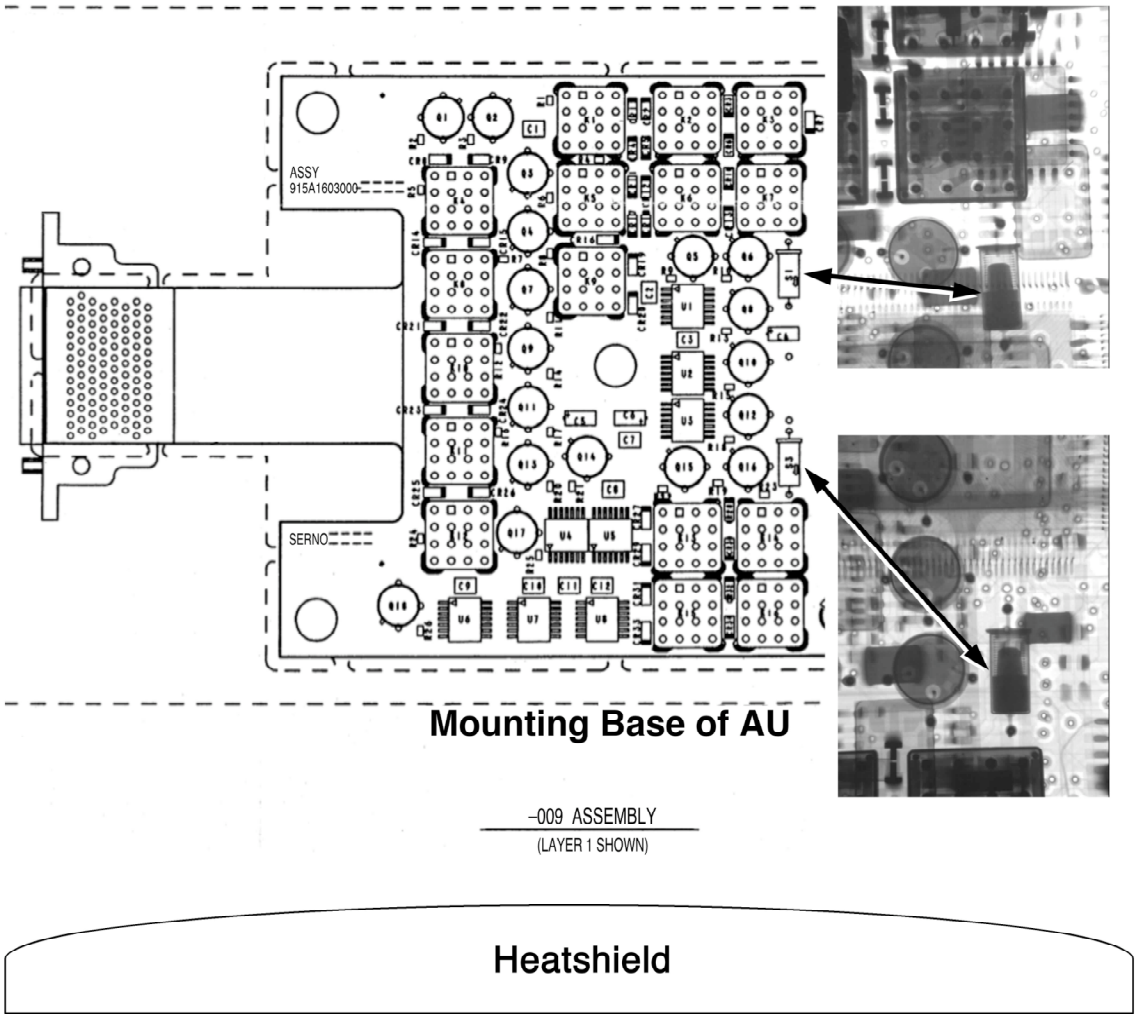

Figure 2-13. X-Ray of board indicating that installation of G-switches matches board layout drawing

Continuity Testing

Continuity tests were performed power-to-ground and power-to-power on all power and ground nets (including secondary voltage regulator outputs), as well as on the Relay and EST cards. Continuity tests were also performed pyro-to-ground and pyro-to-pyro on all the pyro outputs on the EST card. These tests found no unexpected shorts. Fuses on the EST and Motor control card were checked for continuity. There were no open fuses.

Continuity tests were performed on the power relays in an attempt to determine relay state; however, the results were ambiguous and indicative of relay damage. X-rays of the relays also proved hard to interpret, but suggested the flight relays had most likely been damaged due to impact. The LMA relay failure analyst reported that relays are fragile and dropping them even 3 to 4 feet onto a bench will damage them.

Pyro Ballast Resistors

Pyro ballast resistors were checked for physical size and ohmic value and visually inspected for signs of overstress. The 0.1% precision resistors were the correct physical size and there was no indication of overstress. Variations between measured values and specification on the order of 3% were observed; however, these variations are attributable to the measurement method. The measurements were taken by probing the resistor leads through the conformal coat using a simple 2-wire hand-held digital multimeter. This was not a precision measurement method and was not capable of resolving a 1.6 Ω resistance to within 0.1%.

Timing Resistors

Timing resistor configuration was verified visually and using a continuity meter. There was a missing resistor that resulted in an open to pin 9 of AND gate U37 on the EST Card SN 001. The missing component was in the drogue-harness-cut timing circuit B. The correct state of the input was supposed to be logic high. A logic low on the input would disable the circuit and result in loss of the drogue-harness-cut pyro fire signal from AU1.

Conformal coating could be seen over the solder pads. The missing resistor could not have been sheared off at impact without damaging the conformal coat. Inspection of "as-built" drawings confirmed the resistor was missing before launch. The relay pads were examined by LMA failure analysts to determine if the resistor had ever existed. There was evidence that a resistor had been removed from the pads.

The missing resistor was not detected in functional tests. The board passed both board-level and Assembly, Test, and Launch Operations (ATLO) functional timing tests in spite of the missing component. The impact of the missing component was a loss of redundancy for the drogue-harness-cut function due to the possibility of timer malfunction from AU1. The missing resistor would not have resulted in failure of the drogue to deploy.

Additionally, EST S/N 001 from AU1 was functionally tested post-flight (see Appendix G) to verify operation of the SRC-AU EST board. The board successfully completed two sets of pyro signal timing and output voltage tests, which included six drogue-harness-cut timing tests. The board passed all drogue-harness-cut timing tests. It is suspected that parasitic leakage may have resulted in the open input floating high (correct state).

2.2.2.2 Conclusion

The avionics inspection did not turn up any likely causes for the failure of the drogue to deploy other than the incorrect phasing of the G-switches. The successful test of EST Card SN 001 proved that the AU1 EST card was fully functional during EDL (since it's hard to imagine an impact somehow fixing a broken card). Thus, at least one avionics unit was fully functional during EDL, and, thus avionics failure could not have been a cause for failure of the drogue to deploy. The avionics unit inspection confirmed that the G-switches were phased incorrectly and would not have closed during normal EDL, thus resulting in the failure of the drogue to deploy.

2.2.3 Fault 3: Harness/Connector Failure

2.2.3.1 Thermal Protection System Inspection

One explanation for a failure in the harness/connector would be a breakdown in the Thermal Protection System (TPS). To determine the extent of TPS degradation, if any, a visual examination of the remaining TPS hardware was performed to determine if a failure of the TPS led to the malfunction of the parachute deployment system. This inspection was not intended to include any destructive tests of the materials. The JPL Failure Review Board supported the NASA Mishap Investigation Board in this effort.

Forebody Heat Shield

The forebody heat shield experiences the hottest temperatures on the spacecraft and is critical to protecting its internal components. The Genesis heat shield was made of a new material that incorporated a thin carbon–carbon composite outer shell with carbon insulation on the interior. Approximately half of the heat shield remained after impact, but a close visual examination showed no cracks, pinholes, or delamination of the carbon–carbon face sheets. As expected, the original thermal control coating was completely removed by entry heating, with only traces remaining on the curved, maximum-diameter region. Under magnification, the weave pattern of the carbon–carbon face sheet looked normal. Where visible, the internal carbon insulation was inspected and showed no sign of flow burn-through.

Three retention and release (R&R) fittings, used to mechanically connect the spacecraft bus with the SRC during flight, penetrated the heat shield. They were potential pathways of hot gas ingestion into the spacecraft. All three R&R fittings were recovered: one intact in the recovered portion of the heat shield, and two broken out of the heat shield. Downstream of the intact R&R fitting, a darkened plume region caused by the hypersonic flow passing over the hole of the R&R fitting discolored the surface of the carbon–carbon bus. This discoloration was likely due to a combination of increased heating due to turbulence and erosion deposits from the exterior molybdenum fitting. The appearance was nearly identical to thermographic paint patterns seen during Langley Research Center wind-tunnel tests, which were conducted for the original design development. The narrow shape suggests a small angle of attack of approximately 1 to 3 degrees, well within pre-entry design expectations. The hole in the carbon skin for the molybdenum fitting showed some evidence of shoulder rounding on the downstream wall, and there was some rainbow discoloration on the interior of the carbon–carbon bus. This discoloration could be due to a number of causes: normal adhesive variation, normal skin leakage transporting surface contaminants, or hot gas penetration due to partial erosion or bus separation. If a hot gas penetration condition did exist, it was so small that a full burn-through was precluded—there was no other evidence of any flow between the face sheet and boss. Thus, any such blowby, although conjectural, did not compromise the heat shield system.

The interior of the R&R fitting consists of a bolt-catcher can. There was noticeable black discoloration on the can that was thought to be a result of impact events causing electrical arcing of the Avionics Box A harness (see Appendix C).

Overall, inspection of the forebody heat shield showed no unexpected anomalies that would have compromised the integrity of the heat shield. Examination of the interior structure showed minor discoloration on some surfaces, but there was no evidence of hot gas ingestion, burn-through, or overheating. Most of the discoloration appeared to be consistent with UV exposure (the SRC was open for long periods of time during the science collection).

Temperature strips that were attached to the inner structure read between 121 and 138°C. The TPS-to-structure interface, where the adhesive was located, has a design temperature limit of 250°C. The inner structure temperature where the temperature strips were located would naturally read approximately 20°C lower than this interface.

Main Seal

The main seal between the heat shield and backshell consists of two parts—an inner low-temperature seal and outer high-temperature seal—both bonded to the heat shield side with a silicone adhesive. Both seals showed significant fraying, especially on the impact side of the capsule. Presumably this fraying was due to the impact event, as there was no sign of any heat distress, melting of the exposed fibers, or blowby patterns that would have been introduced if the frayed fibers had existed during entry. At the locations where the main seals had been pulled loose from the carbon–carbon base by impact, the underlying adhesive looked uniform and clean with no signs of burn-through or blowby.

Backshell

The backshell TPS consisted of SLA-561V, a flight-proven material with heritage extending from Viking to the Mars Exploration Rover. As was the case for the forebody TPS, approximately half of the backshell was recovered. The general surface appearance was as expected, with a smooth surface that showed no physical defects. The char band around the lower part of the backshell was fairly uniform, but was interrupted in a 4-inch-wide zone. This zone seems to have been a result of the disrupted flow over the forebody R&R penetration.

The interior of the backshell was inspected for evidence of hot gas ingestion or thermal distress. Most of the interior was still covered with the multilayer Kapton insulation blankets. These blankets and Velcro fasteners showed no sign of thermal distress. Some discoloration in areas on the structure appeared to have been from solar exposure. Overall, the interior of the backshell appeared to be in pristine condition.

There were two remaining intact vent penetrations on the backshell. One was partially crushed from impact and was contaminated with mud. Neither vent showed any sign of hot gas penetration or thermal distress. In fact, no seals in the backshell showed signs of overheating.

Temperature strips were still attached in locations on the inner structure and read between 71 and 82°C for the upper biconic region of the backshell, which is the coolest portion of the SRC. The highest reading from temperature strips located on the lower biconic region, which is the hottest region, was 105°C. The TPS-to-structure interface, where the adhesive was located, has a design temperature limit of 250°C. The inner structure temperature where the temperature strips were located would naturally read approximately 20°C lower than this interface.

2.2.3.2 Conclusion

In general, the visual inspection of the surviving TPS hardware and associated seals, vents, and penetrations showed no signs of hot gas burn-through or thermal distress. There appeared to be no anomalies of the TPS that compromised its integrity or performance. Preliminary temperature strip readings showed temperatures that were within design specifications. The post-entry surface characteristics of the forebody and aftbody TPS leads to the conclusion that the entry was nominal and that SRC tumbling did not occur during atmospheric entry. In conclusion, there was no evidence of TPS failure. Inspection of the harness showed the cable was intact during re-entry. Thus, the harness/connector failure was closed as unlikely.

The participating NTSB member performed an analysis on a portion of the SRC harness that appeared to be shorted/charred. After careful analysis, it was determined that the cable shorted in an oxygen atmosphere. This means that the cable could not have shorted prior to the pyrotechnics command for chute deploy; the short most likely occurred upon Earth impact.

2.2.4 Fault 4: Drogue System Failure

Inspection of the drogue chute system showed that the main mortar, as well as the pyrotechnics needed to fire it, were intact. Because the drogue chute deploy system was never initiated, this fault was deemed unlikely.

Consideration

A careful examination and evaluation of the Genesis parachute for long-duration exposure effects would be a prudent action for the Stardust mission.

2.3 DISCUSSION, FINDINGS, AND RECOMMENDATIONS

The findings and recommendations from the Genesis Mishap Investigation Board are presented to enhance the safety and success of future missions. As will become evident, Genesis had a number of issues—all interrelated, all leading to the mishap. First and foremost was the failure of project management to set up systems engineering processes to perform the oversight and insight functions, including verification, required to manage the job. In order to put this discussion in context, however, it may be helpful to review key issues of critical importance to the project.

2.3.1 Discussion

The mission evolved in a climate of strict tight schedules and fiscal margins (see Appendix D). In order to meet the cost cap, a high-heritage design was proposed based upon the Stardust Sample Return Capsule and spacecraft bus. However, heritage hardware and software proved inadequate for Genesis, leading to deviations from the baseline mission design and jeopardizing Level I requirements.

Background

In preparation for the Preliminary Design Review, the project organized a peer tabletop review on the SRC (including the SRC-AU). The SRC-AU functionality had grown beyond that of the Stardust design. Additional relays were required, as well as a new motor control board to drive the collection

arrays and contamination lid, driving the SRC-AU to exceed its volume and center of gravity (CG) constraints. This made it necessary to split the SRC-AU into two units. The SRC-AU was also placed normal to the heat shield to meet CG requirements (Stardust's unit was horizontal, flush with the heat shield.)

Concurrently, the primary designer for the SRC-AU left Genesis and a new Project Integrity Engineer (PIE) was assigned. The new PIE faced a number of pressing issues: the Motor Control Board (MCB) functionality did not fit within the allocation; the FPGA was 120% oversubscribed; it was unclear that the relays could be laid out; and the Event Sequence Timer (EST) board was under layout constraints. The primary concern was the MCB board FPGA, because if it could not be made to fit within the allocation or functionally meet its requirements, then Genesis Level I requirements were in jeopardy.

Several changes to the G-switches occurred during this time as well: the G-switch orientation was altered from normal to the Printed Circuit Board (PCB) to horizontal with the PCB; location was switched from the EST board to the relay board; and signals were routed through the backplane. These modifications were handled by the LMA design shop and contracted out for job shop work. The modifications underwent a peer tabletop review and were presented at the Critical Design Review (CDR). During CDR, it was stated that the SRC-AU would go through a centrifuge test to verify its functionality during descent.

Consequences

Design issues had a significant impact on the project schedule, leading to cutbacks of critical testing, oversight, and independent verification. Multiple changes and design issues caused delivery of the SRC-AU to ATLO to slip by 4 months. Because the delivery was late, it was decided to drop the centrifuge test in favor of verification by analysis and inspection. No documented system engineering oversight was performed; neither was there concurrence on this decision. After temperature testing the SRC-AU as part of the testing regimen for ATLO delivery, the PIE decided a continuity test was needed. The PIE, along with LMA Mission Assurance, developed a "quick-lift" test to verify that the G-switches made contact and that all cabling and backplane signals were contiguous. This test was not intended to be a performance test that verified G-switch orientation. Thus, the SRC-AU was delivered to ATLO without a complete performance test, without independent verification by analysis/inspection that the G-switches met the implementation requirements, and without lessons learned from Stardust integration and testing.

Other factors

Concurrent with these events, the second of the Mars failures occurred. In December 1999, JPL's Systems Management Office, under direction from NASA and JPL senior management, set up a red team to review the readiness of Genesis for launch. The red team chair developed a detailed plan and objectives that were reviewed and approved by JPL senior management. Eleven sub-teams were formed that spent 2 days reviewing material, 1 to 1-1/2 days with their counterparts on Genesis (Telecom, C&DH, Electrical Power Subsystem, Thermal, etc.), and 1 day preparing a report that was briefed to the red team lead and the other sub-team leads. These inputs were then assimilated into one report that was briefed to the Genesis project and JPL management. After the initial release of

findings, an EDL sub-team review was held. This review was performed quickly and late in the review cycle, focusing mainly on aerodynamic issues, and uncovered no substantive findings.

The Genesis project at this time was responding to the Mars Failure Board recommendations, the red team findings, and a slip in launch date. The project received $17M additional dollars to respond to these findings and the launch slip caused by conflicts with Mars Odyssey.

2.3.2 Findings

These are the root and proximate causes of the mishap, as identified by the MIB and FRB. Specific recommendations and contributing factors are included in the following sections.

- Systems Engineering
- Project Management
- Heritage
- Test As You Fly
- Red Team Reviews

2.3.2.1 Systems Engineering (Checks and Balances)

Background

The core of program management successes are due to the formal systems engineering checks and balance processes, usually managed under the functional lead of systems engineering and a chief engineer. During development, the JPL Genesis project established a project management concept that was missing penetrating systems engineering checks and balance systems. JPL was responsible for the requirements and LMA was responsible for the flowdown of the requirements and the development, design, and test of the hardware/software to verify requirements. There were no formal JPL Responsibility, Accountability, and Authority (RAA) process controls over LMA. The following traditional systems engineering checks and balances were missing, understaffed, or improperly applied:

- **Oversight/Insight.** Inadequate numbers of systems engineers were assigned to both JPL and LMA project management teams. JPL systems engineers were not given penetrating oversight into LMA or accountability for any hardware, systems, or subsystems. Concerns expressed by JPL systems engineers, especially those regarding inadequate oversight and testing, were not dispositioned. The JPL Development Project Manager did not implement a penetrating systems engineering process and chose not to assign individual JPL responsibility, accountability, or authority to subsystem hardware, software, or documentation efforts.
- **Verification Matrix.** A key systems engineering responsibility is ensuring that the Test Verification Matrix verifies the requirements. The high-level requirements were developed by JPL. LMA developed the flowdown to subsystem requirements and the Test Verification Matrix for the flight system. However, JPL or LMA systems engineers never (either independently or together) verified that the tests (either designed or implemented) verified the requirements. In addition, there was no JPL independent assessment or data review of the close-out of verification items.

- **Phasing Tests.** Due to limited systems engineering support, the Phase Test Plan was not reviewed for completeness. The plan included standard attitude control functions, but not unique non-attitude control functions (like the gravity switch). Also, because the G-switch was part of the SRC-AU and not part of the attitude control functionality, this oversight was not caught. The deletion of the centrifuge test was not recognized as a phasing verification test, but as a design performance issue.
- **Data Review/Change Control.** In the absence of formal requirements to approve LMA documentation (e.g., test plans, changes to documentation, material substitutions, supplier's material/test changes), JPL checks and balances did not occur. For example, while JPL could participate in LMA design and documentation reviews, JPL did not have a veto right or the ability to direct LMA on what types of changes were required to be presented at a Change Control Board. The decision to delete the centrifuge test was made at a local level—JPL systems engineering or project teams had no apparent knowledge of it. This is a clear indication of pushing the decision as low into the organization as possible, but without the oversight to verify the rationale of the change. Mandating change control for mission-critical events might have been a fail-safe process to catch the test deletion.

  JPL's specific knowledge of an issue came via LMA at weekly meetings. Problems were tracked and managed separately at JPL and LMA. LMA used a fairly standard aerospace risk management approach, which combined issues, problems, and risks. LMA provided this monthly to JPL, which then sorted LMA's input into two categories—problems and risks. These risks or problems were statused separately in monthly reviews.

Recommendations

R1 **Ensure that JPL is involved in all program and system verification changes**. Individual verification of all changes to plans, designs, tests, material substitutions, or implementation processes is critical to ensure systems performance is not jeopardized.

R2 **Assign JPL mission phase system engineers for critical mission events**. Such critical events as launch, orbit insertions, aerobraking, and EDL should have mission mode system engineers. Their primary role is to ensure that crosscutting functions are verified. They should be boundary and subsystem independent, following the design to its conclusion. The system engineer should reside at the appropriate location in the system engineering team to facilitate and resolve crosscutting issues.

R3 **Develop an incompressible test list and monitor it for completeness**. Upon completion of the development activity, the systems engineering team should determine which of those items in the verifications matrix must be completed by test. This list could be refined to include only those critical crosscutting systems tests that demonstrate robustness of the system as a whole. Examples of such tests are phasing, reboot, and safe hold.

R4 **Use a common risk management system across the project**. Common definitions for risk, problems, and issues must be agreed on early and placed in the Risk Management Plan. A clear reporting process from a contractor up through JPL should be defined and documented in the Risk Management Plan.

2.3.2.2 Project Management

Both JPL and LMA project management had deficiencies. This section describes the key deficiencies of each.

JPL Project Management Background

The JPL Development Project Manager delegated the actual building and testing of the hardware and software to LMA without identifying and agreeing on systems engineering checks and balances processes. The JPL Program Manager did develop and document the requirements through the systems engineering team, but did not develop or approve how the requirements were to be verified. Basically, JPL's responsibility ended at Level II requirements, and LMA managed the hardware/software development build and test without JPL formal oversight or approval. The Verification Matrix was never formally approved by JPL; nor were LMA test plans approved by JPL. The JPL project office was too small and the systems engineering function understaffed, which limited its ability to provide oversight on LMA.

Observation

The JPL Development Project Manager's approach to managing the Genesis project failed to put in place a checks and balances process to verify the hardware and software met the system-level requirements.

Recommendation

R5 **Require JPL project managers to institute a formal systems engineering checks and balances process with individual responsibility, accountability, and authority for systems and subsystems**. This implies that systems engineers must be cognizant of requirements, implementation plans, and *all* changes.

Establish a reasonably-sized systems engineering team with the responsibility to probe, audit, and verify completion of verification items. Reduce the multitasking of systems engineers and allow time for them to perform the above functions. Ensure the team has time to probe key verification items and ensure the tests verify the requirements and the close-out paper supports its verification.

LMA Project Management Background

The LMA Project Manager was "empowered" by the JPL Development Project Manager to accomplish the design, build, and testing of the hardware and software in accordance with the Verification Matrix of the requirements document. There was no formal review and approval requiring JPL sign-off of LMA activities. The LMA Development Project Manager chaired a weekly telecom and a monthly meeting to review program status. As LMA chaired these meetings, the issues and problems raised and discussed were heavily driven by LMA. JPL had one person in residence at LMA; other JPL project personnel traveled to LMA either to assist in issue and problem reduction or to witness the development testing of a subsystem. LMA also was driven by profit and loss (P&L). Under the Discovery program, funding is identified with risk funds. However, the belief was that the program would be terminated if it exceeded the cost cap. The design and development issues common to all projects surfaced and began to significantly reduce LMA's profit position on Genesis.

The LMA Development Project Manager reduced staff, eliminated reviews, and increased the number of roles of his systems personnel by calling them both design engineers and systems engineers. Eventually, the LMA Development Project Manager even convinced LMA management to forego fee in order to keep costs within bounds. While specific documentation does not exist, circumstantial evidence suggests that the decision to not conduct a centrifuge test on the G-switches was driven primarily by schedule and ultimately by cost.

Observation

LMA's Genesis program performance was "best effort" within a P&L cost constraint. LMA was not provided any detailed JPL oversight. LMA's own systems engineering support was weak, due to task multiplexing. This was justified under the belief that heritage hardware requires minimum oversight. The JPL Development Project Manager's managerial style was one of total empowerment to LMA, with no penetrating systems engineering oversight checks and balances processes established. LMA's reaction to cost growth, by reducing personnel, testing, etc., contributed to the Genesis failure.

Recommendation

R6 **Change the fee structure for a P&L contractor to a fixed fee of 4% to 6%, with an award fee of 9% to 11%, based principally on cost and program management performance**. The intent of this award fee concept is to provide an environment to reward a P&L contractor for management of program costs and for overall management of the project itself. On-orbit performance award fees are too late in the project life cycle to have an impact during development. In addition, JPL should not attempt to restructure the contract of a contractor, who has performed well on cost containment, to pay for poor cost performance in other areas, including JPL.

2.3.2.3 HERITAGE

Background

The FBC concept stressed the use of heritage hardware and software as part of NASA's program selection criteria. Unfortunately, heritage hardware and software is almost never implemented as previously flown or certified. In Genesis, the G-switch was stated to be Stardust heritage hardware. The Stardust G-switch circuit design may have been the same for Genesis, but there were a number of circuit card and layout changes, e.g., the Stardust G-switch circuitry is on two cards and in one box—in Genesis, this same functional design requires three cards and two boxes in addition to control functions not on Stardust. These extensive changes destroyed any similarity to Stardust heritage except in a very minor sense. This departure from the "build to print" concept should have required a more thorough review and test program. However, heritage was assumed to indicate minimum risk and thus not in need of as detailed insight or oversight by JPL and LMA systems engineering.

Observation

The term heritage should be viewed as an alarm—a warning signal—requiring a special look. JPL and LMA senior project managers and systems engineers did not require centrifuge testing for the Genesis hardware changes from the Stardust G-switch hardware, deciding instead that analysis was

adequate verification that the G-switch met the requirements. In actuality, the Genesis boxes containing the G-switches were far from heritage. Furthermore, G-switch verification testing should have been done in a centrifuge as part of an incompressible test list, and not by analysis.

Recommendation

R7 **Ensure that heritage hardware goes through the same strenuous verification and review process as new designs.** While the nonrecurring costs will be lower, the testing program should not have less veracity. Additionally, all heritage items, as well as any changes from heritage designs, should be highlighted and briefed at major project reviews. If verification by analysis or similarity is accepted, then an independent certification should be used to assert the completeness of the verification.

2.3.2.4 Test As You Fly

Background

Originally, a centrifuge test was planned in order to verify the functionality and performance of the G-switch. The CDR package for the SRC-AU discusses the test and even shows time set aside to perform such a test. As has been noted before, this test was deleted and never indicated as a Test As You Fly exception. Genesis red team and other reviews held after the Mars 98 recommendations did not recognize that this was a Test As You Fly exception.

Observation

The primary focus for a list of Test As You Fly exceptions is to inform management of the risks at launch. It can be used to facilitate a risk discussion and is not a vehicle to punish the project for not performing such tests. However, if launch readiness reviews are the first opportunity to see and discuss the exceptions, the value as a communication tool is minimal. There is no time to evaluate other options that might allow the test to be performed.

Recommendation

R8 **Develop a comprehensive Test As You Fly exceptions list and present it at each major review**. The exceptions list should be presented at the CDR in draft form and continually updated through to launch.

2.3.2.5 Red Team Reviews

Background

As a response to the Mars 98 failures, a special review team was called in to evaluate Genesis. This activity came to be known as the Red Team Review. This was the first time the red team concept was ever employed. The Mars 98 failures occurred late in the Genesis development cycle. Much of the Genesis hardware was built, and the project was well into its integration and test schedule.

While the original red team charter did have an agenda item to review and verify that the Test Verification Matrix would meet the requirements, this portion of the review objectives was not met. The review team consisted of outsiders not familiar with the Genesis program. They were briefed on the program and then briefed on the area they were to review, including meeting with the JPL and

LMA Genesis systems engineers. The team reviewed this material for about two days, then met and briefed their findings to the project and red team lead. Due to the fast pace of the review, many red team members did not have the time to probe deeply enough to ascertain the veracity of the verification process. There was also lack of engagement on the part of a key team member. In addition, leaders did not feel they had the authority to demand delta reviews when certain areas were not prepared during the three days of reviews.

Observation

The JPL red team process on Genesis failed to provide a critical independent assessment or increase the probability of project success. The team's members were not best suited to their roles, and the review's duration was too short. As a result, the scope of the review was limited to what JPL and LMA project members wanted the red team to discuss.

Recommendations

R9 **Hold a project Independent Readiness Review, headed by the systems engineering team members assigned to the project team and augmented by a systems engineering/chief engineering staff assigned to a core organization (in this case JPL)**. First, the project systems engineers know their project (no learning curve); their reviews will have depth because they know the systems/subsystems (augment as required) and second, they have the time to conduct the review. JPL can augment systems engineering and/or chief engineering personnel with specific technical expertise. The key to this conceptual change to the traditional red team approach is to use the project's own systems engineering personnel who start the independent assessment by tracing and confirming that the requirements will be verified by the Test Verification Matrix, then tracking the test plan to ensure the test plans match the Test Verification Matrix. The independent assessment also reviews all controlled changes to hardware and documentation to certify that the pedigree of the test is still valid and then verifies that the test setup is correct. There are many possible variations to this process, but the concept is to maintain a strong, independent, systems engineering staff within a project team that is also charged with accomplishing its own Independent Readiness Review (with selected augmentation for specific technical disciplines as needed).

2.3.3 Other Considerations

The following items were informally discussed by various FRB members. The items listed do not represent the opinion of the board, but are listed as "think abouts."

Faster, Better, Cheaper

Genesis was a project initiated and developed during the heights of faster, better, cheaper. Many of the shortcomings of this implementation strategy have been stated in a number of documents, such as *Report on the Loss of the Mars Polar Lander and Deep Space 2 Missions* (JPL D-18709). This report will not reiterate those here but simply state that the FBC implementation approach was a contributing factor to the failure.

EDL Telemetry

Genesis did not have any system of re-entry telemetry. Projects should continue to consider real-time engineering telemetry during key critical events.

Engineering Data Storage (Black Box)

Genesis did not have any system for tracking its health or performance during re-entry. There was no requirement for a black box similar to that required on commercial airlines. Given the simplicity of the Genesis EDL system, this idea is probably not cost effective. However, where possible, simple data storage implementations can provide critical engineering understanding for real life applications.

Lack of Functional Redundancy in the Design

The Genesis design provided block redundancy but no real functional redundancy. This class of designs is known to be vulnerable to design flaws that manifest themselves as common mode failure mechanisms. These flaws are usually mitigated by a thorough test program. Although Genesis may have benefited from some form of functional redundancy, the added cost may have been greater than the delta required to properly test the baseline block redundant system. Adding the centrifuge test to an incompressible test list would have verified the availability of the SRC-AU redundant design.

Quality Control at LMA

Forensics on the returned Genesis SRC avionics units revealed that they were not identical. One of the units had a missing resistor in the timing chain that determined when the drogue parachute cable cut would occur. SRC pre-launch testing did not reveal a problem in the logic. Subsequent testing of the recovered EST module also indicates the circuit operates as desired. However, this seems to be a fortuitous design.

Engineering Configuration Control

Review of the engineering documentation during the forensic investigation uncovered instances where the as-built design did not match the engineering documentation. This is troubling, given how important configuration management is in the engineering process. The discrepancies seem indicative of the rushed nature of the work. This goes back to the whole problem of schedule pressures.

In addition, documentation for the Stardust G-switch board layout did not specify the orientation of the G-switch. It needed to be perpendicular to the platform plane in descent to sense deceleration. In Genesis, the circuit board design engineer simply did a cut-and-paste of the Stardust circuit design layout. Without a footnote on the Stardust drawing to explain the correct orientation of the G-switch, there was no better than a 50/50 chance that the G-switch would be installed with the correct orientation.

3. CONTINGENCY PLANNING AND GROUND SAFETY INVESTIGATION

The JPL Failure Review Board (FRB) was asked to investigate the contingency planning and systems safety employed during the Genesis mishap. The Sample Recovery Phase (Figure 3-1) of the Genesis mission extended from Earth targeting to delivery of the payload canister to NASA's Johnson Space Center (JSC) Astromaterial Curatorial Facility in Houston, Texas. Of greatest interest to investigators was the segment of the phase containing the mishap, starting with pre-impact ground recovery and staging operations to Mid-Air Recovery (MAR), and ending with delivery of spacecraft debris to Michael Army Air Field (MAAF) Avery Area, Building 1012. An assessment of this period could lead to vital improvements in contingency planning and personnel safety for future missions. The descriptions of nominal and contingency sample recovery procedures in Sections 3.1 and 3.2, respectively, provide a frame of reference for this assessment. A detailed timeline of actual events is provided in Appendix E.

3.1 NOMINAL MISSION PLAN

The mission plan called for three helicopters to accomplish MAR operations: two recovery aircraft with identical flight and crew configurations, call signs Vertigo and South Coast; and one command aircraft, call sign Oscar (Table 3-1). Vertigo had the primary responsibility for MAR, and South Coast was its backup. Oscar carried the DoD Utah Training Test Range (UTTR) On-Scene Commander and Explosive Ordnance Disposal (EOD) personnel. EOD workers were there to safe any unexploded ordnance debris at the landing site (unexploded ordnance sources included the SRC and any residual unexploded ordnance from non-NASA UTTR activities). Oscar's main role was to supervise the overall proceedings and suggest a suitable landing site. A fourth aircraft, call sign Chase, carried the NASA media crew. All helicopter recovery aircraft were launched from Michael Army Air Field.

3.1.1 SUCCESSFUL MID-AIR RECOVERY

Upon successful MAR, South Coast would immediately descend and prepare the approved landing site. Vertigo, with the parafoil in tow, would then land. Once the SRC was on the ground, an SO_2 sniff test was to be performed by the trained payload commander, equipped with half-mask respirator with acid gas cartridges, and wearing an SO_2 monitor. With SRC vents covered, the parafoil would be removed and the load line attached directly to the SRC. Free of the drag of the parafoil, the SRC could be flown at higher speed. Once in the entry area of MAAR, Building 1012, the SRC's vent covers would be removed and its interior gas volume checked for HCN, CO, and SO_2. The latches attaching the backshell and heat shield would be sawed open (to permit manual lifting of the backshell), and gas levels would be checked a second time. If toxic gases were detected, LMA and JSC personnel wearing Self-Contained Breathing Apparatus (SCBA) would open the backshell and establish a nitrogen purge. At that point, the capsule was to be left in a quiescent state overnight to allow gases to stabilize before canister removal and packing for shipment. Delivery of the SRC sample canister to NASA JSC was expected to take place approximately 4 days after ground recovery.

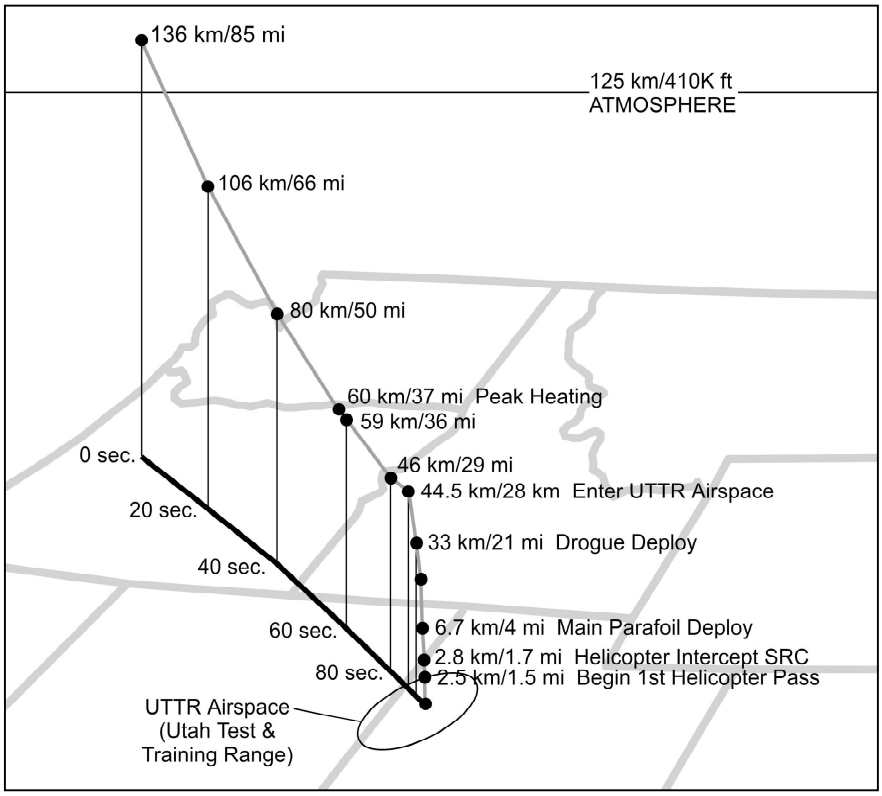

Figure 3-1. Nominal atmospheric trajectory

Table 3-1. Recovery Aircraft Plan

Aircraft	Role	Personnel	Actions
Vertigo	Primary recovery	Pilot, director of flight operations, payload master	Perform mid-air recovery of SRC
South Coast	Backup recovery	Identical to Vertigo	Ensure safe mid-air recovery
Oscar	Supervisory and authority	Pilot, DoD on-scene commander, NASA recovery team lead, EOD personnel	Take station position on Vertigo, remain clear of MAR; advise on landing site suitability
Chase	Observer and recorder	NASA media crew	Observe and record proceedings

3.2 CONTINGENCY PLAN: SRC GROUND IMPACT

Two possible scenarios were developed to address SRC ground impact:

- Failed MAR (low ground approach velocity due to parafoil-assisted descent)
- Failed parachute (high ground approach velocity due to uncontrolled descent)

For both scenarios, the overall approach was the same: recovery aircraft locate the SRC and assess the extent of damage. If damage was minimal, then Oscar would carry the SRC to MAAF in a cargo net. If damage was extensive, then the site would be secured until NASA payload and curation teams

arrived. The UTTR On-Scene Commander mandated the presence of the Genesis recovery team lead (RTL) in Oscar to assist in assessment of damage to the SRC and onboard ordnance, as a late addition during the last practice MAR prior to the actual event.

3.2.1 Contingency Plan Implementation

SRC impact occurred at 9:58:52 (all times are MDT). Impact location was 40 degrees 7 minutes 40 seconds latitude by 113 degrees 30 minutes 29 seconds longitude. The helicopter recovery aircraft were vectored to the impact site, where they arrived at approximately 10:05 a.m.[1] and circled for a few minutes, photo-documenting the site and communicating with mission control. The Vertigo Director of Flight Operations (DFO) requested that Oscar land first to assess the ground conditions. Since it had rained recently, the DFO wanted to confirm that Vertigo and South Coast would be able to take off without picking up excessive mud. Oscar performed a "touch and go mud sink" test at about 10:13 a.m.; Oscar, Vertigo, and South Coast landed at 10:14 a.m..

At 10:18 a.m., the RTL assessed the status of the SRC explosive ordnance and informed the On-Scene Commander that the ordnance had not fired—it was still live. The RTL was wearing an operating SO_2 monitor, but no personal protective respiratory equipment. The DFO arrived and was briefed by the RTL on the condition of the SRC. The DFO then gave predetermined hand signals to the Vertigo Payload Master (PM) to put on personal protective equipment and proceed to check the impact site for SO_2 from all sides, which he did. The ToxiVision SO_2 monitor, which was set to sound an alarm at a permissible exposure limit (PEL) of 2 ppm and a short term exposure limit (STEL) of 5 ppm, did not go off. The RTL inspected the SRC more closely at 10:22 a.m. and determined that the canister structure had been breached. This meant that recovery by helicopter and cargo net was not an option. This information was radioed back to the recovery teams at the MAAF 1012 facility who were preparing for contingency recovery. At around 10:25 a.m., one of the Vertigo or South Coast crew personnel walked across the SRC personnel exclusion zone twice (i.e., the personnel off limits zone defined by the line of fire of the SRC mortar ordnance). The DFO saw the first incursion into the zone and shouted instructions to exit, at which time the individual re-entered the zone to cross back to safety.

A recovery Ground Support Team (GST1) was staged with trucks and rugged terrain vehicles just outside the landing footprint. After impact, GST1 drove to near the landing site, and recovery personnel walked to the impact site, with some arriving at 10:31 a.m. and others at 10:38 a.m. At approximately 10:34 a.m. MDT, the LMA Parachute-Certified Product Engineer (PCPE) who arrived with GST1 was carrying an SO_2 monitor and proceeded to place the monitor on the ground adjacent to the SRC on the upwind side. The SO_2 monitor (BW Gas Alert brand) used by the LMA PCPE was set to sound an alarm at a STEL of 5 ppm. The LMA PCPE was not wearing respiratory protective equipment during this operation. At about 10:35 a.m., the LMA PCPE moved the SO_2 monitor from the upwind side to a location on the ground adjacent to the downwind side of the SRC. About 3 seconds later, the LMA PCPE heard the SO_2 alarm go off, quickly walked away from the impact site, and advised other personnel to stay clear of the SRC. The SO_2 alarm indicated that

[1] Times were derived from video data sources and should be considered approximate. For purposes of this assessment, the *sequence* of events is of more importance than the exact time of the events.

the SRC battery had vented. JPL Environmental, Health and Safety Office personnel arrived with GST1 at 10:38 a.m. and, upon being briefed about the unexploded ordnance and SO_2 alarm, called for all personnel to back away approximately 200 feet and move to the upwind side of the SRC impact site.

Oscar departed the landing site at approximately 10:37 a.m. to ferry the recovery team from the MAAF 1012 facility to the SRC impact site. Contingency Recovery Team A (RT-A) left the MAAF 1012 facility at 10:37 a.m. for the Avery hangar to ride Oscar to the SRC impact site. Recovery Team B (RT-B) left the MAAF 1012 facility in ground vehicles at 10:45 a.m.

GST1 departed the SRC impact site at about 10:55 a.m. in response to direction from Genesis project management to return to MAAF for a contingency procedures review meeting. GST1 intercepted RT-B on the road at approximately 11:15 a.m. and informed them that they were all directed to review contingency procedures with Genesis project management personnel. RT-A was informed of the meeting before they lifted off and subsequently deplaned from Oscar and joined the meeting, which started at approximately 11:00 a.m. All recovery personnel described the contingency procedures they were following to the satisfaction of Genesis project management, and the meeting was completed at approximately 11:50 a.m., just as the GST1 and RT-B personnel arrived.

RT-A and RT-B then proceeded to the landing site. The first priority was personnel safety (i.e., safe the unexploded ordnance) and then to recover as much science as possible. All operations from this point forward were performed using the contingency section of LMA Procedure GN 1R11, *Genesis SRC Ground Operations for Solar Wind Recovery*, as the work-authorizing document. Procedural steps were written out in the field and then concurred with by LMA and JSC curation team personnel before implementation. Since the procedural steps were being written in real time, they were treated as amendments, or flags, to GN 1R11. At approximately 12:53 p.m., the LMA Systems Safety Engineer swept the SRC area with an SO_2 monitor. No respiratory protective equipment was used by recovery personnel from this point forward. The unexploded ordnance was safed at approximately 1:36pm by LMA personnel and the SRC battery was disconnected after separating from the heat shield at approximately 3:00 p.m. An initial check of the SRC battery indicated approximately 3 volts, open circuit.

The payload canister was rolled onto a tarp to capture any collector wafer pieces (the bottom of the canister had separated). Wafer pieces were also collected throughout the impact site. The payload canister was loaded into Oscar and arrived at the MAAF Avery hangar area at 6:25pm. It was loaded into the heat shield transport cradle and moved into the MAAF 1012 facility by forklift. The remaining SRC debris (heat shield, backshell, and miscellaneous pieces of the SRC) arrived by ground vehicle at the MAAF 1012 facility at 6:40 p.m. Another SRC battery voltage measurement was taken at 7:00 p.m.

On Friday, September 10, 2004, the Genesis MIB Chair arrived on scene at UTTR and all subsequent procedural flags (2 through 11) were coordinated with and approved by the MIB Chair. All subsequent activities with the SRC hardware were implemented under the direction and control of the MIB.

3.3 METHOD OF INVESTIGATION

JPL formed the FRB safety and communication sub-team, which worked closely with the NASA MIB. FRB safety and communication sub-team members were placed on MIB sub-teams to enhance their efficiency and technical expertise. The mishap investigation was performed in two phases:

- Phase 1: Review hazard analysis documentation for adequacy (recovery, contingency, and ground operations).
- Phase 2: Compare documentation with actual observed decisions and actions.[2]

Particular focus was applied to the following areas of assessment:

- Personnel exposure to hazardous materials.
- Human factors, team effectiveness, and communication (including chain of command protocol and associated communication).

3.3.1 Observations

Assessment of hazard documentation and hard evidence led the Genesis evaluation boards to significant observations in two areas: preparation and operations.

3.3.1.1 Preparation

- **Hazardous material and personal protective equipment (PPE) requirements were inconsistently deployed throughout the Genesis project documentation tree**. Analysis of JPL, LMA, and LMA subcontractor documentation revealed inconsistencies in both hazardous material and PPE requirements (Table 3-2). Paragraph 3.2 of the LMA document *Sample Return Capsule Recovery Operations Plan, Rev. A* (GN-65100-100), does not match the requirements in the JPL documents for nominal landing operations. Also, PPE and/or hazard identification and control is not addressed for the "no MAR contingency" scenario in any of the documents listed in the table.
- **"No MAR Contingency" requirements in six Genesis documents were inconsistent**. Analysis of JPL, LMA, LMA subcontractor, and UTTR documentation revealed inconsistent levels of detail associated with the "no MAR contingency" scenario (see Appendix F).
- **Contingency requirements did not adequately address hazardous material control processes**. Although a wind sock was installed at the SRC impact site, doing so was not planned for. One of the recovery personnel had previously worked at a petroleum facility and had taken the initiative to ensure that a wind sock was installed (the payload grounding rod was used as a stake and a pink plastic streamer was used as the flag; refer to interviews with recovery personnel). Since SO_2 is gaseous, using a wind sock to ensure personnel stay upwind of the impact site is crucial. Use of wind socks in airborne hazardous material control situations is an emergency response industry standard. Nonetheless, detailed live ordnance contingency planning requirements could not be found within the Genesis project documentation tree.

[2] Observed decisions and actions were evaluated using video data, audio data, photographic data, and personnel statements. Privileged interviews were offered to JPL and LMA employees; however, all interviewees requested non-privileged status (Note: DoD UTTR personnel interviews were privileged).

Table 3-2. Hazardous Materials and Personal Protective Equipment Requirements

Document	Org.	Nominal Recovery Operations, Landing	Nominal Ground Operations, MAAF 1012 Facility	No MAR Contingency
Earth Targeting and Entry Safety Plan, Vol. 1, JPL D-29358, August 16, 2004 (includes JPL D-29980, Ind. Asses. for PPE)	JPL	Acid gas half-masks, SO_2 detection meter	SCBA; SO_2, CO, HCN detection meters	No mention of PPE or hazardous material monitoring.
Genesis Mission-Recovery Phase Systems Safety Plan, GNS 61000-200 Vol.3, JPL D-29566, Preliminary, August 2004	JPL	Para. A 2.6.1.4, acid gas half-masks, SO_2 detection meter	Paragraph B 3.1.2 SCBA + SO_2, CO, HCN detection meters	Para 2.5, top-level contingency planning: no PPE mentioned, but "safety and security perimeter" required; also identification of "all potential hazards and provide remediation plans."
Sample Return Capsule Recovery Operations Plan, GN-65100-100, August 23, 2004, Rev. A	LMA	Para. 3.2, "…Simple colorimetric detector tube "sniff"…"	Not in document scope	Para. 4.3, detailed contingency planning: no mention of PPE or ordnance hazard.
Genesis SRC Ground Operations for Solar Wind Recovery, GN_1R11-New, August 16, 2004	LMA	Not in document scope	SCBA + SO_2, CO, HCN detection meters	Recovery team checks for SO_2, CO, HCN; no PPE specified

3.3.1.2 Operations

- **Genesis recovery personnel did not follow and execute JPL-mandated hazardous material and personal protective equipment requirements, as detailed in the *Earth Targeting and Entry Safety Plan, Vol. 1* (JPL D-29358) and *Genesis Mission-Recovery Phase Systems Safety Plan, Vol. 3*, (GNS 61000-200, JPL D-29566).** Half-mask gas respirators were not used during the first ground approach by the recovery team lead. Although the use of half-mask gas respirators is not stipulated for contingency operations in LMA document *Sample Return Capsule Recovery Operations Plan, Rev. A* (GN-65100-100), it is clear that paragraph 2.5 of JPL document *Genesis Mission-Recovery Phase Systems Safety Plan, Vol. 3* (GNS 61000-200, JPL D-29566), Preliminary, requires that a "safety and security perimeter" be established, identification made of "all potential hazards," and provisions made for "remediation plans" for contingency situations. The JPL requirement to use half-mask gas respirators for all approaches to the SRC during nominal operations would no doubt be required by JPL for any personnel approaching the SRC during contingency operations.
- **SRC safety perimeter was verbally enforced and ineffective.** One recovery aircraft person was observed in video footage crossing twice into the SRC mortar ordnance "personnel exclusion zone" (30 degrees to either side of the drogue chute mortar centerline). The Vertigo DFO is seen on the video footage turning his head at the zone incursion and communicating warnings by voice and hand gesture. The person who initially crossed the exclusion zone is then seen walking back across the zone again.
- **Hazardous material awareness training could not be verified for all personnel with potential for exposure.** Review of project requirements, personnel interviews, and training documentation did not reveal a consistent and documented method for ensuring that "right to know" hazardous material training was given to all recovery personnel.

- **Follow-up medical examination and debriefing was not provided to the individual who, not wearing respiratory protective equipment, was closest to the SRC debris when the SO_2 detector went into alarm.** The individual was referred to his organization's health and medical entity for follow-up examination and debriefing (refer to personnel interviews).
- **Communication paths optimized for nominal operations impeded communications during contingency operations.** The number of radio communication units was purposely limited to ensure safe and clear communication during landing operations. However, more units would have helped communication between Genesis project management and field recovery personnel during the first 60 minutes after impact. For example, RT-B drove to the SRC impact site only to have a returning vehicle inform them that all teams were to return to MAAF for a planning meeting—this occurred after RT-B had traveled for 30 minutes. RT-B or their ground vehicle did not have a radio unit and did not know that a return-to-base order had been issued (refer to initial MIB statements/logbooks from recovery teams and interviews with recovery team personnel). More communication devices between the several ground and flight units would also have prevented the Vertigo crew member from walking across the active mortar field.

3.4 FINDINGS

Findings and recommendations presented in this report are based on the following definitions of proximate and root causes, found in *NASA Procedural Requirements for Mishap Reporting, Investigating, and Recordkeeping* (NASA NPR 8621.1).

> **Proximate Cause**. The event(s) that occurred, including any condition(s) that existed immediately before the undesired outcome that directly resulted in its occurrence and, if eliminated or modified, would have prevented the undesired outcome. Also known as the direct cause(s).
>
> **Root Cause**. One of the multiple factors (events, conditions, or organizational issues) that contributed to or created the proximate cause and subsequent undesired outcome and, if eliminated or modified, would have prevented the undesired outcome. Multiple root causes typically contribute to an undesired outcome.

A review and analysis of the five general assessment findings resulted in three proximate causes.

3.4.1 Proximate Cause 1: Inadequate Configuration Management of Requirements

A variety of documents were examined, and a high degree of variability was found in the extent of PPE requirements identified in those documents. Additionally, there were many sets of requirements for the "no MAR contingency" condition. However, there was never any apparent attempt to coordinate and integrate these requirements by having a higher-level document levy requirements on each of the areas (and show traceability to the lower-level requirements), or by integrating these requirements into a consolidated and cohesive document used by all parties involved in the recovery operation.

3.4.2 Proximate Cause 2: Inadequate Contingency Planning and Training

The various versions of "no MAR contingency" requirements did not address PPE at all, in spite of the significant attention paid to the need for PPE during normal operations. There were also no operational directives in any of the various contingency plans for hazardous materials. In fact,

minimal consideration was given to contingencies for the potential existence of live (unfired) ordinance onboard the SRC. No detailed pre-existing procedure was in effect for safing the ordinance.

Contingency planning was further complicated by an unclear chain of command and imprecisely defined roles (i.e., who was responsible for what action?). In addition, roles and responsibilities were not communicated clearly to the teams.

The lack of training and traceable training was also a factor. This refers not only to training for PPE and hazardous materials handling but also to training in contingency scenarios. Except for the curation team, there is no evidence that the teams involved in the on-site recovery had walked through the procedures for various contingency events prior to the SRC recovery.

3.4.3 Proximate Cause 3: Inadequate Contingency Execution

The evidence presented from the actual operation demonstrates a failure to properly execute the contingency plans. First, a wind sock was established only after SO_2 was discovered inside the SRC. In addition, the first approach by an individual to the SRC and first close examination occurred without the use of required half-face respirators. Consequently, there was no clear contingency followed as specified.

Furthermore, poor field communications were demonstrated in nearly every aspect of the initial SRC examination and recovery. This led to personnel being placed at risk, as evidenced by the flight member crossing in front of the unfired mortar exclusion zone. In fact, he did this twice due to misinterpreted hand signals that directed him to avoid the exclusion zone. There was also weak communication between project management and the field teams, as evidenced by the dispatch and recall of teams for meetings. Finally, there was no medical follow-up for those who were exposed to the potentially toxic environment in the field, even though medical attention was suggested.

3.5 ROOT CAUSES AND RECOMMENDATIONS

JPL will be conducting more real-time mission events as the Laboratory continues its shift from fly-by reconnaissance of planetary bodies to direct interaction with the planets and other bodies in the solar system. This interaction ranges from in situ surface activities such as rovers to actual sample returns not unlike the Genesis effort. It is understandable that the Laboratory is likely to experience learning events such as the Genesis mishap. Thus, it is important that the Laboratory learn from these events in order to both improve the likelihood of success in returning valuable science and also in providing safe operations.

The identification of three proximate causes relative to safety and communication leads to the identification of root causes. The identification of root causes will help eliminate the likelihood of similar failures in future missions. Data, which was carefully reviewed, included interviews with individuals associated with the Genesis SRC recovery. The reporting of events leading up to the SRC recovery date was essential to understanding the background for the safety and communication-related proximate causes of the mishap. Such an analysis led to additional understanding of the conditions, and suggested plausible root causes to the recovery and ground safety sub-team.

3.5.1 Root Cause 1: Inadequate Resources to Properly Prepare for the Event

Genesis was a Discovery-class mission, which, by definition, implies limited total resources. The amount of effort required to prepare for the reentry and recovery was clearly underestimated, and there was insufficient personnel available to deal with the large number of issues that needed to be addressed. In addition, the need to support large numbers of reviews stretched thin the already limited workforce, as they not only tried to support these reviews, but attempted to follow through with the recommended actions as well. This was especially true as the date of reentry drew closer.

The lack of sufficient resources was especially harmful because it resulted in the inability to properly staff the systems engineering and configuration management tasks that would have ensured that the required consistencies between important procedural documents were established and maintained. Limited resources also restricted the ability to make timely updates to the documentation. In particular, important changes were made in the last few days before reentry, resulting in insufficient time to properly inform and adequately train the recovery team. This failure caused documentation inconsistencies for the recovery team, and was magnified by the lack of a configuration management coordinator.

Another related shortcoming was the minimal amount of coordinated training on PPE and other safety-related issues. The individual training shortfall was exacerbated by the failure of the recovery team to properly "dry run" potential contingencies. Their attention was focused on the nominal recovery, to the detriment of training for the contingencies of "no MAR" situations.

Recommendation

R10 Update *JPL Flight Project Practices* (JPL Rules! Document ID 58032) to assure early definitive planning and identify adequate funding and schedule margin during the late-mission time frame necessary to support late-mission-critical activities (reviewing, testing, and necessary training to ensure mission success). This requirement is especially true for sample return and surface operations missions, which are only now becoming a significant part of JPL mission work.

3.5.2 Root Cause 2: Insufficient Leadership Attention to the Details

Insufficient leadership attention is arguably a consequence of the limited resources available to provide adequate staffing of project personnel. Nevertheless, the project management is accountable for the success of the mission. The chain of command for various contingencies was inadequately elaborated and explained. Differences of opinion existed as to the Project Manager's roles and responsibilities during recovery operations. The roles were not identified, documented, and/or communicated. This resulted in mixed signals and contributed to a sense of confusion during the early part of the recovery following the impact of the SRC.

"Safety first" was not an adequate part of the project management approach. In fact, there was a lack of dedication on the part of the project leadership in regard to safety issues. For example, management minimized the concern expressed by JPL Safety personnel about the likelihood of battery rupture in an impact situation. Although there was a directive to comply with safety issues,

especially in the area of PPE issued by the Project Manager, there was no obvious commitment to do so by other members of the project leadership.

Recommendation

R11 Require safety plans for sample return missions to be approved and signed off by the cognizant "Directors-for" for both the safety organization and the doing project's directorate. Further, ensure that project management chain of command is clearly identified in the appropriate project-level document(s). Finally, require all Category A risks (i.e., those with severe mission success impact) follow the *JPL Flight Project Practices* mandates regarding Project Manager signature approval.

3.5.3 Root Cause 3: Inconsistent Contingency Planning and Preparation

Many of the contingency reviews and other actions related to contingency planning were delayed until late in the project life cycle. Contingency plans were being created and updated days before re-entry, with insufficient time to communicate those changes across the project and to prepare the required document changes. There was no project buy-off or signature to some of the contingency plans, thereby not enforcing project management buy-in or project enforcement.

The behavior of personnel initially involved on scene was not consistent with any plan. For example, the first person to arrive at the SRC approached upwind but without the Safety-prescribed PPE (i.e., half-face gas mask). Video evidence clearly shows that the first person to arrive at the scene placed his face closer to the SRC than a second individual placed the SO_2 monitor, without consideration of potentially toxic gases and unexploded ordinance.

There was no single document defining the contingency plan and associated operations. In addition, there were no exercises (i.e., training activities) under the various contingency situations. Such dry runs would have prepared the on-scene team to perform appropriately while identifying potential harmful behaviors. Contingency execution was relegated to doing things impromptu, without a well thought-out consequence-based procedure to which the team had been trained.

Recommendations

R12 Provide project management training to ensure necessary attention is given to contingency plans; incorporate a section on safety and contingency planning into project manager workshops.

R13 Require a single overarching contingency plan at the project level for all missions. This document would define the requirements for all other project subelements. These contingency requirements would include the identification of required tests and training activities, ORTs, etc.

3.5.4 Root Cause 4: Poor Communications at the Scene

Personnel on the scene were not equipped with proper communication capabilities; consequently, intentions were confused and conflicting. It was clear from the actions observed during the early minutes after impact that individuals were not able to communicate adequately. There are several examples:

- Lack of communication between on-scene personnel and mission control and the Project Manager resulted in differing instructions for the contingency review meeting. This caused much wasted effort.
- Lack of communication between the on-scene recovery team and the Project Manager resulted in recovery actions proceeding in an ad hoc manner and without the Project Manager's approval.
- Lack of clear communication between the on-scene personnel resulted in an individual walking in front of the mortar personnel exclusion zone twice.

Recommendation

R14 In *JPL Flight Project Practices* (JPL Rules! Document ID 58032), clearly identify communication requirements for recovery-type missions (such as sample return missions and balloon flight experiments) that ensure effective communication between the project manager and on-site personnel, as well as among on-site personnel. This may be incorporated into a more general practice on identifying requirements on communication between multiple operations sites (including temporary sites, such as a landing recovery site) and within each operations site (including temporary sites).

4. CLOSING RECOMMENDATIONS

The recommendations presented in this report should *not* discourage NASA or JPL from continuing its support of the Discovery Program. While it is recognized that the recommendations made in this report will require resources, they must not become so onerous that the Discovery Program cannot support them. Discovery has provided a great service to scientists, students, and the general public. By increasing the number of science missions, much more science has been gained than lost. In addition, it should not be lost on the reader that Genesis has not been a total failure. Even though the final reconstruction of science is yet to come, the Genesis samples are in-hand and being evaluated.

The specific recommendations in this report, if implemented, may ensure a higher success rate for the Discovery Program. The recommendations should be implemented as new missions and decisions are made within the Discovery Program.

APPENDIX A: COMPREHENSIVE DROGUE NOT DEPLOYED FAULTS

Table A-1a. Fault 1: Electrical Power Failure

No.	Fault Type	Assigned Value: **Unlikely**		
		Credible	Unlikely	Not Credible
1.1	**Spacecraft bus sequence wrong**			**X**
1.1.1	Battery online command incorrect			**X**
1.2	**Power state of circuits incorrect (relays)**		**X**	
1.2.1	Cable cut effects		**X**	
1.2.2	Spin up effects			**X**
1.2.3	Separation shock effects		**X**	
1.2.4	Entry load effects			**X**
1.2.5	Power off transient in MDE card toggles power relays			**X**
1.2.6	Relay did not connect to EST position		**X**	
1.3	**Power electronics design flaw**			**X**
1.4	**Power disconnected on entry**			**X**
1.4.1	Battery enable plug came loose			**X**
1.4.2	Entry loads disconnected power connectors			**X**
1.5	**Entry thermal environmental effects**		**X**	
1.5.1	Entry plasma effect on cut cables		**X**	
1.5.2	Overheating and shorting of cables			**X**
1.6	**Inadequate battery voltage and power for avionics, or to fire ordnance**		**X**	
1.6.1	Excessive electrical loads		**X**	
1.6.1.1	External short drained battery			**X**
1.6.1.2	Battery drained before entry-excess avionics load		**X**	
1.6.1.3	Deadface issue drained battery			**X**
1.6.2	Inadequate battery		**X**	
1.6.2.1	Battery drained before entry—bad power model		**X**	
1.6.2.2	Battery temperature too low for required current, in flight			**X**
1.6.2.3	Battery stored at too high temperature, in flight		**X**	
1.6.3	Mechanically damaged battery (cell leak, open circuit, short circuit)			**X**
1.6.4	Battery thermostat open on EDL			**X**
1.6.5	Depassivation not complete			**X**

Table A-1b. Fault 2: Avionics Failure in the SRC

No.	Fault Type	Assigned Value: **Credible**		
		Credible	Unlikely	Not Credible
2.1	**G-switch did not activate sequencer**	**X**		
2.1.1	Improper orientation of G-switch	**X**		
2.1.2	Loads prevented G-switch activation			**X**
2.1.2.1	G-switch cannot handle design spin loads			**X**
2.1.2.2	Spin rate exceeded G-switch capability			**X**
2.1.2.3	G-switch cannot handle design angle of attack loads			**X**
2.1.2.4	Angle of attack exceeded G-switch capability			**X**
2.1.3	High-frequency chatter activation interference			**X**
2.1.4	Space effects rendered G-switch unusable			**X**
2.1.5	G-switch shorted at test connector			**X**
2.1.6	G-load profile off-nominal			**X**
2.1.6.1	Loads never reached trigger level		**Combined with 2.1.6**	
2.1.6.2	Loads never dropped below trigger prior to impact		**Combined with 2.1.6**	
2.1.7	Incorrect G-switch installed			**X**
2.1.8	Mechanical failure of G-switch			**X**
2.2	**Low pass filter wrong time constant**			**X**
2.2.1	Improper filter design			**X**
2.2.2	Entry dynamics exceeded filter capability			**X**
2.3	**Reset on timer trigger**		**X**	
2.4	**Oscillator frequency wrong**			**X**
2.5	**Latent fault due to high voltage discharge**			**X**
2.6	**Pyro ballast (current limiting) resistors damaged in test**			**X**
2.7	**Timing of ANDed circuits out of phase**			**X**
2.8	**Timer jumpers wrong, causing excess delay**			**X**
2.9	**EMI disrupted circuit operation**			**X**
2.9.1	Internal EMI			**X**
2.9.2	External EMI			**X**
2.10	**Environment effects on avionics**		**X**	
2.10.1	Space (micrometeoroid, orbit debris, radiation, vacuum)		**Closure record combined with 2.10**	
2.10.2	Entry effects, thermal induced		**Closure record combined with 2.10**	
2.10.3	Entry effects, plasma induced		**Closure record combined with 2.10**	
2.10.4	Entry effects, mechanical induced		**Closure record combined with 2.10**	
2.11	**Cross-strapped pressure transducer interferes with fire command**			**X**
2.12	**Avionics shorted, internal**			**X**
2.13	**Fuses opened**			**X**

Table A-1c. Fault 3: Harness/Connector Failure

No.	Fault Type	Assigned Value: **Unlikely**		
		Credible	Unlikely	Not Credible
3.1	**Circuits not connected to pyro**		**X**	
3.1.1	Connected wrong		**X**	
3.1.2	Connectors loose or demated		**X**	
3.1.2.1	Separation shock	**Closure record combined with 3.1.2**		
3.1.2.2	Entry loads	**Closure record combined with 3.1.2**		
3.1.2.3	Improper installation	**Closure record combined with 3.1.2**		
3.1.3	Bent pin/contamination/open in connectors		**X**	
3.2	**Harness open**		**X**	
3.2.1	TPS failure, breach or excessive temperatures			**X**
3.2.2	Micrometeoroid damage/orbit debris		**X**	
3.2.3	Harness flexing, e.g., hinge movement			**X**
3.3	**Harness shorted**		**X**	
3.3.1	TPS failure, breach or excessive temperatures			**X**
3.2.2	Micrometeoroid damage/orbit debris		**X**	
3.3.3	Harness flexing, e.g., hinge movement			**X**
3.3.4	Test port plug shorted out			**X**

Table A-1d. Fault 4: Drogue System Failure

No.	Fault Type	Assigned Value: **Unlikely**		
		Credible	Unlikely	Not Credible
4.1	**Pyro failed**		**X**	
4.1.1	NSI failed to fire		**X**	
4.1.1.1	NSI is a dud/degraded/contaminated propellant		**X**	
4.1.1.2	Inadequate current for required duration, all fire		**X**	
4.1.1.3	Broken bridge wire			**X**
4.1.1.4	Shelf life exceeded			**X**
4.1.2	Mortar booster charge failed to fire			**X**
4.1.2.1	No propellant in booster charge		**Combined with 4.1.2**	
4.1.2.2	Wrong amount/wrong propellant in booster charge		**Combined with 4.1.2**	
4.1.2.3	Booster charge is a dud/degraded		**Combined with 4.1.2**	
4.1.2.4	FOD		**Combined with 4.1.2**	
4.1.2.5	Propellant contamination		**Combined with 4.1.2**	
4.1.2.6	Incomplete combustion of propellant		**Combined with 4.1.2**	
4.1.3	TPS failure, breach or excessive temperatures			**X**
4.2	**Drogue parachute did not deploy**			**X**
4.2.1	Mortar lid not expelled		**Combined with 4.2**	
4.2.1.2	Insufficient gas pressure generated by booster charge		**Combined with 4.2**	
4.2.1.2	Manifold failed to contain/transfer energy		**Combined with 4.2**	
4.2.2	Sabot jammed		**Combined with 4.2**	
4.2.3	TPS failure, breach or excessive temperatures			**X**

APPENDIX B: BATTERY ANALYSIS

Two primary (non-rechargeable) batteries[1] provided power to the electronics and ordnance devices on the Sample Return Capsule (SRC). Both batteries were housed in the same titanium enclosure (Figure B-1) and were the only source of energy for the SRC after being released from the Genesis spacecraft. The same batteries also provided power to Avionics Units A and B, one battery for each unit. The eight $LiSO_2$ cells were procured from SAFT and assembled by Eagle Picher. The cells were connected in series, with a blocking diode on the positive leg, and physically separated by a G10 board placed between them. Once the batteries were inside the enclosure, the void volume was filled with Eccofoam insulation and covered by several sheets of Kapton. A titanium cover with three windows was secured on the top with eight screws.

Being primary batteries, they remained inactive (open circuit) for the majority of the mission, with the exception of some short-duration tests during Assembly, Test, and Launch Operations (ATLO). They were put online prior to SRC separation from the main spacecraft, after both batteries had been through a depassivation process.

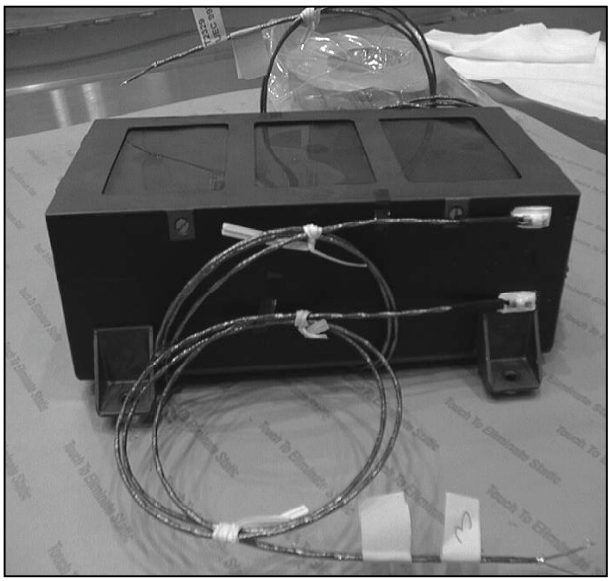

Figure B-1. Genesis battery with temperature sensors attached prior to installation of heaters and black Kapton top layer

After the hard landing of the SRC in the Utah desert, speculation abounded as to the batteries' contribution to the failure. SO_2 monitors at the impact site indicated presence of the gas, a main component of the battery cells, suggesting a possible battery leak. Initial battery voltage measurements (post-impact) indicated a totally depleted battery. However, the outer physical appearance of the battery after the impact did not show significant damage.

The battery was de-integrated from the SRC and shipped to the LMA facility in Denver. Later, the NASA MIB and JPL FRB decided to perform the full investigation of the battery at JPL. Guided by pertinent sections of the fault tree, a battery analysis and test plan was developed that would methodically inspect, test, and disassemble the battery down to the cell level, and if necessary, to the cell component level.

[1] The two batteries are collectively referred to as the SRC battery.

B.1 INVESTIGATIVE PROCEDURES

Five separate procedures, described in the following sections, were planned to address closure of the various branches of the fault tree. They were developed such that follow-on procedures depended on the findings of the previous procedure.

B.1.1 Procedure 1: Battery Inspection and Test

A thorough inspection of the battery was performed at JPL, including dimensions, weight, and some electrical measurements at the battery level. Peripheral devices such as the four temperature sensors and the three heater strips were also measured. All measurements were also done on the ATLO battery for comparison. The outer appearance of the battery looked very clean and indicated minimal damage from the hard landing. Figure B-2 shows the battery during initial inspection at JPL.

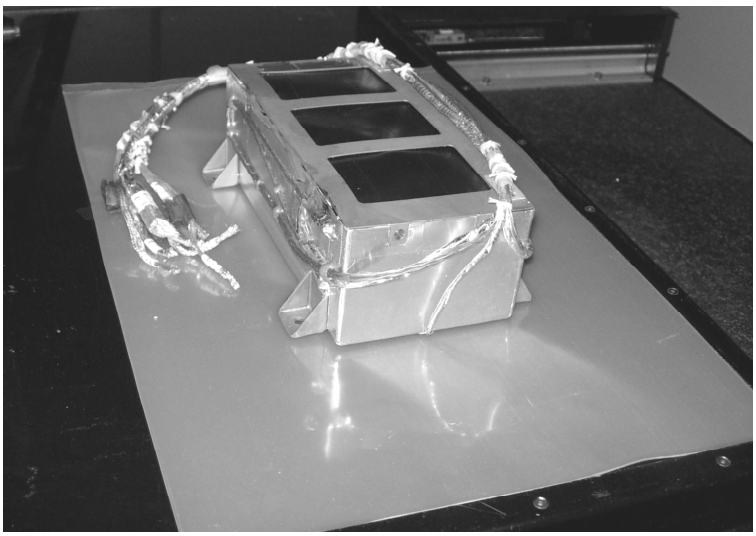

Figure B-2. SRC battery, pre-flight

With the exception of a bowed top cover and some discoloration/staining on the top cover and black Kapton (Figures B-3, B-4), the battery surprisingly escaped severe damage from the hard landing. Physical dimensions of the battery were measured and were found to be comparable to pre-flight measurements, with the exception of height. This discrepancy is due to the bowing of the top cover.

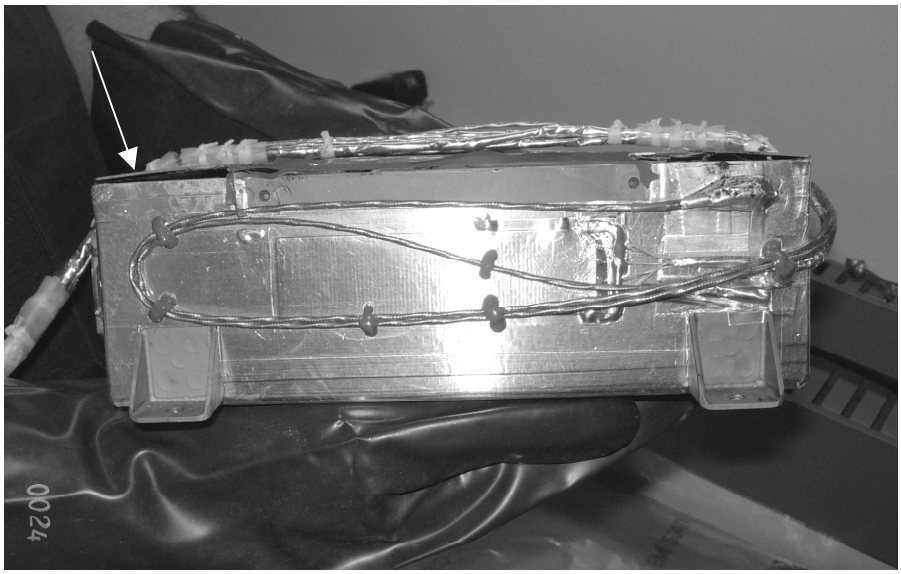

Figure B-3. Battery showing bowed cover

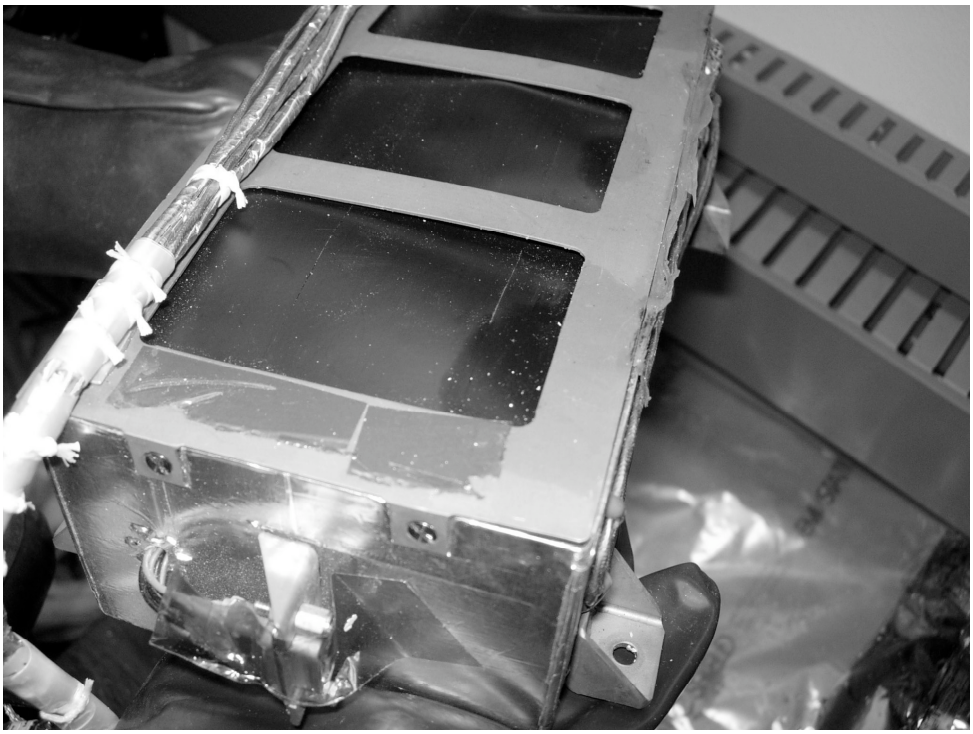

Figure B-4. Battery showing stained glass

The post-flight battery weight of 1.810 kg indicated a decrease of about 250 grams compared to the as-built weight (ATLO battery weight was 2.060 kg). Later procedures would show that this was due to loss of active materials from the cells due to venting.

Battery voltages were measured at JPL and read 0.379 volts and 0.206 volts, lower than the last measurements taken at UTTR. This would indicate that (a) the batteries continued to discharge, (b) the internal impedance of the batteries increased, or (c) possibly more SO_2 was released from the individual cells after the first measurement. Battery isolation resistance was measured between the battery terminals (through the electrical connector) and chassis; there was adequate isolation.

There are four AD 590 temperature sensors on the battery, two on each side at diagonally opposing corners. The performance of all the sensors was measured using the circuit shown in Figure B-5.

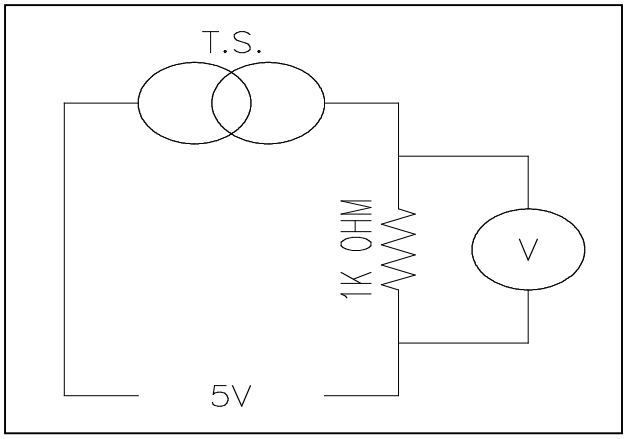

Figure B-5. Test circuit used to measure performance of temperature sensors

A baseline measurement of current across the resistor was taken using a pristine sensor. All flight sensor temperature readings were consistent with the baseline measurement, validating the in-orbit temperature telemetry of the battery.

Three heater elements were located on the SRC battery—one on each longitudinal side and one on the bottom. The heater elements on the sides were paralleled together and were used to heat the battery prior to the depassivation process. The bottom heater element was used after the batteries were commanded to the EST to keep the battery at optimum operating range throughout the release and reentry phase. The heater elements were purely resistive devices and were measured using an Agilent 34401A 6-μ digit multimeter. No short-circuit or open-circuit conditions were observed, and the resistance measurements were consistent with expected values.

The battery was also inspected using a Fein focus x-ray to see the condition of the battery inside the chassis. This tool could help determine whether any cell cases had been compromised either by venting or the hard impact. Having this information in hand would also help develop a safe disassembly procedure. Exposures were taken from sufficient angles to see if anything out of the ordinary could be detected. Results showed that the cells were intact but otherwise were inconclusive, i.e., the images did not reveal if any of the cells had vented.

B.1.2 Procedure 2: Top Cover Removal

The ATLO battery (i.e., one that had not been exposed to a flight environment) was opened first for comparison purposes. Figure B-6 shows the top of the ATLO battery underneath the cover and Kapton layers. The Eccofoam insulation looks pristine and has a pinkish color. By contrast, when the SRC battery top cover was removed, there was significant discoloration of the Eccofoam insulation, indicating exposure to excessively high temperatures (Figure B-7). The worst discoloration, almost black, was localized over the nickel cell interconnect tabs. This condition is consistent with high-rate discharge over a significant duration.

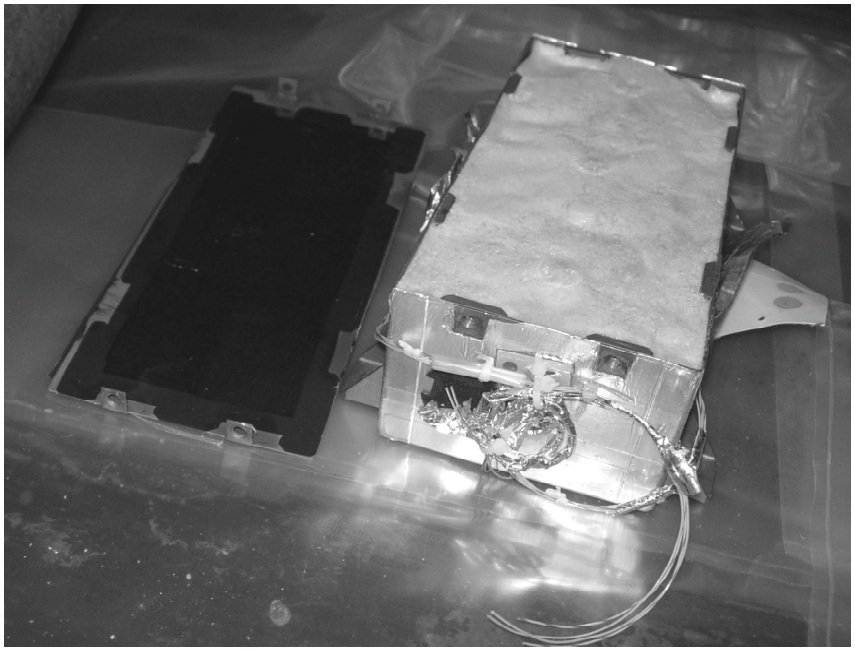

Figure B-6. ATLO battery showing pristine Eccofoam insulation

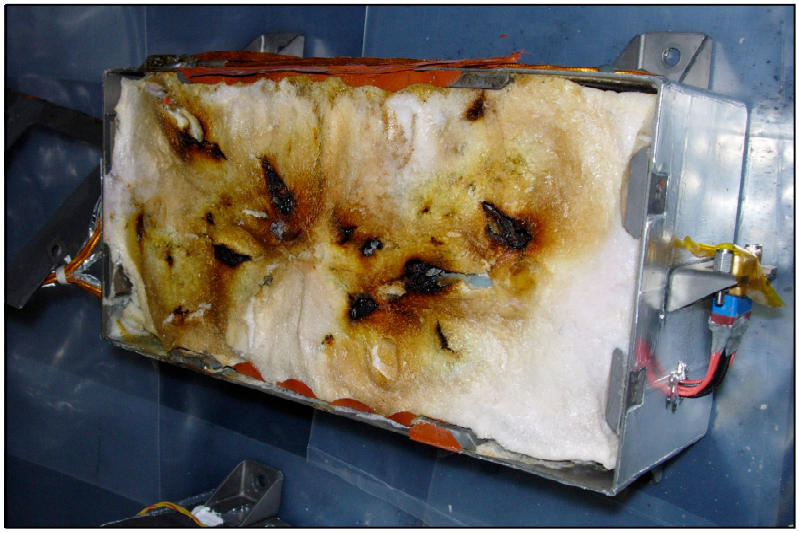

Figure B-7. SRC battery Eccofoam insulation

Pieces of the pyrolized foam were removed and revealed significant corrosion over the top of cells (Figure B-8). A piece of foam was tested to see how high a temperature would be required pyrolize it to a condition similar to the foam in the SRC battery. The foam started discoloration at 140˚C and showed significant discoloration at 200˚C.

Figure B-8. SRC battery cell tops

Close inspection of the battery revealed that one cell interconnect was broken—the connection from the positive of cell 4A to the negative of cell 3A. Cell 4A stands about a quarter of an inch higher that the rest of the cells, possibly as a result of lifting from energetic venting. This would explain the broken interconnect. Areas under the interconnect tabs showed significant heat damage.

B.1.3 Procedure 3: Battery Disassembly

A complete disassembly of the battery was undertaken. Careful attention was paid to see if any short-circuit condition had occurred. The blocking diodes, the wires, and the connector were carefully inspected, but no short-circuit evidence was observed. There was a sign of discoloration on the outside package of the diode and the surrounding Eccofoam, but electrical testing showed that the diodes were still forward biased and showed the proper voltage drop.

The cells were removed from the battery housing after all the interconnect tabs were cut. The cells showed significant corrosion at the bottoms, where the vent points were located, and also displayed significant heat damage underneath the cell interconnect tabs. Typical cell bottom and cell top photos are shown as Figures B-9 and B-10, respectively. Close inspection of the cells revealed that all cells had vented.

Figure B-9 (above left). Picture taken of a typical cell bottom (Cell 3A) after removal, illustrating the excessive corrosion evident due to the release of SO_2

Figure B-10 (above right). Picture taken of a typical cell top (Cell 3A) after removal, illustrating charred area underneath cell tab; Kapton tape placed on cell top to provide cell orientation details

After the cells were separated, they were individually X-rayed. Close inspection of the X-rays indicated that all the spiral plates inside the cells were still in place and appeared undamaged. No signs of internal short circuit could be seen.

B.2 FAULT TREE ANALYSIS

The fault with the most relevance to the battery analysis, "inadequate battery voltage and power for avionics, or to fire ordnance," has five major branches:

1. Excessive electrical loads
2. Inadequate battery
3. Mechanically damaged battery (cell leak, open circuit, short circuit)
4. Battery thermostat open on EDL
5. Depassivation not complete

The following paragraphs detail how these branches were closed out as noncontributors to the Genesis mishap.

B.2.1 Excessive Electrical Loads

Three possible scenarios were looked at for this branch of the tree.

External Shorts Drained Battery

A portion of the SRC harness bundle that included the battery harness showed obvious signs of discoloration, suggesting burning or high-temperature exposure. Measurement of the positive and return pins at the battery connector indicated that an electrical short existed. The harness was

removed and taken to the National Transportation Safety Board for further analysis (see Appendix C). Analysis indicates this is not credible.

Battery Drained Before Entry—Excess Avionics Load

The avionics loads were reviewed to see if they drained the battery before the SRC entered the Earth's atmosphere. There is no SRC current telemetry for the avionics load, so no direct measurement was available. However, reviewing the test results and using the mission simulation battery test results indicate excessive loads would be an unlikely cause.

Deadface Issue Drained Battery

The science payload canister in the SRC was controlled and powered through the spacecraft via an umbilical harness bundle. This umbilical interface was severed using a pyro-initiated bolt cutter prior to SRC release for entry and descent. For the most part, this interface was deadfaced to ensure no short circuit condition could affect either the spacecraft or the SRC. LMA performed a deadface analysis and concluded that cutting the umbilical interface did not affect the SRC battery. The MIB initiated an independent analysis performed by Mitchell Davis of the Goddard Space Flight Center Electrical Systems Branch. His analysis concurred with the Lockheed finding that the SRC battery was isolated from the umbilical interface, such that any short circuit condition on this interface could not possibly discharge it.

B.2.2 Inadequate Battery

Three different scenarios were looked at for this branch of the tree.

Battery Drained Before Entry—Bad Power Model

The power profile for the SRC was revisited. It was clear that there was ample margin in the battery to power the avionics and ordnance devices, even in worst-case conditions. The analysis shows that even at the worst-case 35% battery state-of-charge, either battery alone would still provide adequate current and ample voltage to fire the NSI for the drogue chute. For these reasons, this scenario was eliminated as a proximate cause.

Battery Temperature Too Low for Required Current (In Flight)

The $LiSO_2$ battery performance is optimal in a temperature range of 20 to 50˚C. The SRC battery had a heater to keep it within this range during entry and descent. In addition, the battery was heated to 50˚C for the depassivation process. The battery thermal analysis predicted the battery temperature to be around 30˚C at the time of drogue chute deployment.

The battery heater was inspected during the battery investigation at JPL and was still operational, (i.e., neither shorted nor open circuit). The warm-up of the battery in preparation for the depassivation was nominal, and the battery temperature prior to umbilical cut was within 2 degrees of that predicted. The temperature strips in the capsule were evaluated, and recorded temperatures were within prediction. The devices were calibrated post-flight and were within 2 degrees of reference. This validates the thermal model for the thermal analysis of the capsule. Hence, this scenario was eliminated as a proximate cause.

Battery Stored at Too High Temperature (In Flight)

During the early stages of the mission, after the SRC cover was opened, the battery temperature started increasing and exceeded the flight-allowable temperature of 23˚C. Over the 28-month mission, the battery temperature continued to increase, reaching a maximum of 60.5˚C ($LiSO_2$ cell degradation is greater at higher storage temperatures).

An extensive ground-aging test was undertaken by Lockheed immediately after the anomalous battery temperature condition was observed. Several cells/packs of representative $LiSO_2$ cells were subjected to tests at different temperatures. Some followed mission profile plus 5, 10, and 15˚C and some were tested at different constant temperatures up to 70˚C. After the aging test, the cells and packs were subjected to depassivation and load profiles for entry and descent. All passed with ample margin except for the test pack, which was stored at a constant 70˚C. To make sure that in-orbit temperature telemetry was valid, temperature sensors were tested and the results compared to data on a pristine sensor. The data compared favorably.

B.2.3 Mechanically Damaged Battery

Several ordnance events subjected the SRC to mechanical load environments prior to the drogue chute deployment. These include the spacecraft-to-SRC cable cut, the SRC hinge separation, and the SRC/spacecraft separation. In addition, the SRC needed to sustain reentry loads. A scenario is possible where battery damage during one of these events could be sufficient to render the batteries unusable to power the avionics and ordnance devices. This failure mode was deemed noncredible based on the following:

- The SRC battery successfully passed all mechanical environmental qualification testing without deviations, including shock, random and axial acceleration.
- Complete disassembly of the battery did not reveal any signs of mechanical damage, with the exception of a broken cell interconnect tab on one battery. This broken interconnect could be attributed to the venting of the cell attached to the interconnect. It is highly likely that the tab broke when the cell vented, lifting this particular cell higher than the other cells in the battery. There were no broken interconnect tabs on any of the other cells.

B.2.4 Battery Thermostat Open on EDL

One of the archive battery drawings shows thermostats on the return leg of each battery. If both thermostats opened during entry and descent, no power would be available to the avionics unit and the ordnance devices. This failure mode was deemed noncredible based on the results of the battery X-ray inspection and disassembly. No thermostats were found on the batteries.

B.2.5 Depassivation Not Complete

Prior to release of the SRC, a 5-minute discharge of the batteries through a ~3-ohm load was performed to remove the passivation layer in the battery cells. At the conclusion of the discharge portion of the procedure, it was noted that the battery voltage was lower than expected, compared to ground test data. This raised the concern that insufficient removal of the passivation layer would not reduce the internal impedance of the battery to a level that could cause a low-voltage output, inadequate to initiate the pyrotechnics system.

In-orbit depassivation data was compared to the ATLO battery depassivation data and the voltages were very consistent. After the depassivation process, the ATLO battery was subjected to the SRC load profile, including simulated firing of ordnance, and showed adequate margin. All the ground-aging packs were also subjected to the 5-minute depassivation process and the SRC load profile, and successfully passed, with the exception of the pack that was stored at a constant 70°C. All test data indicate ample battery performance margin after a 5-minute depassivation.

The lower-than-expected end of depassivation voltage (as compared to ground test data) was determined to be a result of using a 10% higher value depassivation resistor in the ground test. A correction for the resistor value brought the two values within the expected range.

APPENDIX C: NATIONAL TRANSPORTATION SAFETY BOARD REPORT

The report is included as a separated file on this CD because only a password-locked pdf version of the report was available for our use. Numbering and formatting have not been altered to match the *Genesis Failure Investigation Report*.

Appendix D: Implementation of "Faster, Better, Cheaper"

The "faster, better, cheaper (FBC) concept, which was part of the basic NASA mission philosophy, was intended to increase the number of experimental missions. Instead of one 'big' billion-dollar experiment, NASA could launch a series of smaller cost missions (e.g., ~$200-250 million each), all within a fixed annual budget. It was recognized that the risk of mission success would increase, but with the hope that by using contractors, proven processes, hardware, and software the risks would be minimized. Some NASA leaders even felt that four out of five successes was better than one huge failure. Unfortunately, FBC became synonymous with "fixed-price" or "cost-capped." With science scope determined early in the project, and with fixed launch windows (fixed schedule), risk was the only variable the project team had to trade to maintain a fixed cost and schedule.

This concept had negligible impact on JPL, but significantly increased LMA programmatic risks. The FBC concept "caps" the contract value. As JPL is not a profit and loss (P&L) center, and assuming the JPL project management team and processes are adequate, the impact of FBC would be negligible. For LMA, on the other hand, FBC increases program risks, since:

- Cost is capped, meaning profits are decreased as programmatic issues develop—cost growth could occur to the point that profit potential diminishes, forcing LMA to reduce program personnel, reduce/eliminate tests, etc., all of which increase the risk of program failure.
- Schedule is most often fixed, as the FBC Discovery Programs are usually planned to meet a solar launch window where failure to meet this window would mean a launch delay of 18 to 24 months. Essentially, this means mission failure because the cost cap would be broken, causing cancellation of the mission.

Thus LMA, a profit-making contractor, was faced with fixed costs for a development program and a firm a launch schedule (later relaxed). With a fixed cost and fixed schedule, and maintaining a given mission success risk level, a performance trade would have to occur whenever cost or schedule risks required reserves beyond those available. But performance trades generally mean some redesign and/or retest, which increases the cost and impact to the schedule. Therefore, the only real viable remaining to trade was mission success, i.e., risk. Both JPL and LMA, at the Project Manager level, believed strongly that if they exceeded the costs, the program would be cancelled.

This mission was selected with only 19% margin at confirmation and only 12% at CDR. All involved (NASA, JPL, and LMA) were convinced that because of the assumed heritage design, this was an acceptable position. However, once heritage was broken and design issues arose, there was only one place for monies to be found—the contractor's profits—which they gave up by increasing the risks of mission success to meet the cost-capped mission. Later, due to a launch slip and NASA-mandated changes, the contractor and project were able to request more money and reinstate a profit for LMA.

The current FBC criteria with a cost cap, fixed delivery schedule, and a fairly firm scientific performance package increases the risk of program failure due to the need of the profit-and-loss contractor to make a profit. With fixed budget and schedules, as program issues increase, the profit-and-loss contractor reduces personnel, systems engineering oversight, checks and balances, and testing to try to make a profit and avoid program termination.

APPENDIX E: EVENT TIMELINE

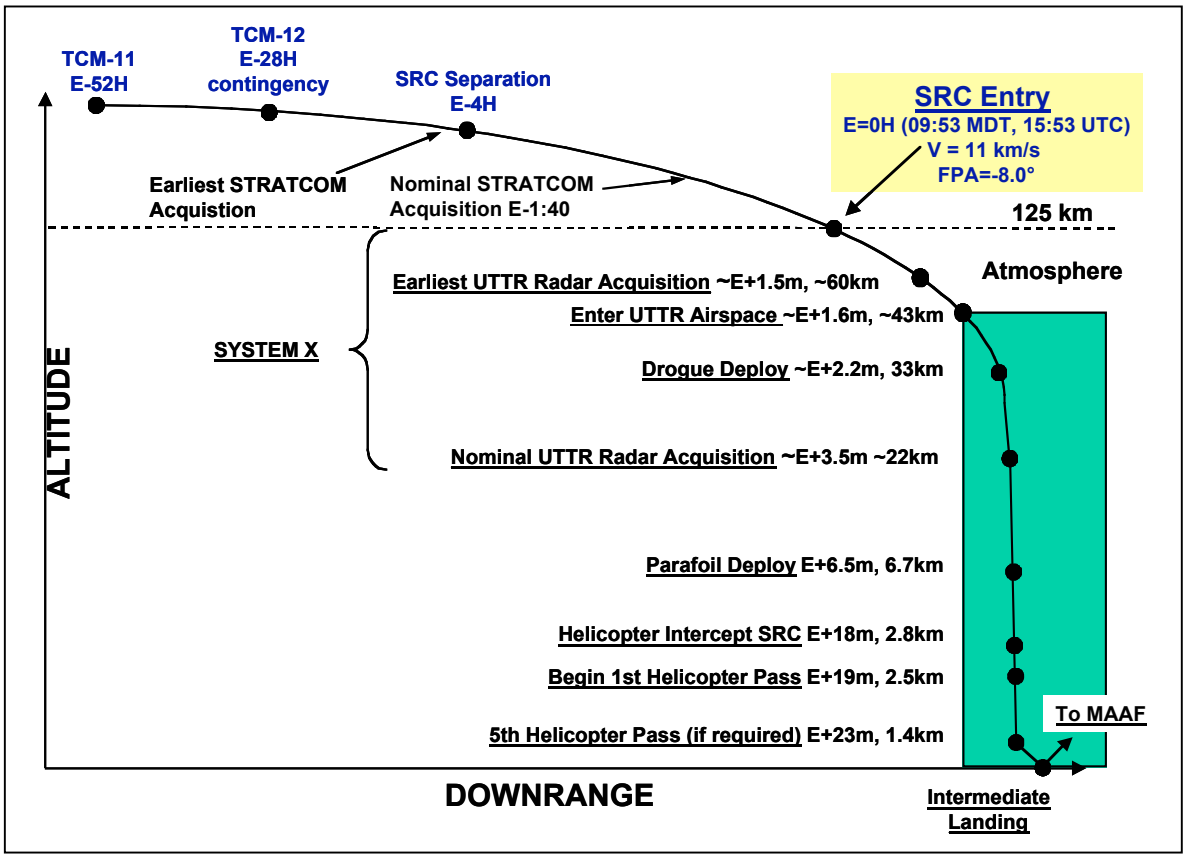

Figure E-1. Nominal timeline of post-entry events

Table E-1a. Detailed Timeline of Actual Events, Wednesday, Day of Year 252

UTC-d.hr.m.s	MDT-d.hr.m.s	E-hrs:m:s	Description of Event	Source of Data
09/08 15:52:47	09/08 09:52:47	00:00	ENTRY,125 km EIP	Mission logs
09/08 15:58:52	09/08 09:58:52	+00:06:05	IMPACT, Mach 0.17	Range camera
09/08 15:59:08	09/08 09:59:08	+00:06:21	SRC main chute should deploy (22,000 ft).	--
09/08 15:59	09/08 09:59	+00:06	Ground impact reported to recovery helicopters, range 8 nautical miles.	Video, witness statements and logs
09/08 16:05	09/08 10:05	+00:12	Helicopter formation arrives and circles to view site.	Video, witness statements and logs
09/08 16:13	09/08 10:13	+00:20	Oscar does "ground sink test" because of recent rains.	Video, witness statements and logs
09/08 16:14	09/08 10:14	+00:21	Oscar, Vertigo, and South Coast recovery helicopters land.	Video, witness statements and logs
09/08 16:15	09/08 10:15	+00:22	1st Oscar crew arrival. Recovery Team lead exits helo and drops "something" – may be SO_2 monitor.	Video
09/08 16:15	09/08 10:15	+00:22	Recovery team lead approached SRC from upwind to ~100 ft; checked that SO_2 monitor is on and exposed; removed camera from equipment bag.	Witness statements and logs
09/08 16:17	09/08 10:17	+00:24	Recovery team Lead confirmed that DACS separation bolts Droque mortar are unfired. Stays clear of mortar 30-degree exclusion zone.	Video, witness statements and logs

UTC-d.hr.m.s	MDT-d.hr.m.s	E-hrs:m:s	Description of Event	Source of Data
09/08 16:18	09/08 10:18	+00:25	Recovery team lead informed TTR Range On-Scene Commander of unfired ordnance; established verbal keep-out zone on +X side of SRC.	Witness statements and logs
09/08 16:20	09/08 10:20	+00:27	Vertigo Director of Flight Operations (DFO) talks with recovery team lead, then gestures to other Vertigo crew to 1) come over here, 2) put on mask. Vertigo crew dons mask in "Caution03" video frame.	Video, witness statements and logs
09/08 16:22	09/08 10:22	+00:29	Vertigo payload master, with mask, walks around SRC with SO_2 monitor.	Video, witness statements and logs
09/08 16:22	09/08 10:22	+00:29	Vertigo payload master doffs mask.	--
09/08 16:22	09/08 10:22	+00:29	Recovery team lead approaches SRC for close-up view of canister breach.	Video, witness statements and logs
09/08 16:22	09/08 10:22	+00:29	Gap of up to 3 inches allowed view of underside of one array isogrid.	Video, witness statements and logs
09/08 16:23	09/08 10:23	+00:30	Remainder of Vertigo/South Coast crew walks over to meet Oscar crew: video is being taken by Vertigo/South Coast crew.	Video, witness statements and logs
09/08 16:25	09/08 10:25	+00:32	One Vertigo/South Coast crewmember walks up to SRC with video camera and crosses "mortar ordnance 30-degree exclusion zone." Vertigo DFO calls him away from exclusion zone and Vertigo crewmember crosses back across exclusion zone.	video
09/08 16:26	09/08 10:26	+00:34	Oscar returns with more personnel.	Video, witness statements and logs
09/08 16:31	09/08 10:31	+00:39	First arrival of personnel from ground support team (GST1).	Video, witness statements and logs
09/08 16:34	09/08 10:34	+00:41	LMA Parachute Certified Product Engineer (PCPE) approaches SRC with SO_2 monitor (yellow) and places it on the upwind ground side of SRC.	Video, witness statements and logs
09/08 16:35	09/08 10:35	+00:42	LMA PCPE returns to SRC and moves SO_2 monitor (yellow) to opposite ground side of SRC (downwind). SO_2 monitor sounds alarm while he is holding the monitor. He drops it on the ground and quickly moves away.	Video, witness statements and logs
09/08 16:38	09/08 10:38	+00:45	Second arrival of personnel from GST1. JPL Environmental, Health and Safety Office personnel signals everyone to get back (All crews are cleared to ~200 feet upwind.) Wind sock is installed.	Video, witness statements and logs
09/08 16:37	09/08 10:37	+00:45	OSCAR helicopter lifts off to return to Dugway to ferry recovery team to landing site.	Video, witness statements and logs
09/08 16:37	09/08 10:37	+00:44	Recovery Team A leaves B1012 for Dugway hanger to board Oscar.	Witness Statements, Witness logs
09/08 16:45	09/08 10:45	+00:52	Recovery Team B leaves B1012 for impact site in UTTR vehicles with UTTR drivers (JPL QA, JSC Curation, Genesis PI, LMA Environmental Engineer, JPL Systems Safety Engineer.) In accordance with approved contingency procedures SO_2 monitors and SCBA were carried on board to safe area. Also on board were curation tools.	Witness Statements, Witness logs
09/08 16:51	09/08 10:51	+00:58	Vertigo and South Coast helicopters depart for MAAF.	Video, witness statements and logs
09/08 16:55	09/08 10:55	+01:02	Recovery team Lead departs scene with UTTR interface and GST1; UTTR On-Scene Commander and security detail remain to secure site for arrival of contingency response crews.	Witness Statements, Witness logs
09/08 16:55	09/08 10:55	+01:02	Recovery Team A boards Oscar but is directed to debark and go to a meeting in Kuddes.	Witness Statements, Witness logs
09/08 17:00	09/08 11:00	+01:07	Meeting starts in Kuddes.	Witness Statements, Witness logs
09/08 17:15	09/08 11:15	+01:22	After driving for approximately 30 minutes. Team B was intercepted by UTTR Interface who informed them that they were to turn around and go back to MAAF.	Witness Statements, Witness logs
09/08 17:50	09/08 11:50	+01:57	Ground support group arrives at MAAF.	Witness Statements, Witness logs

09/08 17:50	09/08 11:50	+01:57	Meeting completed at Kuddes.	Witness Statements, Witness logs
09/08 18:00	09/08 12:00	+02:07	Press conference in MAAF hangar.	Witness Statements, Witness logs
09/08 18:35	09/08 12:35	+02:42	Recovery team A departs on Oscar (LMA SRC Mechanical Lead, LMA Test Conductor, JSC Curation Lead, LMA Logistics, 3 LMA techs, LMA QA, JPL Canister Mechanical Lead, LMA Systems Safety). Recovery Team 'A' discusses plan of operations to be conducted when landed. Safety considerations are discussed in light of the live ordnance and battery condition.	Witness Statements, Witness logs
09/08 18:53	09/08 12:53	+03:00	Recovery team 'A' lands at SRC impact site. Team unloads equipment consisting of SO_2 monitors, pyro safing hardware, water, saws, flashlights, scissors, shovels, VOMs, tape, curation tools, JSC contingency kits, etc. Pools of water near impact site mean SRC could be wet. LMA systems safety engineer performs sniff test of area and then closer to SRC. No presence of SO_2 gas detected.	LMA GN_1R11 Work-authorizing documentation
09/08 19:00	09/08 13:00	+03:07	Close inspection of SRC to verify that no pyros fired. Crew stays away from front of DACS mortar tube.	LMA GN_1R11 Work-authorizing documentation
09/08 19:36	09/08 13:36	+03:43	DACS removed and secured. DACS safed while all personnel remained clear of front of mortar tube. Battery cables cut to remove power to pyros. All cabling to pyros cut on DACS and secured with Faraday cage (wires twisted and shorted); North side first then South. DACS lifted and placed on ground, facing down. Photos taken of inside of DACS and parafoil bag. Parachute risers cut from deck. DACS lifted and placed on ESD smock, photos taken.	LMA GN_1R11 Work-authorizing documentation
09/08 20:37	09/08 14:37	+04:44	Canister was pinching underside of backshell, needed to separate to remove. Cut strands of blanket on both sides and along seam. Severed cable on parachute deck – north side. Cut seal on south side. Removed half of backshell from impact hole. De-mated canister connecter and covered with faraday cage. Removed heat shield by saw cutting south end and cutting cables on north end.	LMA GN_1R11 Work-authorizing documentation
09/08 20:53	09/08 14:53	+05:00	Heatshield lifted out of hole and set on ESD smock	LMA GN_1R11 Work-authorizing documentation
09/08 21:00	09/08 15:00	+05:07	SRC battery disconnected. Avionics box taken off and labeled. Concentrator electronics boxes removed.	LMA GN_1R11 Work-authorizing documentation
09/08 21:45	09/08 15:45	+05:52	Decision made to transfer canister to Bldg. 1012 in Oscar. Canister wrapped in tarp for transport.	LMA GN_1R11 Work-authorizing documentation
09/08 22:00	09/08 16:00	+06:07	Telecon and update in Avery, Bldg. 1010. Press allowed to see film of SRC at impact site. Recovery team lead received clearance of the initial assessment photos of SRC (14 photos). SRC battery voltage checks: ~3 V open circuit.	LMA GN_1R11 Work-authorizing documentation
09/08 22:04	09/08 16:04	+06:11	Payload canister lifted out of impact hole.	LMA GN_1R11 Work-authorizing documentation
09/08 22:24	09/08 16:24	+06:31	SRC parts loaded onto Mudpuppy.	LMA GN_1R11 Work-authorizing documentation

Table E-1b. Detailed Timeline of Actual Events, Thursday, Day of Year 253

UTC-d.hr.m.s	MDT-d.hr.m.s	E-hrs:m:s	Description of Event	Source of Data
09/08 23:05	09/08 17:05	+07:12	Payload canister placed on Oscar helicopter for transport back to Avery hanger. Accompanied by JPL canister mechanical lead engineer and LMA crew. Backshell and DACS returned by Mudpuppy and transferred to pick-ups.	LMA GN_1R11 Work-authorizing documentation
09/08 23:05	09/08 17:05	+07:12	Backshell and DACS returned by Mudpuppy and transferred to pick-ups.	LMA GN_1R11 Work-authorizing documentation
09/09 00:25	09/08 18:25	+08:32	OSCAR returns to Avery hanger with team and payload canister. Canister placed on heatshield transport cart and then transported by forklift to Bldg. 1012.	LMA GN_1R11 Work-authorizing documentation
09/09 00:30	09/08 18:30	+08:37	Payload canister delivered to Avery Complex Bldg. 1012 high bay.	LMA GN_1R11 Work-authorizing documentation
09/09 00:40	09/08 18:40	+08:47	SRC heat shield and backshell and miscellaneous pieces arrive at Bldg 1012 and are unloaded in north end.	LMA GN_1R11 Work-authorizing documentation
09/09 01:00	09/08 19:00	+09:07	Canister remnants unwrapped in the high bay outside of the clean room. “Burnt” odor permeates from the wreckage.	LMA GN_1R11 Work-authorizing documentation
09/09 01:00	09/08 19:00	+09:07	SRC battery checks: #1 = 2.794 Vdc; #2 = 0.189 Vdc	LMA GN_1R11 Work-authorizing documentation
09/09 01:05	09/08 19:05	+09:12	Field recovery crew secures intermediate landing tarp over impact site to return in AM. Remains of SRC secured in tarp. All gear and samples loaded on Mudpuppy and then transferred to road vehicles (pick-ups).	LMA GN_1R11 Work-authorizing documentation
09/09 01:45	09/08 19:45	+09:52	Pushed canister into the clean room after JSC cleans off mud and dirt.	LMA GN_1R11 Work-authorizing documentation
09/09 01:55	09/08 19:55	+10:02	Recovery team members who secured site arrive at Bldg. 1012.	LMA GN_1R11 Work-authorizing documentation
09/09 02:05	09/08 20:05	+10:12	Debrief in Bldg. 1012.	Witness Statements, Witness logs
09/09 03:20	09/08 21:20	+11:27	Secure High Bay, B1012.	LMA GN_1R11 Work-authorizing documentation
09/09 17:30	09/09 11:30	+25:37	Another team heads out to the crash site to further document (written and photo) and attempt to retrieve additional hardware and science.	Witness Statements, Witness logs
09/09 19:20	09/09 13:20	+27:27	LMA shorts redundant pyro leads on DACS ordnance.	LMA GN_1R11 Work-authorizing documentation
09/09 19:50	09/09 13:50	+27:57	Battery voltage checks: #1 = 2.911 Vdc; #2 = 0.128 Vdc	LMA GN_1R11 Work-authorizing documentation
09/09 22:41	09/09 16:41	+30:48	Removed gold thermal blanket from SRC. Cut single-string attachment at corner.	LMA GN_1R11 Work-authorizing documentation

Table E-1c. Detailed Timeline of Actual Events, Friday, Day of Year 254

UTC-d.hr.m.s	MDT-d.hr.m.s	E-hrs:m:s	Description of Event	Source of Data
09/10 00:30	09/09 18:30	+32:37	Nine 5-gallon buckets of hardware material, collected at the crash site, brought into the Bldg. 1012 high bay by the field team.	LMA GN_1R11 Work-authorizing documentation
09/10 16:00	09/10 10:00	+48:07	Intermediate landing tarp that was used to wrap-up smaller pieces of damaged SRC and canister hardware opened-up in the Impound Area of the Bldg. 1012 high bay. Large and small pieces of the SRC, canister, and collector hardware are revealed. JSC sorts through the debris for science collectors per JSC procedures.	LMA GN_1R11 Work-authorizing documentation
09/10 16:30	09/10 10:30	+48:37	LM begins inventory of SRC components per Flag Sheet #1, PIRS# AP9926. JPL performs inventory of canister hardware per AIDS# 203180. All inventory operations occur in Bldg. 1012 in the Impound Area.	LMA GN_1R11 Work-authorizing documentation
09/10 19:30	09/10 13:30	+51:37	SRC battery checks: #1 = 2.414 & 2.418 Vdc; #2 = 0.143 Vdc.	LMA GN_1R11 Work-authorizing documentation

Table E-1d. Detailed Timeline of Actual Events, Saturday, Day of Year 255

UTC-d.hr.m.s	MDT-d.hr.m.s	E-hrs:m:s	Description of Event	Source of Data
09/11 22:20	09/11 16:20	+78:27	Removed lid-foil hub, with portion of a lid-foil attached, from the backshell by removing 4 fasteners and 4 washers.	LMA GN_1R11 Work-authorizing documentation

Table E-1e. Detailed Timeline of Actual Events, Monday, Day of Year 257

UTC-d.hr.m.s	MDT-d.hr.m.s	E-hrs:m:s	Description of Event	Source of Data
09/13 16:30	09/13 10:30	+120:37	Removed SRC Avionics Box A thermal cover by removing 1 fastener and 1 thermal washer—submitted to JSC curation for storage and emissivity testing.	LMA GN_1R11 Work-authorizing documentation
09/13 21:45	09/13 15:45	+125:52	SRC battery checks: #1 = 1.061 & 1.002 Vdc; #2 = 0.120 Vdc.	LMA GN_1R11 Work-authorizing documentation

Table E-1f. Detailed Timeline of Actual Events, Tuesday, Day of Year 258

UTC-d.hr.m.s	MDT-d.hr.m.s	E-hrs:m:s	Description of Event	Source of Data
09/14 21:18	09/14 15:18	+149:25	SRC battery checks: #1 = 0.806 & 0.808 Vdc; #2 = 0.087 Vdc.	LMA GN_1R11 Work-authorizing documentation

Table E-1g. Detailed Timeline of Actual Events, Wednesday, Day of Year 259

UTC-d.hr.m.s	MDT-d.hr.m.s	E-hrs:m:s	Description of Event	Source of Data
09/15 21:34	09/15 15:34	+173:41	SRC battery checks: #1 = 0.867 & 0.869 Vdc; #2 = 0.100 Vdc.	LMA GN_1R11 Work-authorizing documentation
09/15 22:00	09/15 16:00	+174:07	SRC battery checks: #1 = 0.874 Vdc; #2 = 0.101 Vdc.	LMA GN_1R11 Work-authorizing documentation
09/15 23:00	09/15 17:00	+175:07	Thermal close-out from down side removed and submitted to curation team. Canister filter removed from canister base and submitted to curation team. Removed radiator and thermal shield from SRC battery.	LMA GN_1R11 Work-authorizing documentation

Table E-1h. Detailed Timeline of Actual Events, Thursday, Day of Year 260

UTC-d.hr.m.s	MDT-d.hr.m.s	E-hrs:m:s	Description of Event	Source of Data
09/16 21:05	09/16 15:05	+197:12	SRC battery checks: #1 = 0.791 & 0.790 Vdc; #2 = 0.103 Vdc.	LMA GN_1R11 Work-authorizing documentation
09/16 23:00	09/16 17:00	+199:07	SRC battery removed and packed for shipment.	LMA GN_1R11 Work-authorizing documentation
09/16 23:00	09/16 17:00	+199:07	NSIs #1 and #2 removed from drogue mortar.	LMA GN_1R11 Work-authorizing documentation

Table E-1i. Detailed Timeline of Actual Events, Friday, Day of Year 261

UTC-d.hr.m.s	MDT-d.hr.m.s	E-hrs:m:s	Description of Event	Source of Data
09/17 18:00	09/17 12:00	+218:07	All 3 frangible bolts removed. DACS cable cutter (harness to drogue mortar) removed. Both parafoil reefing cutters removed. All ordnance devices packed for shipment.	LMA GN_1R11 Work-authorizing documentation
09/17 22:00	09/17 16:00	+222:07	Avionics Unit A and its mounting bracket removed from heat shield.	LMA GN_1R11 Work-authorizing documentation

Table E-1j. Detailed Timeline of Actual Events, Friday, Day of Year 261

UTC-d.hr.m.s	MDT-d.hr.m.s	E-hrs:m:s	Description of Event	Source of Data
09/20 22:00	09/20 16:00	+294:07	Prepared returned SRC hardware for shipment.	LMA GN_1R11 Work-authorizing documentation
09/21 14:00	09/21 08:00	+310:07	Returned SRC hardware (heat shield, backshell, Avionics Units A & B, DACS assy., main parafoil assy., assorted SRC components), SRC battery and ordnance loaded and shipped to Denver. SRC and canister would have shipped to JSC on Saturday 9/11.	LMA GN_1R11 Work-authorizing documentation
09/22 18:30	09/22 12:30	+338:37	Returned SRC hardware put in storage for MIB direction. SRC hardware in EMF room 134. SRC battery in SSB Battery Lab. Ordnance in Ordnance Lab.	LMA GN_1R11 Work-authorizing documentation

APPENDIX F: "NO MAR CONTINGENCY" DOCUMENTATION INCONSISTENCIES

Earth Targeting and Entry Safety Plan Vol. 1, JPL D-29358, August 16, 2004	3.3.1.2.2: One additional helicopter will carry the On Scene Commander and EOD, call sign "Oscar." During recovery it also will take station on Vertigo and remain clear of the MAR (approximately a 1 Nm standoff). If the MAR is successful, Oscar will either recommend or advise on the suitability of the location of the intermediate landing site. Oscar will stand off from the site until the intermediate landing and take off are completed, and then will depart the area and return to MAAF; or he/she and South Coast may proceed to locate and recover the drogue/DACS or to mark the impact point for ground recovery. 3.3.1.2.2.1: If the main parachute malfunctions, the Director of Flight Operations (DFO) will assess the parafoil health. If the parafoil flight is stable and predictable a MAR will be attempted. Otherwise, the SRC will continue to ground impact and the MAR helicopters will do a damage assessment. If there is no damage, the MAR helicopters will proceed with a recovery. If there is damage, then Oscar will secure the area until the NASA Payload and Curation teams can arrive at the site to assess recovery requirements. 3.3.1.2.2.2: If the MAR fails and the SRC continues to ground impact, the MAR Helicopters will do a damage assessment. If there is no damage, the MAR helicopters will proceed with a recovery. If there is damage, then Oscar will secure the area until the NASA Payload and Curation teams can arrive at the site to assess recovery requirements. 3.3.1.2.2.3: If the drogue chute fails then all helicopters will participate in a search for The downed SRC. Once the SRC is located all helicopters will depart the area except Oscar who will take charge of the impact area (i.e., secure the area) until the NASA Payload and Curation teams can arrive at the site to assess recovery requirements.
Genesis Mission-Recovery Phase Systems Safety Plan, Vol. 3, GNS 61000-200, JPL D-29566, Preliminary, August 2004	A.2.5 Off-Nominal Recovery An entry that results in failure of the parafoil to fully deploy, failure to achieve MAR, loss of the SRC after a MAR, or other unforeseen conditions that result in the SRC severely impacting the ground will require contingency preparedness. The following line items shall be addressed in contingency planning: o Establish a team leader to recover the Genesis SRC o Establish a safety and security perimeter around the Genesis SRC o Review methods for approaching and securing the Genesis SRC o Develop strategy for working in a high temperature daytime environment. o Identify all potential hazards and provide remediation plans o A detailed written report shall be initiated while at the scene and summarized into a formal document once the hardware has been recovered. o Detailed photographs shall be taken of the scene as well as individual photos of the hardware prior to being handled or moved.
Sample Return Capsule Recovery Operations Plan, Rev. A, GN-65100-100, August 23, 2004	4.3 Mid Air Retrieval Not Performed In the event of unsuccessful mid-air retrieval, or if mid-air retrieval cannot be attempted for some reason, a recovery of the SRC from its ground landing site will be necessary. There are two main scenarios for this recovery, distinguished by the availability of helicopter support, which depends on the exact nature of the contingency event. If helicopters are available, but mid-air retrieval is unsuccessful, the helicopters become the primary means of access to the landing site. If helicopter support is not possible, the fallback scenario depends on reaching the landing site by some combination of tracked and wheeled land vehicles. These two scenarios are detailed below. It is assumed in both cases that tracking by various means has provided a reasonably accurate fix on the impact location. Otherwise, the plans for reduced or no tracking data, outlined in Section 4.2, must be factored in. 4.3.1 Ground Retrieval by Helicopter In this scenario, helicopters are available and flying, i.e., equipment available, weather acceptable, etc., but mid air retrieval has not been effected. There could be a number of reasons for this situation, including not reaching the SRC in time, not establishing visual contact for intercept, failed MAR passes, or hardware failure. Depending on the situation, the helicopter crews will either witness the ground impact, or will be directed to the site by Mission Control, based on best available tracking. In a ground landing scenario, radar tracking may be lost up to 500 feet above the ground. With a glide ratio of 2.5:1, the parafoil could fly up to 0.5 NM in any direction from the last known fix to ground impact, assuming a worst case straight glide (no spiral). After the last radar fix, the GPS/DCNS takes over as the most accurate location aid. The Genesis implementation of GPS is based on the Standard Positioning Service (SPS), which provides the following accuracy: o SPS Predictable Accuracy o 100 meter horizontal accuracy o 156 meter vertical accuracy In either case, visual sighting of the brightly colored parafoil from the air can be expected immediately upon arrival.

	The Recovery Team Chief and helicopter crews will begin the following steps. 1. Prior to landing, photo-document the impact site, paying particular attention to the flight azimuth at impact, spread of the divots, any actions that may have been encountered, and any signs of visible damage to the SRC. 2. Radio a situation report to Mission Control; contact may be lost upon landing. Include a confirmation of the coordinate fix, using the on-board GPS system. 3. Land at the best available safe site, at least 100 feet from the SRC. 4. Secure the parafoil to prevent any (further) dragging by the wind. Each helicopter will have at least one crewmember experienced in ground handling of parachutes in windy conditions. 5. Evaluate the SRC for damage. Note the final resting orientation of the SRC, and whether there is evidence of tumbling or rolling. Photodocument, and radio report to Mission Control if possible. 6. The Recovery Team Chief will be authorized to move the SRC, according to one of the following steps: a. If the SRC is in a sound condition, and there is no evidence of dragging after landing or other trauma, the SRC may be lifted by the parafoil risers and longlined to MAAF as following a nominal intermediate landing. This is both the quickest and the gentlest handling and transport possible. b. If the SRC is basically intact, but there is some question as to the structural integrity of the latches or parafoil attach fittings, the SRC will be rolled onto the cargo net (carried aboard OSCAR). And the net attached to the loadline for carriage as a suspended longline load to MAAF. This provides the same gentle transport, but takes slightly more prep time, and incurs significantly more handling. c. If the SRC is judged unsound for flight, the payload team will be transported to the site. 4.3.2 Ground Retrieval by Ground Vehicles If helicopter have been unable to fly, a recovery team will be transported to the site by ground vehicles. At this time of year (September) much of the range will likely be dry enough to support wheeled vehicles. Tracked vehicles will be stationed at Pad 83 for access to any point in the footprint if required. The "548" as shown in Figure 4.3-1 can traverse most of the range terrain at 25-30 mph. It is equipped with a chain hoist capable of lifting the SRC into the bed. Figure 4.3-2 shows a MAR test vehicle being loaded aboard the 548 after a bare pole training flight. The Recovery Team Chief and helicopter crews will begin the following steps. 1. Photo-document the impact site, paying particular attention to the flight azimuth at impact, spread of the divots, any obstructions that may have been encountered, and any signs of visible damage to the SRC. 2. Radio a situation report to Mission Control; contact may be lost upon landing. Include a confirmation of the coordinate fix, using the on-board GPS system. 3. Secure the parafoil to prevent any (further) dragging by the wind. The ground team will have at least one crewmember experienced in ground handling of parachutes in windy conditions. 4. Evaluate the SRC for damage. Note the final resting orientation of the SRC, and whether there is evidence of tumbling or rolling. Photodocument, and radio report to Mission Control if possible 5. Recover the damaged SRC per the procedures in the Genesis SRC Ground Operations For Solar Wind Recovery
Genesis Mid-Air Retrieval Mission Plan, Rev. 5, Vertigo Doc. 3506-19-0085, August 20, 2004	14.8 Failed Capture, SRC Lands on the Ground In the event that the MAR helicopters are unable to MAR the SRC, the SRC will land on the ground, under parafoil. The SRC airframe will likely be undamaged. With approval from the On-Scene Commander, both helicopters will land and perform a normal intermediate landing, without the landing pad. 14.9 Failed Main Parachute In the event that the main parachute malfunctions such that it is not safe to MAR, the SRC will land on the ground with an increased descent rate. With On-Scene Commander approval, both MAR helicopters will land near the SRC. If the SRC airframe is undamaged, a normal intermediate landing will be performed, without the landing pad. If the SRC airframe is damaged, curation experts will be consulted by radio. Depending on the condition of the SRC airframe, the SRC will be ferried to Building 1012 in the normal fashion, towed by its risers, or if more severely damaged, towed inside a sling.

Utah Test and Training Range Mission Safety Review, Control Number 2004-12	1.3.3.2. One additional helicopter will carry the On Scene Commander and EOD, call sign "Oscar." During recovery it also will take station on Vertigo and remain clear of the MAR (approximately a 1 nm standoff). If the MAR is successful, Oscar will either recommend or advise on the suitability of the location of the intermediate landing site. Oscar will stand off from the site until the intermediate landing and take off are completed, and then will depart the area and return to MAAF; or he/she and South Coast may proceed to locate and recover the drogue/DACS or to mark the impact point for ground recovery. 1.3.3.2.1. If the main parachute malfunctions, the Director of Flight Operations (DFO) will assess the parafoil health. If the parafoil flight is stable and predictable a MAR will be attempted. Otherwise, the SRC will continue to ground impact and the MAR helicopters will do a damage assessment. If there is no damage, the MAR helicopters will proceed with a recovery. If there is damage, then Oscar will secure the area until the NASA Payload and Curation teams can arrive at the site to assess recovery requirements. 1.3.3.2.2. If the MAR fails and the SRC continues to ground impact, the MAR helicopters will do a damage assessment. If there is no damage, the MAR helicopters will proceed with a recovery. If there is damage, then Oscar will secure the area until the NASA Payload and Curation teams can arrive at the site to assess recovery requirements. 1.3.3.2.3. If the drogue chute fails then all helicopters will participate in a search for the downed SRC. Once the SRC is located all helicopters will depart the area except Oscar who will take charge of the impact area (i.e., secure the area) until the NASA Payload and Curation teams can arrive at the site to assess recovery requirements. Note: All of the preceding operational descriptions are abbreviated from the detailed plans contained in the Genesis Crew Training and Procedures Manual (Tab 4) and Genesis Mid-Air Retrieval Mission Plan (Tab 4). These documents also provide detailed descriptions of the mechanical systems involved in the operation. Please refer to these documents for a more detailed description of the processes and procedures that will be used for training and the actual recovery.
Genesis Mission Sample Return Contingency Communications Team Operations Plan	Table 1. Re-Entry Contingency Types 2. An off-nominal flight profile results in impact of the SRC and perhaps the spacecraft bus onto the UTTR or its Region of Influence (ROI). This type of contingency will continue to be largely handled by elements of the Genesis Recovery Team and the UTTR related units supporting them. However, this may require involvement of the Contingency Response Team to notify local civilian authorities through FEMA contacts to identify and secure areas believed impacted by the spacecraft until arrival of the Recovery Team. Appendix B: NASA Public Affairs Information for Use in Contingency Commentary Drogue Chute and/or Parafoil Do Not Deploy The capsule's drogue parachute deploys about 2 minutes after it enters Earth's atmosphere when it is over the Utah Test & Training Range. In a best-case scenario, the deployment may be visible on-camera. The purpose of the drogue chute is primarily to stabilize the capsule; slowing it down is a secondary purpose. A contingency could take any of several forms – the drogue chute could shred but function at least partially, or it may fail altogether. In some scenarios, the drogue chute may not deploy properly, but the parafoil could still deploy and function. Any contingency would be visible either on optical trackers or on radar, which will be able to monitor the speed of the capsule. If no chutes deploy, the capsule will hit the ground at about 100 mph. If only the drogue deploys, the final speed would be 60-70 mph. If the parafoil deploys, the final speed is about 30 mph. The chase helicopters remain on the perimeter of the target ellipse until confirmation of parafoil deployment, after which they move in to capture it. In the event of a contingency, the helicopters would remain outside the ellipse until radar confirms the capsule has reached the ground, after which the helicopters would go in to locate the capsule.

Genesis Mishap Investigation Board

Fault Tree Closeout Record

Date: 11/15/04

FAULT TREE ELEMENT(S):

2.12 Avionics Shorted

SCENARIO:

After the battery depassivation, the avionics boxes shorted out internally resulting in insufficient current to fire the drogue mortar initiators.

ARGUMENTS FOR:

Avionics boxes shorted out internally as a result of battery depassivation.

ARGUMENTS AGAINST:

See the detailed arguments below.

DEDUCTIONS:

Post impact inspection and continuity testing of the Box A avionics Relay and EST cards revealed no power to ground shorts. Functional testing of the Box A EST card proves there are no internal avionics shorts of any kind within EST card S/N 001. Thus, at least one of the two Avionics Boxes was functional with no internal shorts.

Post impact inspection and continuity testing of the Box B avionics cards revealed no power to ground shorts on the relay card. Power to ground shorts were found on the EST Card however there was no visual evidence of these shorts. Lack of such evidence is suggestive that the measured power to ground shorts were due to crash damage.

CONTRIBUTION OF THIS BLOCK TO FAILURE IS:

N-Not Credible

Source of Data:	**Check Applicable**	**Description**
Telemetry:	☐	
Photography/Video:	☐	
Physical Evidence:	☒	Genesis RFA #44 Internal Inspections of the Flight Avionics Boxes
Test:	☒	GN_RFA-114, *SRC Avionics (A) EST Board Characterization*
Analysis:	☐	
Other:	☒	LMA Dwg No 915A1601001 Event Sequence Timer Schematic Diagram, LMA Dwg No 915A1603001 SRC Avionics Relay Board Schematic Diagram, LMA Dwg No 915A1602001 Low Speed Interface Motor Schematic Diagram, MIL-PRF-30017F Relays, Electromagnetic, Established Reliability, Genesis ATLO GN_3S40, SRC Return Avionics Test, Pretest Checklist Date 6-27-00, Genesis ATLO GN_3S40_A, SRC Return Avionics Test, Pretest Checklist Date 7-21-00

Prepared by: Jerry Dalton/Avionics/818-393-2398

MIB Approval:

G. Internal Inspections of Flight Avionics Boxes

G.1 AVIONICS BOX A (GOOD)

A continuity test was performed at the box level on the power inputs for Avionics Box A. Continuity was measured from power-to-ground and power-to-power for all power nets accessible from the external connectors. There were no shorts. Continuity was also measured at the box level from each separate pyro output-to-ground and from each separate pyro output-to-pyro output. There were no shorts.

Avionics Box A was disassembled for card inspection. Circuit card inspection revealed the following:

Relay Card S/N 001. The relay card was in very good condition (Figure G-1), showing very little visible damage. P1 was cracked but appeared functional (Figure G-2). There was no sign of overstress that would indicate a relay card power-to-ground short. There was no discoloration, delaminating, or burning of the PCB or conformal coating.

A card-level continuity test was performed. Continuity was measured from power-to-ground and power-to power-for all primary power nets. There were no shorts.

Relay state was checked by probing test points and relay pins with a digital multimeter set to measure continuity. The results were inconclusive and suggestive of internal relay damage. Relays are considered fragile—LMA's relay failure analyst indicated that relays can be damaged by dropping them a few feet to the bench. The relay damage was most likely due to impact. Refer to MIL-PRF-39017F for detailed relay specifications.

EST Card S/N 001. The EST card was in good condition. A slight deformation in the center of the board was observed, estimated to be about 0.062 inches. Connector J2 had been sheared off the board (Figure G-3), but there was no other visible damage. There was no sign of overstress that would indicate an EST card power-to-ground short, such as discoloration, delaminating, or burning of the PCB or conformal coating.

There was no indication of overstress to the secondary voltage regulators. The 0.375-A UHF Beacon power fuse and 5-A GPS power fuse appeared normal, with no visible evidence of damage or overstress. Continuity tests verified the integrity of the fuses.

A card-level continuity test was performed. Continuity was measured from power-to-ground and power-to-power for each primary and secondary power net. There were no shorts.

Continuity was also measured at the card level from each separate pyro output-to-ground and from each separate pyro output-to-pyro output. There were no shorts.

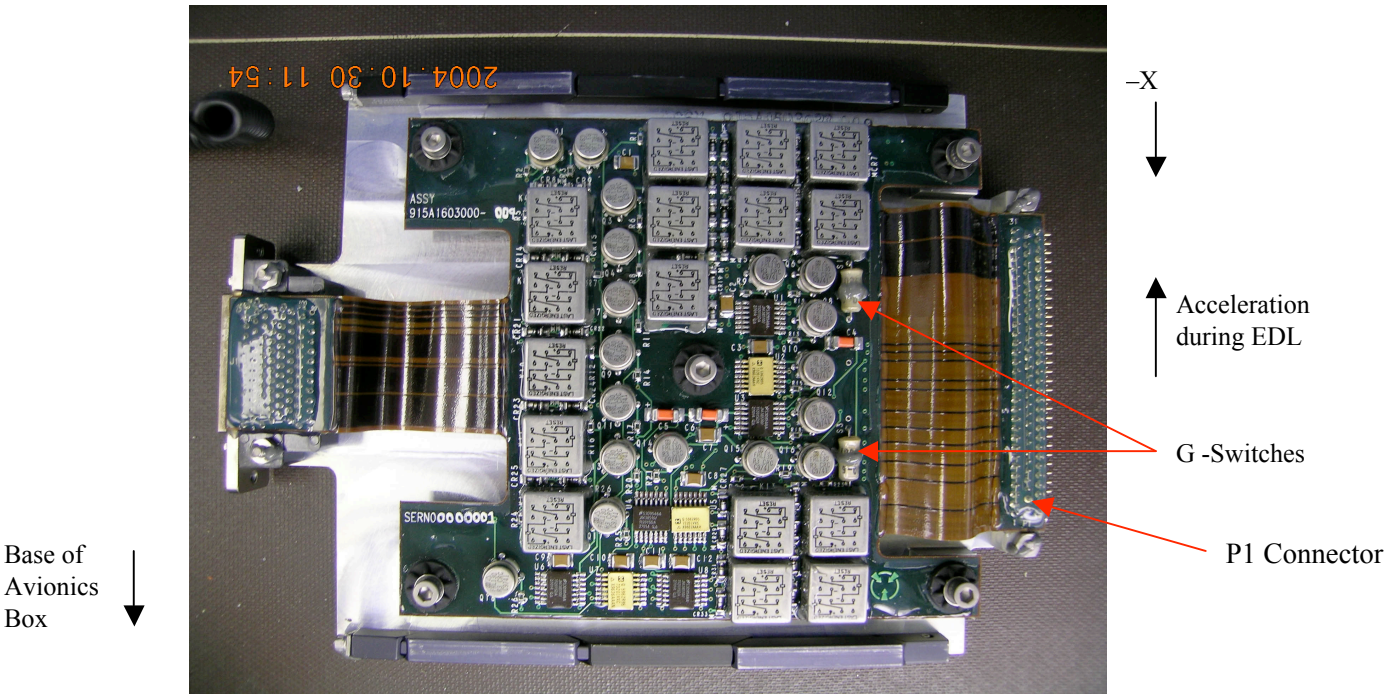

Figure G-1. Avionics Box A Relay Card SN 001

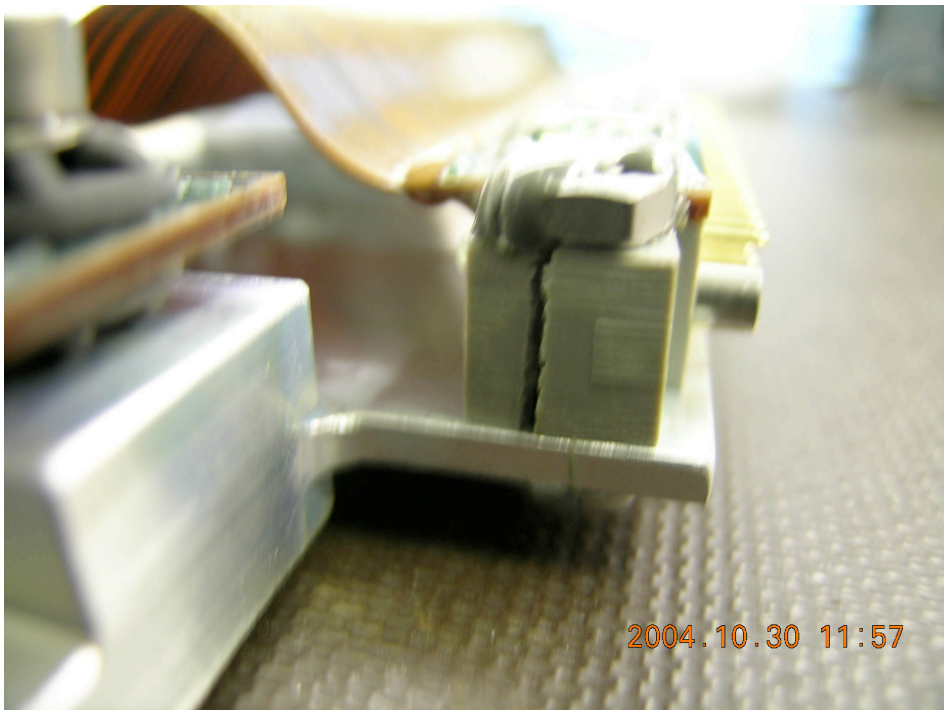

Figure G-2. Cracked P1 Connector on Relay Card SN 001

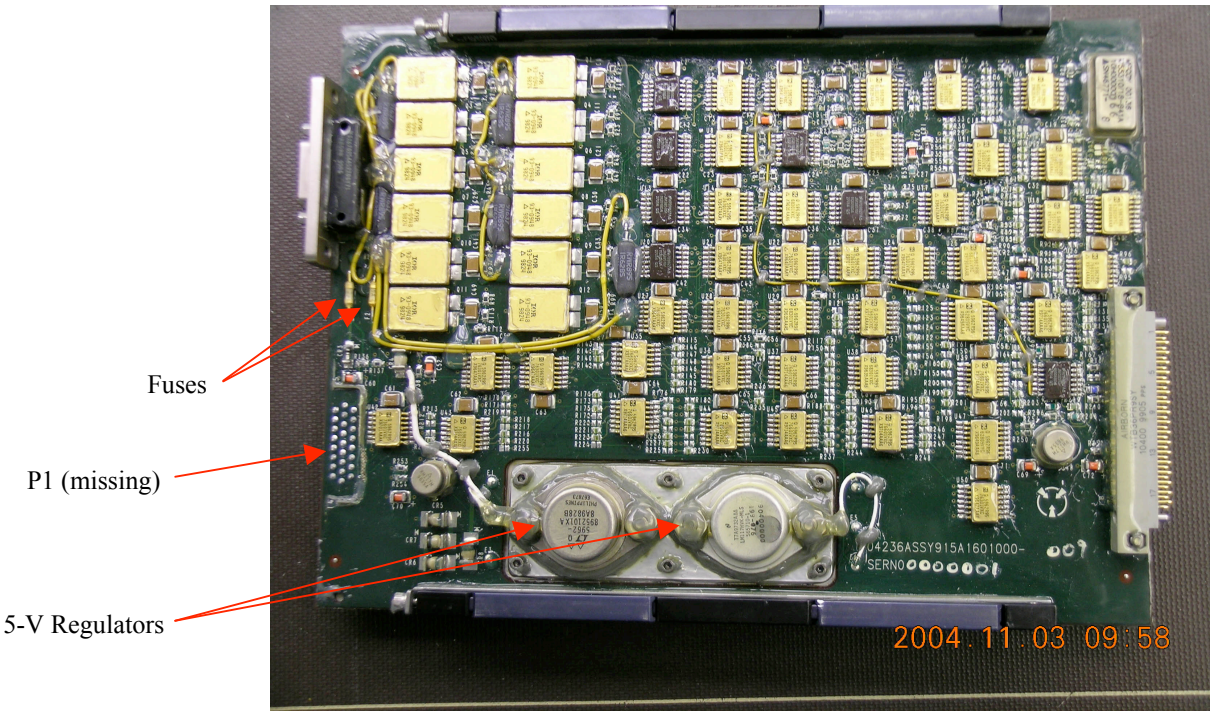

Figure G-3. Avionics Box A EST Card SN 001

MDE Card S/N 002. The MDE card was in very good condition (Figure G-4). A slight deformation of the board was observed, less than the EST. The two 5-A 28-V spacecraft power fuses appeared normal with no visible evidence of damage or overstress. Continuity tests verified the integrity of the fuses. The hybrid DC/DC secondary voltage converter appeared normal with no evidence of damage or overstress.

G.2 AVIONICS BOX B (SMASHED)

The connectors and the backplane on Avionics Box B were extensively damaged. Box-level continuity testing was not possible on Box B.

Avionics Box B was disassembled for card inspection. Circuit card inspection revealed the following:

Relay Card S/N 002. The relay card was in bad condition. There was obvious physical damage to the board and relays (Figure G-5). However, there was no sign of overstress that would indicate a relay card power-to-ground short. There was no discoloration, delaminating, or burning of the PCB or conformal coating.

A card-level continuity test was performed. Continuity was measured from power-to-ground and power-to-power for all primary power nets. There were no shorts.

Relay state was not checked because of obvious physical damage to the relays.

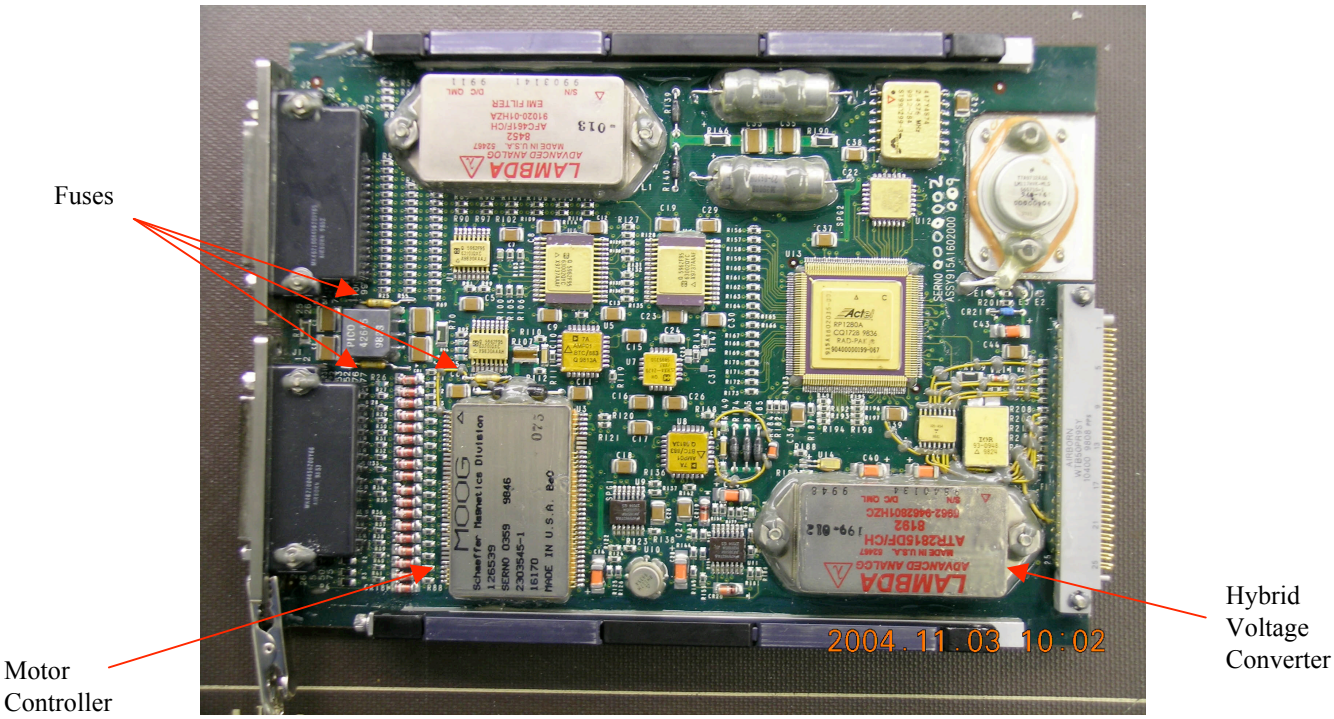

Figure G-4. Avionics Box A MDE Card SN 002

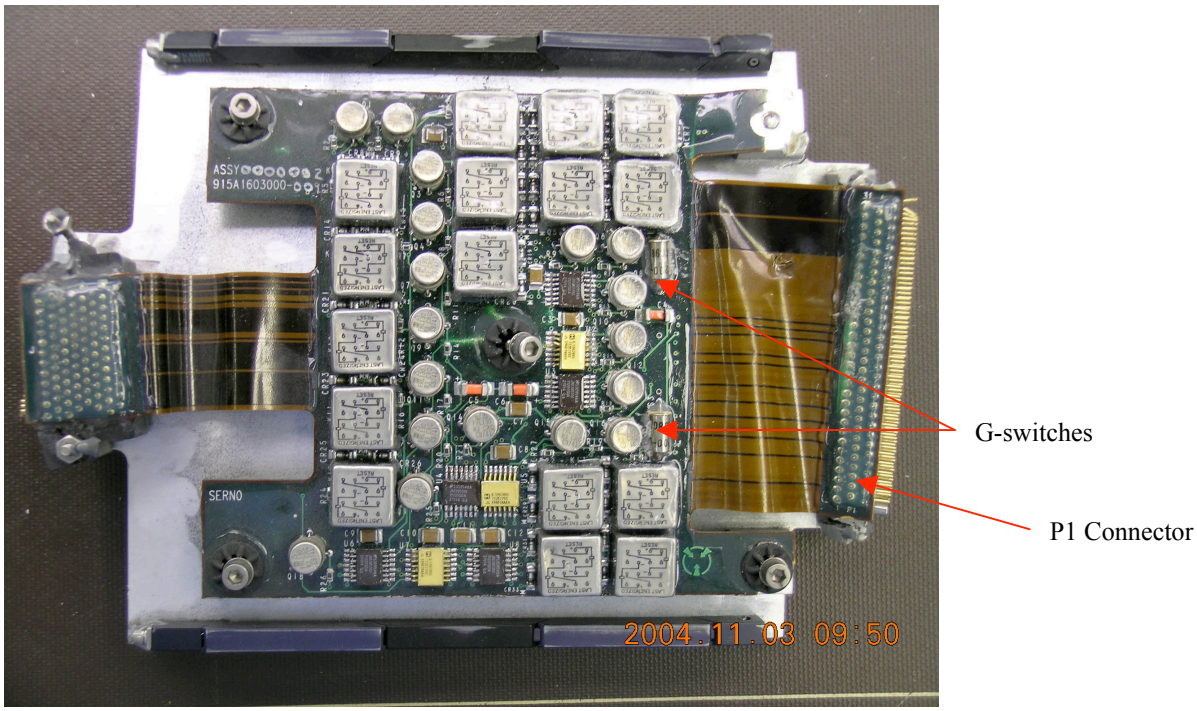

Figure G-5. Avionics Box B Relay Card SN 002

EST Card S/N 002. The EST card was heavily damaged. The connectors were smashed and badly deformed; there was extensive damage to the PWB near one corner (see Figures G-6 and G-7). However, there was no visible sign of overstress that would indicate an EST card power-to-ground short, such as discoloration or burning of the PCB or conformal coating.

There was no indication of overstress to the secondary voltage regulators. The 0.375-A UHF Beacon power fuse and 5-A GPS power fuse appeared normal with no visible evidence of damage or overstress. Continuity tests verified the integrity of the fuses.

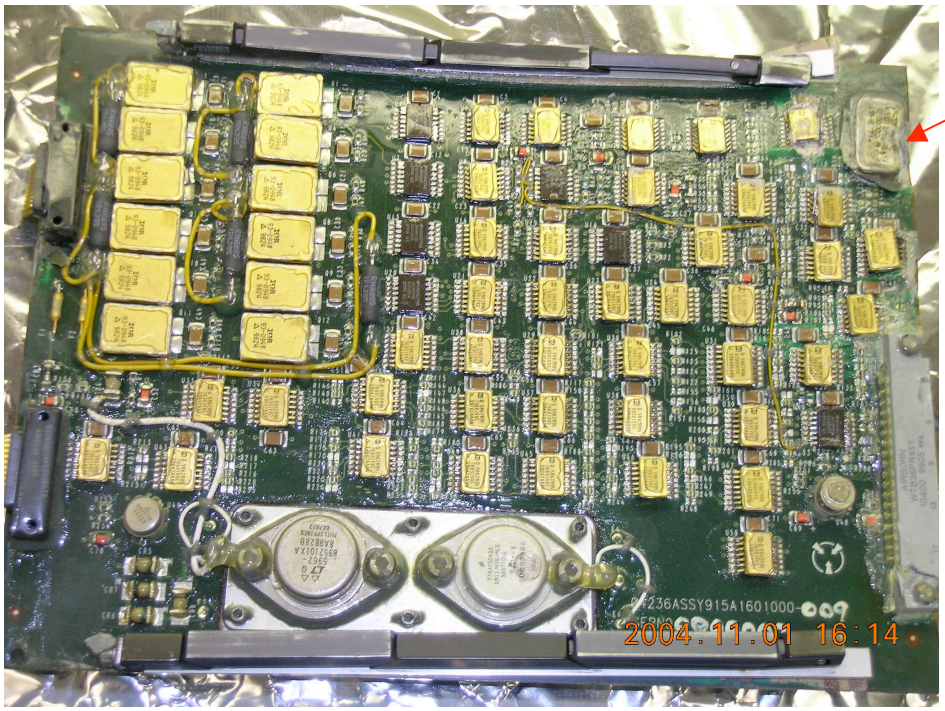

Note physical damage in this corner.

Figure G-6. Avionics Box B EST Card SN 002

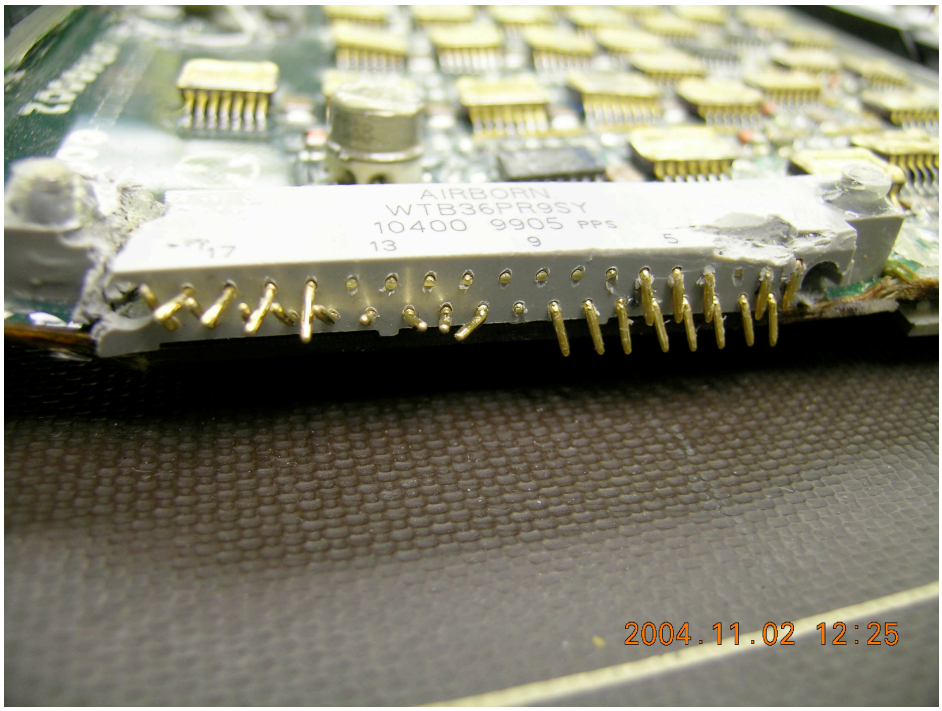

Figure G-7. EST SN002 P1 Connector

Damage to the connectors prevented their use for card-level continuity tests; therefore, testing was performed by probing board solder joints through the conformal coating. Primary and secondary ground nets were shorted to ground and to each other. Pins touching each other on the smashed connector may have been responsible for the shorts (Figure G-8). If these shorts had occurred while the circuit was powered, there would have been considerable heat generated. However, the lack of visual evidence such as discoloration, burning, or melting of the PCB suggests the power-to-ground shorting of the EST card was due to crash damage and not an in-flight failure.

Pyro output continuity testing could not be performed because of connector damage.

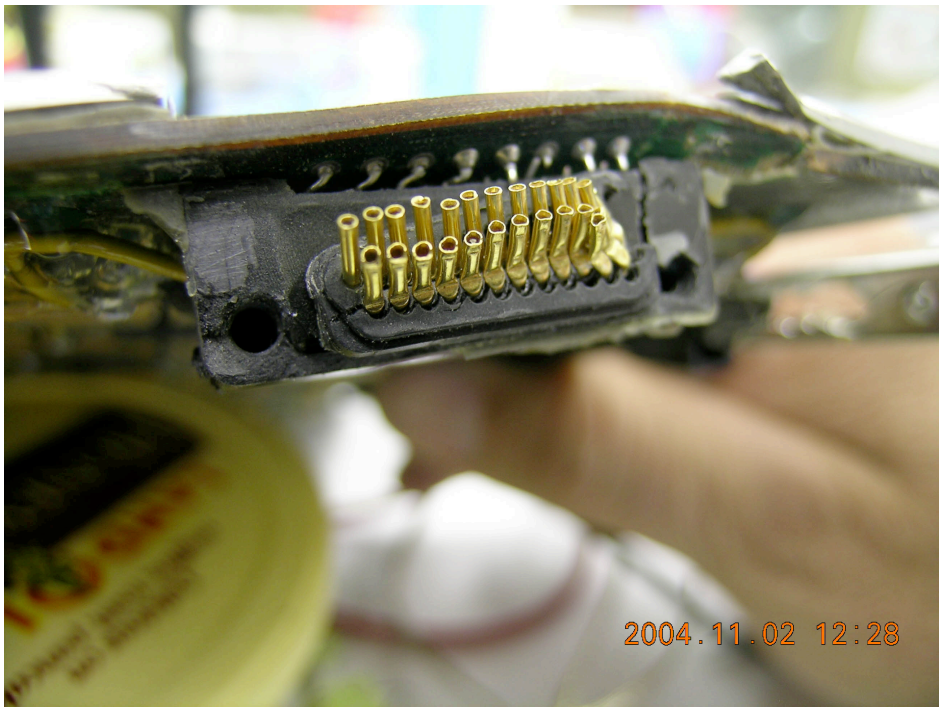

Figure G-8. EST SN 002 J2 Connector

MDE Card S/N 003. The MDE card was in bad condition, with extensive damage to the components and board near the P1 connector (Figure G-9). However, the two 5-A 28-V spacecraft power fuses escaped damage and appeared normal, with no visible evidence of damage or overstress. Continuity tests verified the integrity of the fuses.

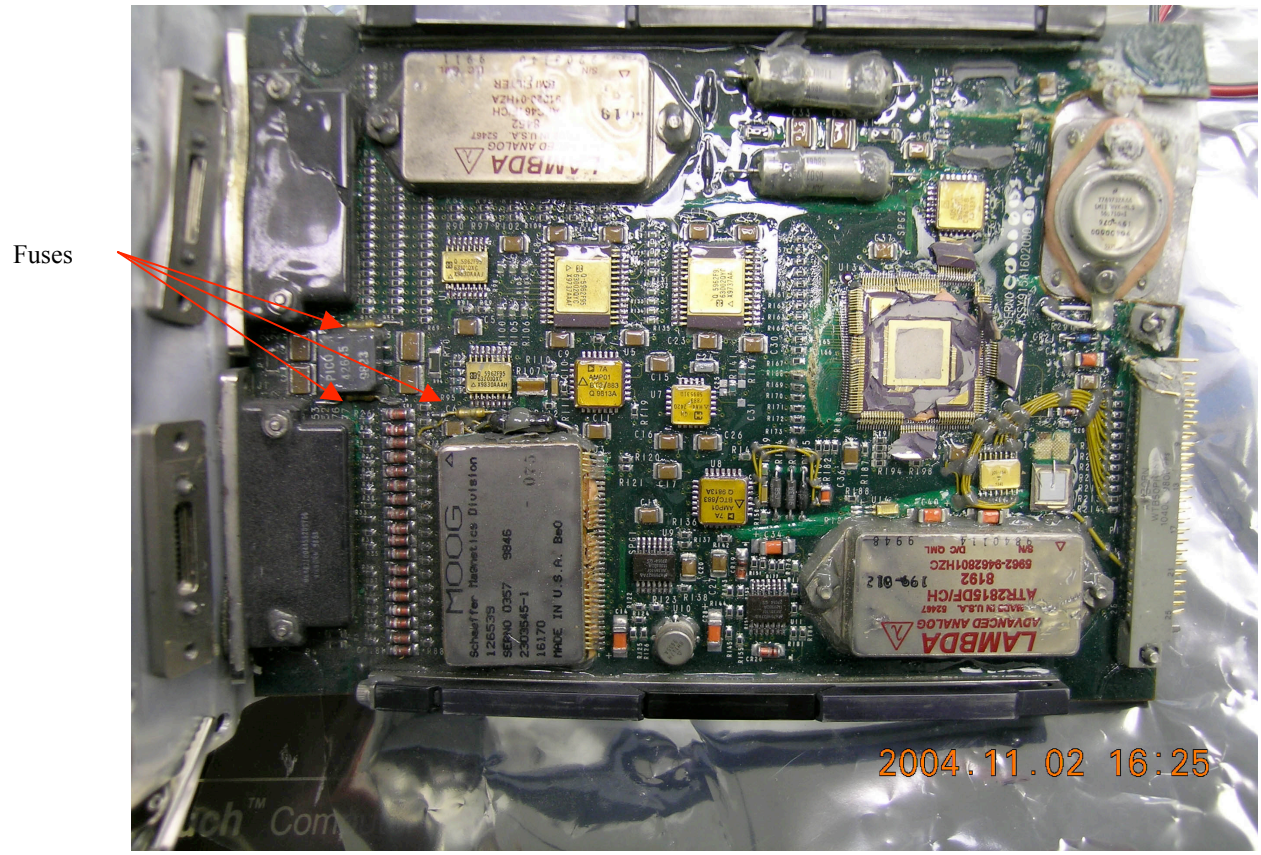

Figure 9. Avionics Box B MDE Card SN 003

G.3 PRE-LAUNCH SYSTEM TESTING

Two separate hardware test sets were used for system testing; GN-3S342, a.k.a. the "suitcase" test set and GN-3S340, the ATLO test set. The "suitcase" test set was used after environmental testing and at Cape Kennedy. Although performed closer to launch than the ATLO tests, the "suitcase" tests were not useful for verifying the functionality of both avionics boxes, because the test reports do not state which box (1 or 2) was tested.

During the ATLO phase, SRC Avionics was tested to verify SRC return avionics performance (see reference documents 6 and 7, Genesis ATLO *SRC Return Avionics Test Reports* for details). The ATLO test results provide verification that both avionics boxes were functional. The latest ATLO test report, ATLO GN_3S40_A, *SRC Return Avionics Test*, contains a pretest checklist dated July 21, 2000 (i.e., the verification test took place on or after that day).

G.4 POST-IMPACT FUNCTIONAL TEST OF EST CARD

The following is based on information obtained during test procedure GN_RFA-114, SRC Avionics (A) EST Board Characterization.

The almost pristine condition of EST S/N 001 from Box A facilitated a powered card-level functional test of the EST using the LMA Genesis SRC Avionics test set (see RFA #114). The relay card was not tested because of (suspected) post-impact damage to the relays. The test set was checked out using the EDU EST card. Connector P2 of the EST card was replaced and the card was tested.

EST S/N 001 successfully completed two sets of pyro signal timing and output voltage tests. There was one parametric failure—drogue chute deploy was 15 milliseconds late (test limit is 5600 ms ± 150 ms) on one of the timing tests. The delay may have been due to the test equipment, perhaps a slow relay, rather than the card as all subsequent timers within that timing set exhibited approximately the same delay (the test rack had been in storage for a number of years.) See following table for a summary of the detailed results of the timing tests.

Table G-1. EST SN 001 Summary of Card-Level Functional Test Timing Results (ms)

		Drogue Deploy 5.6 ± .15 sec.	Drogue Harness Cut [1] 80.6 ± 0.5 sec.	Main Chute Deploy 259.2 ± 0.5 sec.	UHF/GPS Beacons 261.4 ± 0.5 sec.
Test # 1	Drogue only	5,737	N/A	N/A	N/A
	Simultaneous G-signals	5,744	80,739	259727	261426
	Skewed G-signals #1	5,679	80,674	259,662	N/A
	Skewed G-signals #2	5,770 [2]	80,765	259,753	261,453
	Deploy main w/pressure switch	N/A	N/A	103,195	N/A
Test # 2	Drogue only	5,716	N/A	N/A	N/A
	Simultaneous G-signals	5,741	80,736	259,724	261,424
	Skewed G-signals #1	5,690	80,685	259,763	N/A
	Skewed G-signals #2	5,720	80,715	259,703	261,403
	Deploy main w/pressure switch	Stop Test			

N/A = Not Applicable, data not collected for this step.

[1] One of two drogue harness circuits has open timing resistors on an input to one 'AND' gate.

[2] Parametric failure; test limit = 5,600 ms ± 150 ms.