Paper AAS 04-102

THE GEOSTORM WARNING MISSION : ENHANCED OPPORTUNITIES BASED ON NEW TECHNOLOGY

John L. West

14th AAS/AIAA Space Flight Mechanics Conference

Maui, Hawaii, February 8-12, 2004

AAS Publications Office, P.O. Box 28130, San Diego, CA 92198

THE GEOSTORM WARNING MISSION: ENHANCED OPPORTUNITIES BASED ON NEW TECHNOLOGY

John L. West[†]

The Geostorm Warning Mission is a potential future National Ocean and Atmospheric Administration (NOAA) mission with the objective of obtaining solar storm warning data from a satellite positioned at an unnatural station slightly displaced from the Earth-Sun line at or nearer to the Sun than 0.98 AU inside the Earth's natural L1 point at 0.993 AU. The satellite would achieve this unnatural station by merging solar sail and small satellite technology.

Utilizing technology available at the time, the most recent formal mission proposal to perform the Geostorm Warning Mission, and the only formal mission proposal to date, the Jet Propulsion Laboratory's (JPL) Space Technology-5 (ST-5) proposal developed in response to the NASA New Millenium Program's (NMP) ST-5 call in 1999, could enable a factor of 2 increase in warning time compared to a conventional satellite stationed at the L1 point. This increase in warning time, which required artificially displacing the L1 equilibrium point from 0.993 AU to 0.984 AU, was achieved utilizing a sail concept developed by L'Garde, Inc. of Tustin, CA which utilized an inflatable UV-rigidized Kevlar boom and a sailcraft and sailcraft bus concept developed by Ball Aerospace Corp., Boulder, CO, in conjunction with JPL. The sail utilized 0.33-mil (8-micron) thick Kapton for the sail membrane material, and the sailcraft utilized a conventional monopropellant hydrazine propulsion subsystem for attitude control of the spin-stablized sailcraft vehicle. The overall sailcraft system thus designed could achieve beginning-of-life and end-of-life sailcraft loadings of 42.1 and 36.3 grams/m^2, respectively, sufficient to achieve an operational station location between 0.984 and 0.983 AU.

While not selected by NASA for flight demonstration, the ST-5 sailcraft concept, and a subsequent sailcraft concept proposed by JPL in response to the NMP ST-7 proposal call in 2001, effectively highlighted the performance potential and mission-enabling capabilities of solar sails, helping to galvanize support for the continuing development of sails under NASA's 2002-launched, NASA Marshall-Space-Flight-Center (MSFC)-managed, In-Space Propulsion Technology (ISPT) Program. This new NASA Program has the objective of developing and ground demonstrating emerging new propulsion technologies that show promise for substantially enhancing NASA mission opportunities and mission performance. In specific, the program is designed to bring propulsion technologies currently at a technology readiness level (TRL) of 3 on NASA's 10-level readiness scale to 6. Early work under this new NASA Program has already yielded promising results for enhanced Geostorm Warning Mission performance, as this paper discusses.

What the early results of the ISPT Program show for Geostorm Warning Mission performance is the potential for ground demonstration within two years of an overall sailcraft loading of 9.48 g/m^2 compared to the 1999 ST-5 proposal's 42.1 g/m^2 at beginning-of-life and 36.3 g/m^2 at end-of-life. Sailcraft loadings of 9.48 g/m^2 can enable achievement of a stable equilibrium station at 0.974 AU, equivalent to an increase in warning time of nearly a factor of 4 compared to the factor of 2 for the 1999 ST-5 proposal compared to a conventional satellite stationed at the L-point. This enhanced performance is achievable principally through improvement in the sail areal density, through use of lower linear mass density booms, a thinner membrane, and increased sail area, with some new ideas pertaining to sailcraft vehicle system design also offering potential mass reduction and hence improved performance. The sail design uses a new inflatable boom design developed by L'Garde, Inc. with sub-Tg rigidization and very low sail stresses, that is, sail stresses << 10 psi. The sailcraft makes use of a unique Ball-Aerospace-Corp.-developed approach to sailcraft vehicle system design which uses a separable sailcraft carrier module to accommodate launch loads and provide sailcraft vehicle stabilization during post-launch sail deployment.

[†] John L. West, Jet Propulsion Laboratory, California Institute of Technology, 4800 Oak Grove Drive, Pasadena, CA 91109. Phone: (818) 354-2632, FAX: (818) 393-6871. E-mail: John.l.West@jpl.nasa.gov.

INTRODUCTION

Solar sail technology can enable heretofore nonviable space mission concepts and provide a lower-cost alternative for performing future space missions with high delta-V demands. The technology makes use of the sun's inexhaustible supply of photons to enable missions with non-Keplerian orbits and those that offer unique vantage points. Such missions can address a broad range of NASA needs and goals as well as the needs and goals of other federal agencies such as the National Oceanic and Atmospheric Administration (NOAA) and Department of Defense (DoD) with many of these missions emerging from the needs of the Sun-Earth Connection (SEC) theme of the NASA Office of Space Science. Example missions include the Geostorm Warning Mission, the subject of this paper, Solar Polar Imager, and Heliopause Explorer.

The Geostorm Warning Mission is a mission that would provide real-time monitoring of solar activity. It would operate inside the Earth's L1 point and increase the warning time for geomagnetic storms compared to a vantage point closer to the Earth. The concept for the Geostorm Warning Mission originated in the summer of 1996 after NOAA asked the Jet Propulsion Laboratory (JPL) whether an improvement in the warning time available from a satellite positioned at L1 could be achieved through the application of emerging new technologies in solar sails, inflatable structures, and microspacecraft. NOAA's principal motivation was to find an inexpensive, reliable way to continue the delivery of storm warning data to its commercial and DoD customers after the expected end-of-life of the Advanced Composition Explorer (ACE) spacecraft in 2000-2002. The ACE spacecraft is a NASA scientific spacecraft then scheduled for launch in 1997 which, since its launch at that time, has been positioned at L1 and through agreements with NOAA, DoD, and NASA, among others, provided continuous storm warning data for the first time.

The results of the ensuing 1996 JPL study reported in References 1 and 2 showed a viable mission/satellite system concept to provide the desired improvement in storm warning time. The satellite could utilize small satellite technology merged with a space-inflatable solar sail to take advantage of solar photon pressure to permit the satellite to maintain an unnatural station near the Earth-Sun line at ~0.98 AU, well inside the L1 point at ~0.993 AU. So positioned, the satellite could provide a factor of 3 increase in warning time over the 30 minutes to 1 hour available at L1. The satellite could be based on conventional technology, and the sail could utilize a space-inflated, rigidizable structure. Subsequent updates to the work documented in References 1 and 2, reported in References 3 and 4, carried the original 1996 work several important steps further, adding detail to the design of both the sailcraft bus and sail and refining the sailcraft performance estimates to a more achievable factor of 2 increase in warning time while at the same time validating the original Geostorm system concept and its estimated costs. This latter work was sponsored by NASA's New Millennium Program (NMP) in the context of a competition for NASA's FY '00 Space Technology 5 (ST-5) technology flight validation opportunity, leading to a formal project proposal presented to NASA Headquarters by JPL in the summer of 1999 for a project known as the Sub-L1 Sail Project. That mission, as then envisioned, offered a logical follow-on inflatable structure flight demonstration to the NASA Inflatable Antenna Experiment (IAE) completed in May 1996, taking that demonstration several critical steps further in demonstrating both the deployment of a substantially larger structure than demonstrated on IAE and in-flight structural

rigidization. At the same time, the mission would have served an important national need in providing solar storm warning alerts to commercial, DoD, and NASA customers.

The work described herein revisits the 1999 NMP ST-5 Sub-L1 Sail Project Reference 4 sailcraft design to document how subsequent improvements in sail propulsion subsystem technology and sailcraft vehicle system design can enhance mission performance for the Geostorm Warning Mission. The ideas reported on derive principally from work sponsored at L'Garde, Inc., Tustin, CA, the Ball Aerospace Corp, Boulder, CO, the NASA Langley Research Center (LaRC), and JPL by NASA's 2002-launched, NASA Marshall-Space-Flight-Center (MSFC)-managed, In-Space Propulsion Technology (ISPT) Program.

GEOSTORM WARNING MISSION REQUIREMENTS AND DESIGN PRINCIPLES

Figure 1 shows the key design requirements and principles which guided the mission and vehicle system design for the 1999 NMP ST-5 Sub-L1 Sail Project proposal with these requirements addressing, at the time, both the needs of NASA for flight validation of sail technology to enable future NASA missions and the needs of two other federal agencies, NOAA and DoD, for acquiring operational space weather data. Figure 1 also shows how these original requirements compare with NOAA's most-recently issued requirements for operational solar wind data, as documented in Reference 5. What this comparison shows is new, explicit NOAA emphasis on continuous data flow, low data latency, and long length of service with warning time equivalent to that of a satellite positioned at L1 characterized as the minimum acceptable standard. This keeps the door open to "conventional" missions at L1 while not closing the door to mission concepts that might use unconventional technologies like solar sails or electric propulsion to create artificial equilibrium points closer to the sun than L1 to meet NOAA's operational solar wind data needs.

CANDIDATE TECHNOLOGIES HAVING MISSION PERFORMANCE ENHANCEMENT POTENTIAL FOR THE GEOSTORM WARNING MISSION

Since the dawn of the space age, new space technologies offering lower mass, longer life, and improved reliability have offered the most potential benefit to future missions and the Geostorm Warning Mission in specific and solar sail missions in general are no exception. Technologies offering these advantages can be mission enabling, enabling the use of smaller, affordable launch vehicles and mission lifetimes that justify user investment in the missions. What is different about missions that might benefit from the use of very large structures in space, however, as a sail-propelled Geostorm Warning Mission would, is the extremely high value they place on mass-efficient structures and, for sail missions, on space-suitable thin-film membranes. The reason for this is obvious: for missions requiring large space structures most of the mass is in the structure and therefore most of the potential mass savings lies in the structure. This is the principle motivation for efforts to explore the potential of space inflatable structures and other novel approaches to designing and fabricating highly mass-efficient, self-deploying, large space structures for sail applications.

Key Mission Design Requirements and Principles	
NMP ST-5 Sub-L1 Sail Project Proposal (1999)	**Current (2003)**
• Ensure first sail project success defined as meeting the flight validation objectives	• Not applicable
• Minimize risk of cost overruns	• Same
• Minimize total project cost	• Same
• Meet user instrumentation measurement requirements key of which are magnetic field vector knowledge to 1° and 100 bps minimum downlink data rate	• Magnetic field vector knowledge, minimum downlink data rate unspecified
• Avoid false alarms and missed events	• Not addressed
• Provide for launch after completion of the Advanced Composition Explorer (ACE) Mission (2000-2002)	• Same
• Provide for achievement of mission goals in presence of sail failure	• Not applicable
• Serve as a proof-of-concept for subsequent, additional, operational storm warning missions	• Not applicable
• Provide for 18-month operational mission life (3-year goal)	• 3-7 years
• Provide storm warning time better than the ~30 min available from a satellite positioned at L1	• L1 warning time minimally acceptable
• Not specified	• Continuous data flow, 24 hours per day, 7 days per week
• Not specified	• Each measurement broadcast 1 min after measurement completion

Figure 1 Key Mission Design Principles and Requirements

Also important to note, specifically for sail missions, is the premium they place not only on technologies and novel vehicle system design concepts to reduce launch mass but also to eliminate mass post launch. This is because sail missions can continue to benefit from the staging principle after completion of the ballistic portion of the launch. This makes vehicle system design approaches that provide for jettison of the hardware necessary to deploy a sail in space highly valuable. It also places a premium on vehicle system design engineering that takes into account the most mass efficient way to perform all required post-launch spacecraft functions, particularly those that involve propulsive events and attitude control and stabilization. This is because, although sail technology may offer the possibility of propellantless propulsion and attitude control, many potential sailcraft mission scenarios may benefit from, or even require, jettison of the sail at some point in the mission, necessitating the spacecraft carry a conventional capability for attitude control and propulsive events after sail jettison. This means adding the extra mass required to implement a propellantless method for attitude control, such as vanes or a gimbaled-mass-on-a-boom system, during the sail-attached portion of the mission to save propulsion subsystem mass might not save mass for the overall sailcraft vehicle.

Figure 2 provides a summary of some of the technologies and design approaches having the potential to enhance Geostorm sail mission performance as well as qualitative and quantitative assessments of the potential of each to enhance performance. The table shows most of the potential performance improvements lie in reducing the mass of the sail propulsion subsystem and, to a lesser extent, in reducing the mass of the sailcraft bus, principally through the use of a propellantless method for attitude control, and, to a still-lesser extent, in reducing the mass of the payload/instrumentation. It should be noted

Technologies and Design Approaches with Potential to Enhance Geostorm Warning Mission Performance					
		Enhancement Potential[1]			
			Quantitative		
Sailcraft Elements	Candidate Technologies/ Design Approaches	Qualitative[2]	Mass, kg	Areal Density, g/m^2	% Improve -ment
• Sailcraft Bus		Medium	30+	6+	16.6
– Structure and Mechanisms	– Vanes used, thruster boom mass eliminated. Requires vane mass addition penalty (See "Sail Propulsion Subsystem, Vanes")	Medium	12	2.2	6.6
– Power	– None specific	Low	< 1	< 0.2	0.5
– Command and Data	– None specific	Low	< 1	< 0.2	0.5
– Telecommunications	– None specific	Low	<< 1	<< 0.2	0.5
– Thermal Control	– None specific	Low	< 1	< 0.2	0.5
– Attitude Control	– See "Propulsion"	Low	< 1	< 0.2	0.5
– Propulsion	– Vanes used, monopropel-lant Hz propulsion subsystem eliminated	Medium	10	2	5.5
– Propellant / Pressurant	– Vanes used, propellant/ pressurant eliminated	Medium	10	2	5.5
• Sail Propulsion Subsystem (SPS)		High	40+	8+	22.0
– Booms/Structure	– Sub-Tg-impregnated-resin Kevlar inflatable booms	Low	2	0.4	1.0
– Membrane	– 2-micron-thick mylar	High	40	8	22.0
– Vanes	– Vanes (4), including actuators (4), actuator wiring, et al	N/A	(10)	(2)	(5.5)
– Jettisonable Elements	– Carrier module, including boom deployment battery/infrared (IR) heaters/et al	Low	< 5	1	2.7
• Payload/Instrumentation		Low	< 5	1	2.7
– Science/Operational Data	– None specific	Low	< 1	< 0.2	0.5
– Engineering					
• Standard Engineering Diagnostics	– None specific	Low	<< 1	<< 0.2	0.5
• Sail Deployment Diagnostics (Imagers, associated booms, wires, et al)	– Free-flying inspection system, deletion of in-situ system	Low	< 5	< 1	2.7

Notes: (1) Total sailcraft, compared to 1999 NMP ST-5 Sub-L1 Geostorm Sail Project Proposal sailcraft
(2) High: > 35 kg Medium : 10-35 kg Low: < 10 kg
( ) Indicates penalty

Figure 2 Technologies and Design Approaches with Potential to Enhance Geostorm Warning Mission Performance

the only propellantless method for attitude control explicitly studied in the effort reported herein is vane control, with the potential to save sailcraft system mass as reported in Figure 2. Other propellantless methods, such as gimbaled-mass-on-a-boom or sail-panel-shifting systems (to provide two axes of control) merged with some type of conventional propulsion or other means to provide for the third (roll) axis of control, are yet to be studied. It should also be noted, very importantly, that what the table doesn't show is how much more important to improved sailcraft performance than simple item-by-item

replacement of sailcraft elements with lower mass elements, or the use of propellantless attitude control, is the simple increase in sail area, and attendant decrease in sail propulsion subsystem aeral mass density, made viable by the availability of acceptably strong, lower-linear-mass-density booms and the capability to fabricate booms with thinner, lighter membranes, as discussed in more detail later in this paper.

MISSION PERFORMANCE COMPARISON: "OLD" 1999 NMP ST-5 SUB-L1 SAIL PROJECT PROPOSAL GEOSTORM SAILCRAFT DESIGN VS A "NEW"-TECHNOLOGY-BASED GEOSTORM SAILCRAFT DESIGN

1999 NMP ST-5 Sail Project Proposal Geostorm Sailcraft Performance and Design

The 1999 NMP ST-5 Sub-L1 Sail Project proposal Geostorm sailcraft could enable a factor of 2 increase in warning time compared to a conventional satellite stationed at the L1 point. This increase in warning time, which required artificially displacing the L1 equilibrium point from 0.993 AU to 0.984 AU, was achieved utilizing a sail concept developed by L'Garde, Inc. of Tustin, CA which utilized an inflatable UV-rigidized boom and a sailcraft and sailcraft bus concept developed by Ball Aerospace Corp., Boulder, CO, in conjunction with JPL. The overall sailcraft system could achieve beginning-of-life and end-of-life sailcraft loadings of 42.1 and 36.3 grams/m2, respectively, sufficient to achieve an operational station location between 0.984 and 0.983 AU. Figures 3, 4, and 5, drawn from Reference 4, show, respectively, the overall sailcraft configuration, the sailcraft bus, and the sailcraft bus hardware layout. The two paragraphs that follow describe the design's key features, and Reference 4 documents the design in detail.

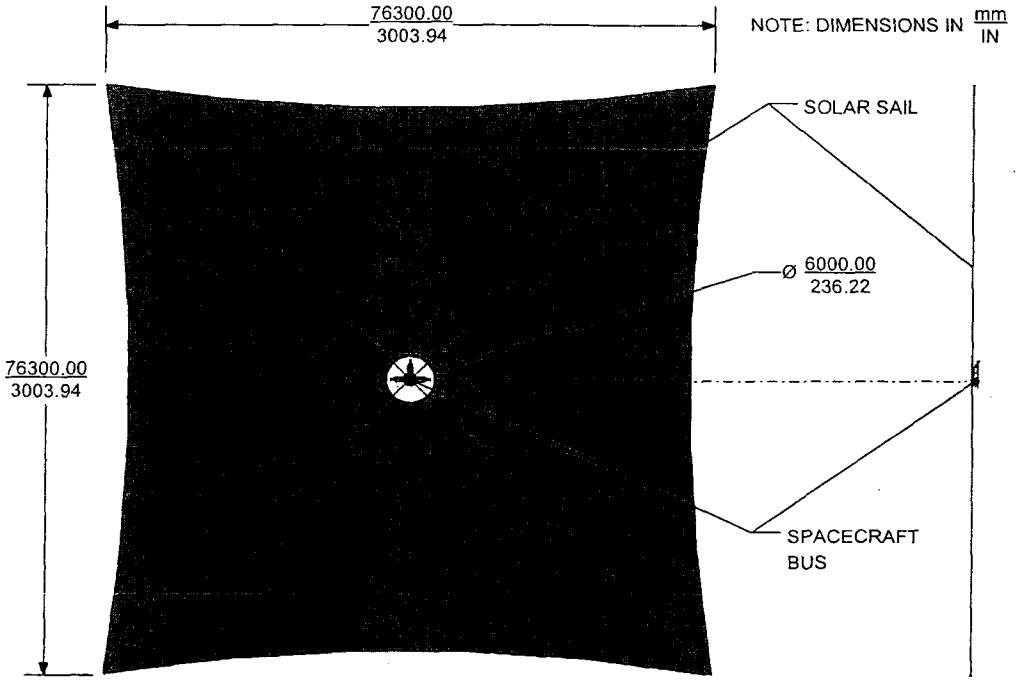

Figure 3 NMP ST-5 Geostorm Sailcraft Operational Configuration

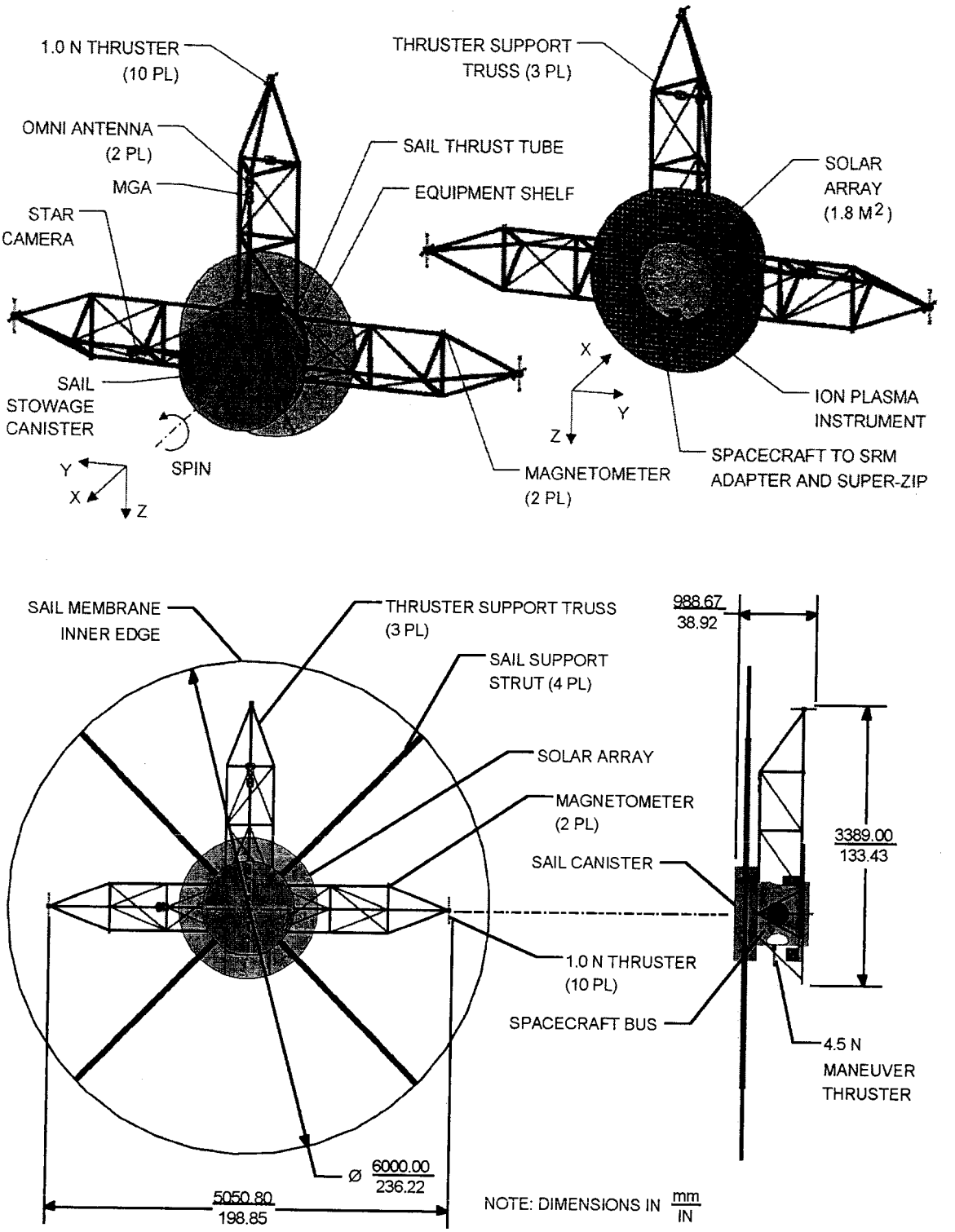

Figure 4 NMP ST-5 Geostorm Sailcraft Bus

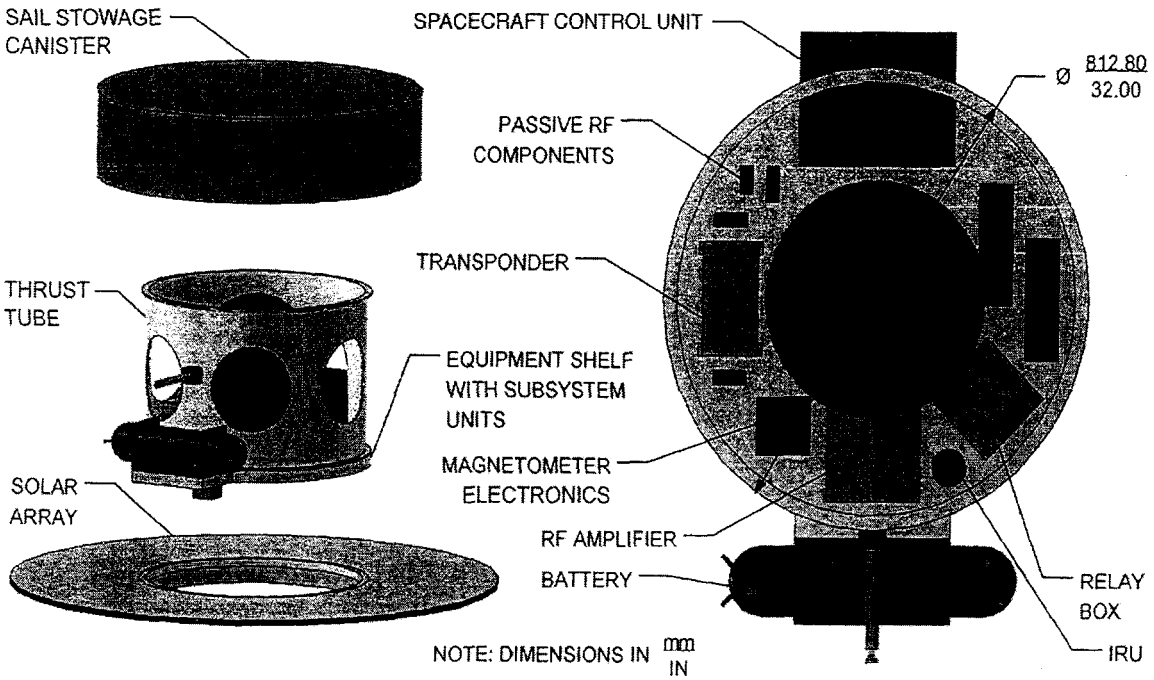

Figure 5 NMP ST-5 Geostorm Sailcraft Bus Hardware Layout

Sail Design. The 1999 NMP ST-5 Geostorm sail design utilized UV-rigidized, Kevlar, 4.5-mil-wall-thickness, inflatable struts, a 0.33-mil (8-micron) thick Kapton sail membrane, and a jettisonable stowage canister and inflation system. The total launch mass of the sail, or Sail Propulsion Subsystem (SPS), was 78.7 kg, including 7 kg of jettisonable elements, making the flight or operational mass of the SPS 71.7 kg. The jettisonable element mass included 5 kg for the stowage canister and 2 kg for the inflation system. The boom linear mass density for the tapered 8 cm-diameter boom at the base and 2.5-cm diameter boom at the tip was 41.1 g/m. The criteria used in the selection and design of this sail for the ST-5 mission, which could also form the basis for the design and selection of a sail for any mission, are shown in Figure 6, drawn from Reference 4.

Sailcraft Vehicle System Design. The ST-5 Geostorm sailcraft consisted of a sailcraft bus, solar sail, sail stowage canister, and a three-instrument payload. The sailcraft employs spin stabilization for attitude control, utilizes conventional monopropellant hydrazine propulsion to control sailcraft orientation and perform trajectory correction maneuvers (TCM), and has a jettisonable sail. Spin stabilization was selected for attitude control after studies of other options such as 1) conventional 3-axis control showed that option to require a prohibitively large amount of propellant to counter the perturbing effects of solar torque, the dominant external perturbation to the sailcraft, and 2) a moving-mass 3-axis concept, which would enable active nulling of the sailcraft center-of-mass/center-of-pressure offset through control of the location of the sailcraft center-of-mass, showed that option to be more complex and costly, as discussed in detail in Reference 6. Selection of conventional propulsion for sailcraft attitude orientation control was a natural given it was required to perform TCMs during the ballistic transfer to L1 and its selection would minimize the risk to sailcraft development that would be imposed by using

close up

Criteria for Sail Selection and Design		
A. Critical (12 Points Each. Total: 48 Points)	**B. Important (4 Points Each. Total: 44 Points)**	**C. Desirable (2 Points Each. Total: 8 Points)**
1. Provides for a slow, controlled deployment minimizing film stress and film surface rubbing during deployment and, should full deployment fail to occur, a geometry – to the extent feasible – favorable to degraded flight system performance 2. Offers insensitivity to flight system orientation during sail deployment, an unexpected deployment sequence, or a longer-than-expected time to deploy 3. Minimizes total project technical risk, schedule risk, and cost risk 4. Offers high structural margins (strength and stiffness) under combined loading and deflection conditions, tailorability to add strength where it is needed, and the potential to accommodate less than perfectly straight struts	1. Minimizes total project cost 2. Accommodates growth in sail dimensions 3. Permits repeatability in manufacturing such that the results of ground analysis and test form a reliable guide to in-flight performance 4. Provides promise for future propulsion subsystem mass reductions, that is, reduced areal mass density, as well as, in particular, reduced structural element linear mass density < 45 g/m. Also Includes the promise for spacecraft bus mass and/or spacecraft expendable reduction 5. Accommodates spin or 3-axis flight system attitude control 6. Technology provider offers experience and demonstrated success with large, inflatable structures 7. Minimizes membrane stress concentrations 8. Minimizes the potential for premature rigidization, both pre- and post-launch 9. Accommodates the introduction of new component technologies 10. Avoids dependence on spacecraft power for deployment and rigidization or, if power is required, minimizes that dependence 11. Maximizes maintenance of the desired deployed geometry under environmentally- and flight-system-induced loads	1. Tolerance to increasingly hostile environments, in particular, increased thermal loads, radiation, and spacecraft-induced contamination, as well as insensitivity to close proximity to either warm or cold structures 2. Minimizes stowage volume and accommodates stowage shapes 3. Technology provider provides depth and breath in applicable company resources 4. Offers long shelf life and insensitivity to shelf stowage conditions
Notes: • Criteria shown in priority order, top to bottom, left to right • Total potential score: 100 points		

Figure 6 Criteria for Sail Selection and Design

other alternatives to orientation control like vanes. Also, the use of conventional propulsion offered, together with the capability for sail jettison, the advantage of permitting the sailcraft to operate – and hence perform a conventional L1 Geostorm Mission – without the sail were the sail not to deploy properly and have to be jettisoned. In addition to the reason just noted, sail jettison capability was also considered critical to develop and demonstrate to lay the foundation for other sail missions expected to employ the sail as a propulsion stage to be expended upon arrival at a target of interest to permit, for example, high-precision pointing that could be compromised by having a large, difficult-to-maneuver, permanently-attached sail.

"New"-Technology-Based Geostorm Sailcraft Performance and Design

What the early results of the ISPT Program show for Geostorm Warning Mission performance is the potential for ground demonstration within two years of an overall sailcraft loading of 9.48 g/m2 compared to the 1999 NMP ST-5 Sub-L1 Sail Project proposal's 42.1 g/m2 at beginning-of-life and 36.3 g/m2 at end-of-life. Sailcraft loadings of 9.48 g/m2 can enable achievement of a stable equilibrium station near 0.974 AU, equivalent to an increase in warning time of nearly a factor of 4 compared to the factor of 2 for the 1999 ST-5 Geostorm proposal compared to a conventional satellite stationed at the L1-point.

The new sailcraft design's enhanced performance is achievable principally through an increase in sail area from the ST-5 proposal's ~ 5000 m2 to 10,000 m2, a system scale up, with its attendant decrease in sailcraft areal density and hence improved sailcraft characteristic acceleration, made viable by the substitution of 2-micron-thick mylar for the ST-5 design's 8-micron Kapton (based on improved, soon-to-be-demonstrated, under ISPT-Program sponsorship, confidence in the ability to fabricate sails with such thin membranes) and recognition that a viable, useable, sail can be designed without high sail stresses (that is, by using sail stresses << 10 psi). This latter epiphany permits the design of acceptably strong booms with the required length to support the larger sail area at boom linear mass densities that make the sail scaling up trade smart from a system performance point of view, enabling an improvement in sailcraft aeral density of ~ 20g/m2. Also of value in improving performance, though of substantally less significance, are item-by-item replacement of spacecraft elements with lower mass elements, use of new vehicle system design approaches, such as the use of a carrier module to accommodate launch loads and permit "packaged" jettison of unneeded sailcraft elements post-launch, use of a free-flying sailcraft diagnostic imaging system to permit deletion of in-situ diagnostics, and substitution of a propellantless method for attitude control (with an attendant switch from spin to three-axis stablization), as summarized and quantified in Figure 2. As Figure 2 shows, the use of lower mass spacecraft elements, a carrier module, and a free-flying diagnostic system, together, may offer mass savings of 10 kg, equivalent to an improvement in sailcraft aeral density of 2 g/m2. For propellantless attitude control, however, specifically vane control (the only propellantless method for attitude control explicitly studied herein), the potential exists to save up to 30 kg in hydrazine system mass, propellant/pressurant, and the thruster boom mass required to support the system's thrusters compared to the ST-5 proposal which, when reduced by the ~ 10 kg mass of the vanes, their actuators, et al, results in a net improvement in sailcraft aeral density of 4 g/m2.

Most of technologies and design approaches described above can be implemented without mission and programmatic impact to the Geostorm Warning Mission as proposed in 1999 with the attendant performance benefits derived, while one does not. The technologies without impact include lower mass spacecraft elements, the use of the carrier module and free-flying imaging system, and scaling up of the sail's size, together enabling an improvement in sailcraft areal density of 22 g/m2, equivalent to more than a factor of 1-1/2 in solar storm warning time. The technology with an impact, however, is propellantless propulsion. In this case, because attendant to the use of propellantless propulsion would be, it is assumed, deletion of conventional propulsion, a failure of the

sail propulsion subsystem would leave the Geostorm sailcraft without the capability to perform a conventional mission at L1, or get to L1. This would mean a loss of the 1999 mission's robustness to sail failure, long a strong point of the 1999 proposal's mission system design. While not necessarily fatal to the use of propellantless propulsion in the context of a Geostorm mission, such a change would be new to the mission as previously designed and is noted here for NOAA consideration. Also, as already noted, a factor of more than 1-1/2 in storm warning time can still be achieved with the technologies and approaches described without the use of propellantless propulsion

The above considerations aside, Figure 7 shows a notional sailcraft bus design for a propellantless Geostorm sailcraft design, and Figure 8 shows the sailcraft with an entirely separable carrier module that would be required to implement the propellantless design. The two paragraphs that follow describe some of the potential, new, Geostorm Mission sailcraft design features while identifying some of the key factors requiring consideration in future, more comprehensive, updates to the design.

Sail Design. The new-technology sail design utilizes L'Garde, Inc.-developed inflatable, rigidizable booms using sub-Tg rigidization in place of the 1999 ST-5 proposal's UV rigidization, a 2-micron (0.08-mil) thick mylar sail membrane in place of the 1999 proposal's Kapton, very, very low sail stresses, that is, sail stresses << 10 psi, and control vanes for sailcraft orientation control. Use of control vanes for orientation control permits the sailcraft lifetime to be controlled not by propellant availability but by conventional spacecraft element life. The total flight or operational mass of the sail, or Sail Propulsion Subsystem (SPS), is 43.3 kg not including approximately 27 kg of jettisionable elements. The linear mass density for the boom is 30.5 g/m compared to the UV-rigidized boom's 41.1 g/m.

Sail Vehicle System Design. Like the ST-5 sailcraft, the new-technology sailcraft would be comprised of a sailcraft bus, solar sail, and instrument payload. Unlike the ST-5 sailcraft, the new technology sailcraft would employ three-axis stablization, have no conventional chemical propulsion, and take advantage of newly-emerging technologies in small, free-flying inspection robots to image the sail deployment and troubleshoot anomalies, the use of the latter technology permitting elimination of the parasitic mass of an in-situ imaging diagnostics system and potentially reduced packaging complexity for the sail. Also new to the design is the concept of an entirely separable carrier module which would be used to accommodate the launch loads, provide sailcraft vehicle stabilization during post-launch sail deployment, and provide a convenient, low-risk mechanism for jettisioning the hardware elements needed to support the sailcraft's post-launch sail deployment.

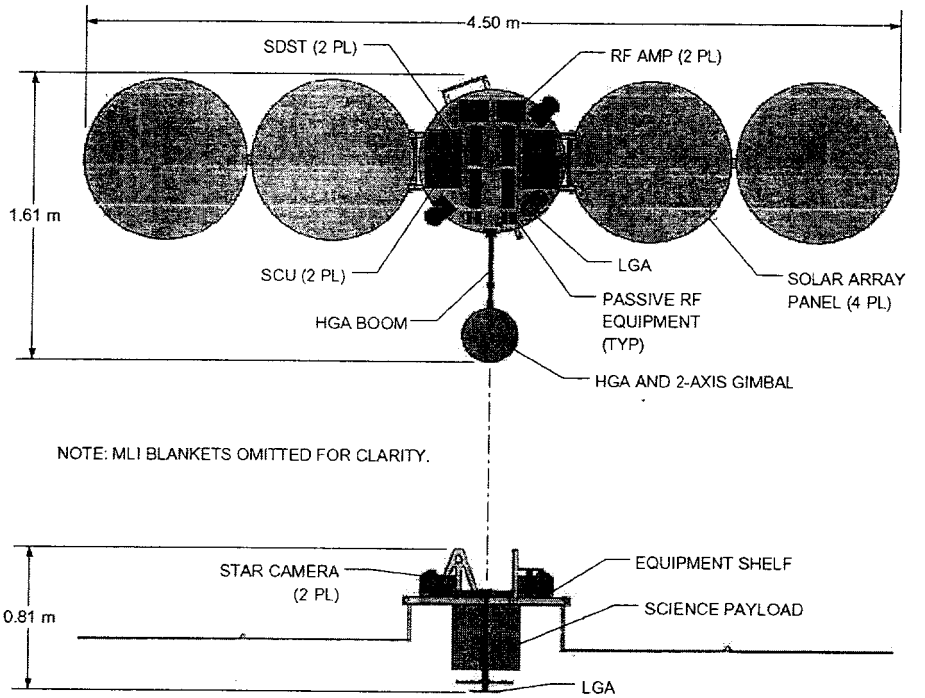

Figure 7 New-Technology-Based Geostorm Sailcraft Bus

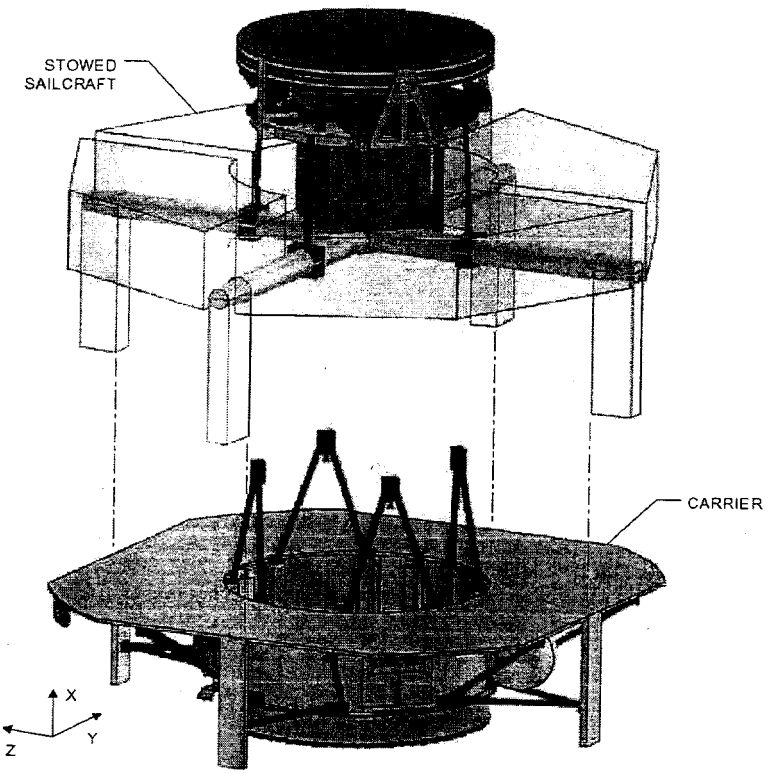

Figure 8 New-Technology-Based Geostorm Sailcraft and Carrier Module

Comparison of 1999 ST-5 and New-Technology Geostorm Sailcraft Designs

Figure 9 summarizes the key aspects of the ST-5 Geostorm sailcraft and new-technology-based Geostorm sailcraft designs, as just described.

Sailcraft Comparison		
Item	**1999 NMP ST-5 Sub-L1 Geostorm Sail Project Proposal**	**New-Technology-Based Geostorm Sailcraft**
• System Characteristic/Performance Metric		
– Sailcraft Characteristic Acceleration	• 0.169 mm/s^2	• 0.438 mm/ s^2
– Operational Station Location on Earth-Sun Line	• 0.983 AU (@ EOM)	• 0.974 AU
– Sailcraft Areal Density (dry)	• 36.3 g/m^2	• 9.48 g/m^2 (assuming use of vanes, carrier module architecture)
– Sail Propulsion Subsystem Areal Density	• 18.9 g/m^2	• 4.9 g/m^2 (assuming use of vanes)
– Lifetime	• 18 months (3-year goal), propellant limited	• > 3-5 years, conventional spacecraft element/mechanisms limited
– Radiation Tolerance	• Compatible with lifetime goal	• No change
• Sailcraft System		
– Mass (dry)	• 181.4 kg	• 94.8 kg
– Power (On-Station)	• 193.3 W	• No change
– Attitude Stabilization	• Spin	• 3-axis (assuming use of vanes)
• Sailcraft Bus	• Small satellite technology	• No change
– Structure and Mechanisms		
– Power		
– Command and Data		
– Telecommunications		
– Thermal Control		
– Attitude Control/Propulsion	• Conventional monopropellant Hz	• Hz system deleted
• Sail Propulsion Subsystem (SPS)		
– Booms/Structure	• Inflatable UV-rigidized Kevlar. Linear mass density: 41.1 g/m^2	• Inflatable sub-Tg-rigidized Kevlar. Linear mass density: 30.5 g/m^2
– Membrane	• 8-micron-thick Kapton	• 2-micron-thick mylar
– Vanes	• Not used	• Used
– Jettisonable Elements	• Inflation system, sail stowage canister	• Carrier module
• Payload/Instrumentation	• 3 instruments, 4.5 kg total • In-situ deployment imaging diagnostics system	• No change • Free-flying inspection system

Figure 9 Sailcraft Comparison

CONCLUSION

Described herein is a concept for a new-technology-based Geostorm Warning Mission sailcraft design. The sailcraft is capable of operating at a station location inside the Earth's L1 point near 0.974 AU. Positioned here, the sailcraft offers an improvement in solar storm warning time equivalent to a factor of nearly 2 compared to the 1999 ST-5 Geostorm proposal sailcraft, with that sailcraft positioned at 0.984 AU. The new sailcraft design makes maximal use of new developments in sail design sponsored by NASA's ISPT Program which make viable the scaling up of earlier, smaller, lower-performance, inflatable-based rigidizeable sail designs.

ACKNOWLEDGEMENT

The research described in this paper was carried out at the Jet Propulsion Laboratory, California Institute of Technology, under a contract with the National Aeronautics and Space Administration. It was sponsored by NASA, NOAA, and the United States Air Force.

Special thanks go to Mr. Richard Reinert and the Ball Aerospace Corp. for developing the details of the sailcraft bus and carrier module and L'Garde, Inc. for developing the sail subsystem design described herein.

Acknowledgement is also made to Ms. Patricia Mulligan of NOAA for user requirements definition.

REFERENCES

1. J. West, NOAA/NASA/DOD Geostorm Warning Mission, JPL Internal Document D-13986, 18 October 1996.
2. C. McInnes, Solar Sailing: Technology, Dynamics, and Mission Applications, 1999.
3. J. West, NMP ST-5 Solar Sail Project Concept Study Report, July 15, 1999.
4. J. West and B. Derbes, Solar Sail Vehicle System Design for the Geostorm Warning Mission, AIAA-2000-5326, September 21, 2000.
5. P. Mulligan, Operational Solar Wind Data: Request for Information, NOAA/NESDIS/OSD, 2003.
6. G. Singh, Attitude Control for the Geostorm Warning Mission, JPL IOM EM 3455-98-08, 12 October 1998.