Terrestrial Planet Finder Mission

TPF

A NASA Origins Mission

Testbed for a Mid-infrared Beam Combiner for Terrestrial Planet Finder

Stefan Martin

Jet Propulsion Laboratory

California Institute of Technology

Pasadena, CA

Contents

Terrestrial Planet Finder Mission

TPF

A NASA Origins Mission

- Testbed context
- Performance goals
- Functions and components
- Planet detection
- Architectures and fringe tracking
- Testbed plan
- Summary

Testbed context

- Principal JPL testbeds
  - Planet Detection
    - Monochromatic, 10.6 micron
    - 2 nullers and cross-combiner
    - Fringe tracking, cross-phasing, stable nulling
  - Achromatic nulling
    - Cryo nuller
      - 7-12 micron, 77K cryo chamber
      - low flux, stable nulling, planet detection
    - Warm Nuller
      - general purpose, physics testbed
  - Adaptive Nuller
    - Broadband phase and amplitude control
  - Mid-IR single mode spatial filters
    - Essential components for deep, stable nulls

Terrestrial Planet Finder Mission

TPF

A NASA Origins Mission

Testbed goals

Terrestrial Planet Finder Mission

TPF

A NASA Origins Mission

- Planet detection
  - planet intensity 10^{-6} of star
  - nulling stability 10^{-7}
- Fringe tracking and OPD control
  - about 1 nanometer
- Amplitude control
  - about 0.1%
- Formation rotation simulation
  - via control of planet phase
- Nulling, cross-combining, phase chopping
  - Monochromatic, high flux nulling at 10.6 μm
  - Broadband fringe tracking at 2.5 and 3.5 μm

Functions compared: PDT and TPFI

Terrestrial Planet Finder Mission

TPF

A NASA Origins Mission

	Planet Detection TB	TPFI
Input beams	4	4 (N?)
Nulling	1 output	4 outputs
Fringe tracking	3 fringe trackers	3 fringe trackers
Pointing/shear	4 continuous	4 continuous
Internal metrology	8 gauges	12 gauges
Phase chopping	Yes	Yes

Planet Detection Testbed Functions

Terrestrial Planet Finder Mission

TPF

A NASA Origins Mission

- Nulling and cross-combining
  - Nulling at 10.6 micron
  - Fringe tracking at 2.5 and 3.5 micron
  - Laser metrology at 1550 nm for OPD control
  - Phase chopping
- Amplitude control
  - Static
  - Pointing
  - Shear
- Planet detection
  - Detection:- direct modulation of the planet inside the star and planet source by for example phase or amplitude modulation
  - Extraction:- indirect modulation of the planet by phase chopping
- Performance goals
  - Planet extraction 10^{-6} @ 5 σ SNR
  - Null stability 10^{-7}

Main testbed layout (schematic only)

Terrestrial Planet Finder Mission

TPF

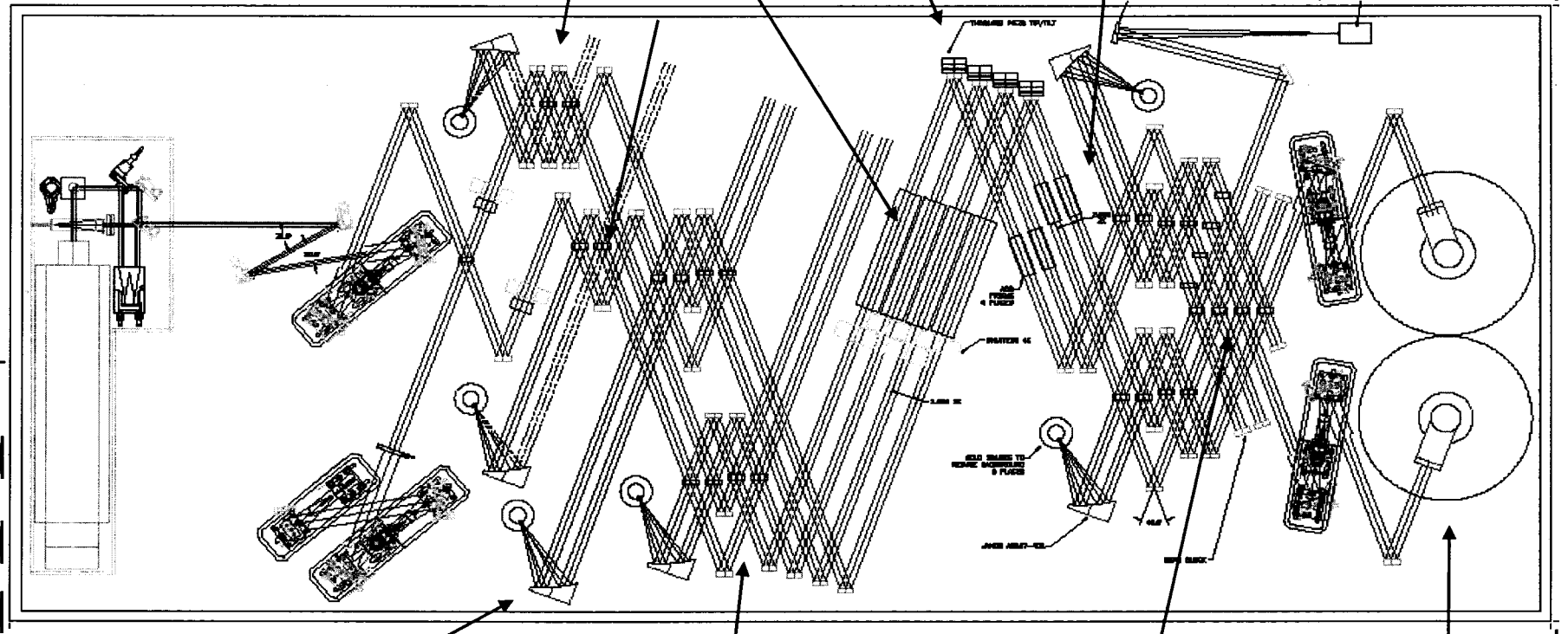

A NASA Origins Mission

Nulling and Phase Chopping

Terrestrial Planet Finder Mission

TPF

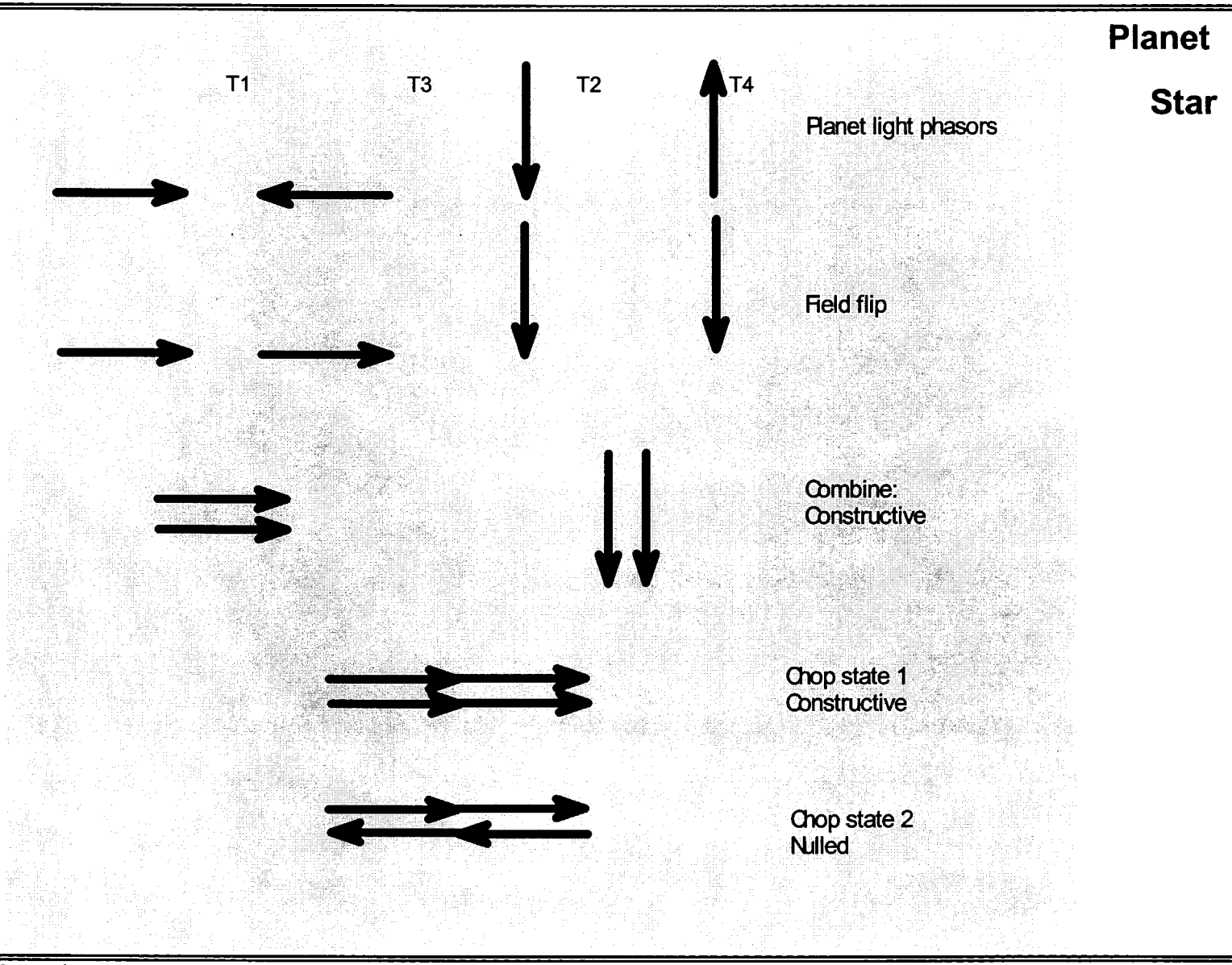

A NASA
Origins
Mission

Nulling stability model

Terrestrial Planet Finder Mission

TPF

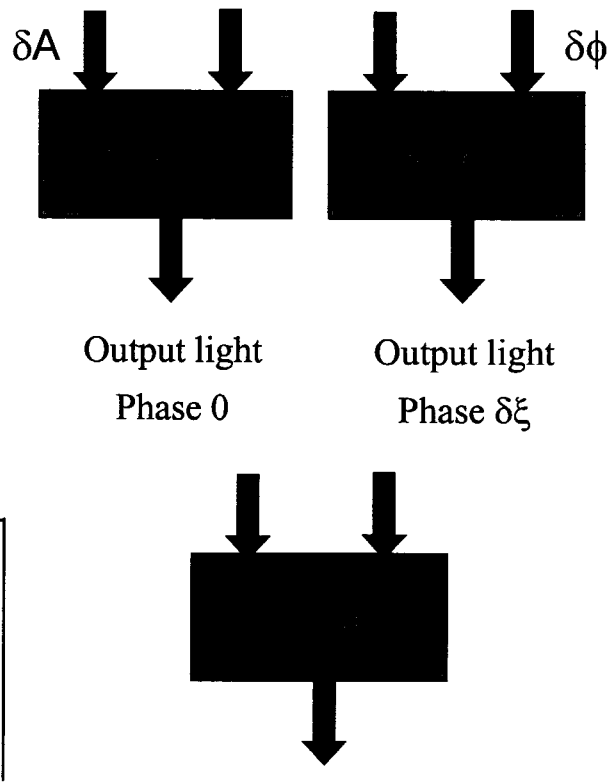

Beamcombiner model in Mathcad:

Null pairs of beams and cross-combine outputs with random phase and amplitude errors

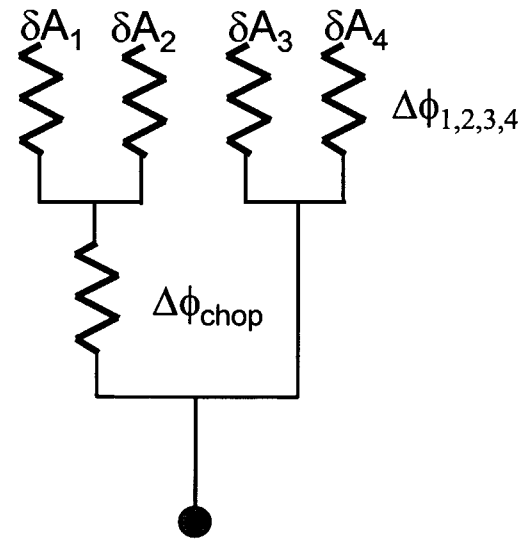

Results:

Cross terms $\delta A \delta A$ are free of chop modulation

Cross terms $\delta\phi\delta\phi$ are free of chop modulation

Cross terms $\delta A \delta\phi$ are modulated by chopping

Required OPD stability ~1 nm rms each path

Required amplitude stability ~ 0.001 each path

A NASA Origins Mission

Simulated planet signal with added phase and amplitude disturbances

Terrestrial Planet Finder Mission

TPF

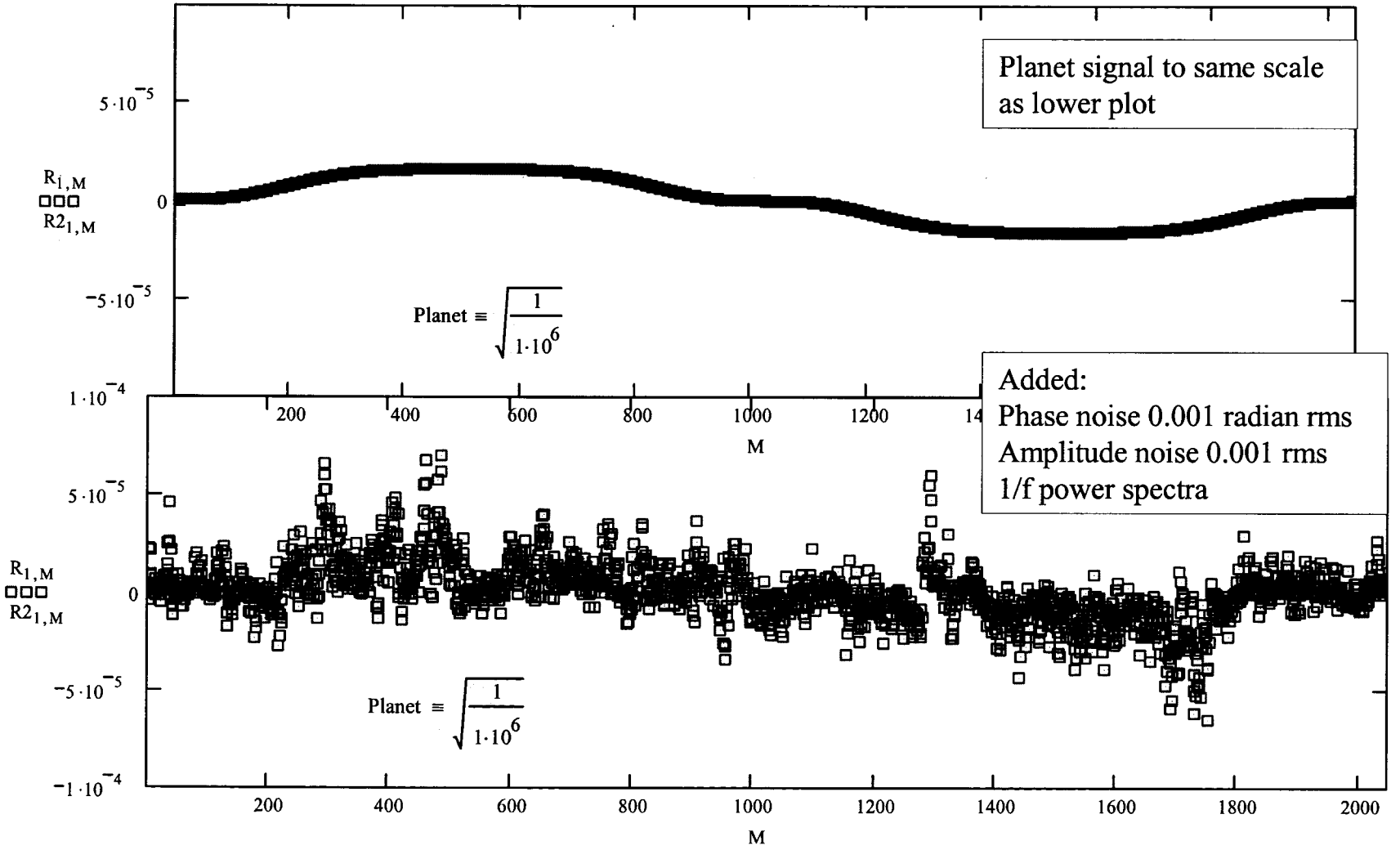

A NASA Origins Mission

Fringe tracking concepts

- Fringe tracking
  - Short wavelength (2 μm) stellar photon rate is high enough to fringe track at moderate bandwidth (10-100 Hz)
- Two concepts:
  - Fringe track on the nulling beamsplitter
    - Use metrology to set up null and monitor and correct for ambient vibrations
    - Need unbalanced dispersion ahead of nullers to achieve at least partially constructive interference at the fringe tracking wavelength
      - Phase plate device
      - Adaptive nulling device
    - Second scheme for cross-combining?
  - Separate fringe tracking beamsplitter
    - Fringe track on separate beamsplitter
    - Measure OPD between input beams using laser metrology
    - Transfer measurement to nulling beamsplitter
    - Similar scheme for cross-combining

Use of ZnSe/ZnS phaseplates for electric field inversion

Terrestrial Planet Finder Mission

TPF

A NASA Origins Mission

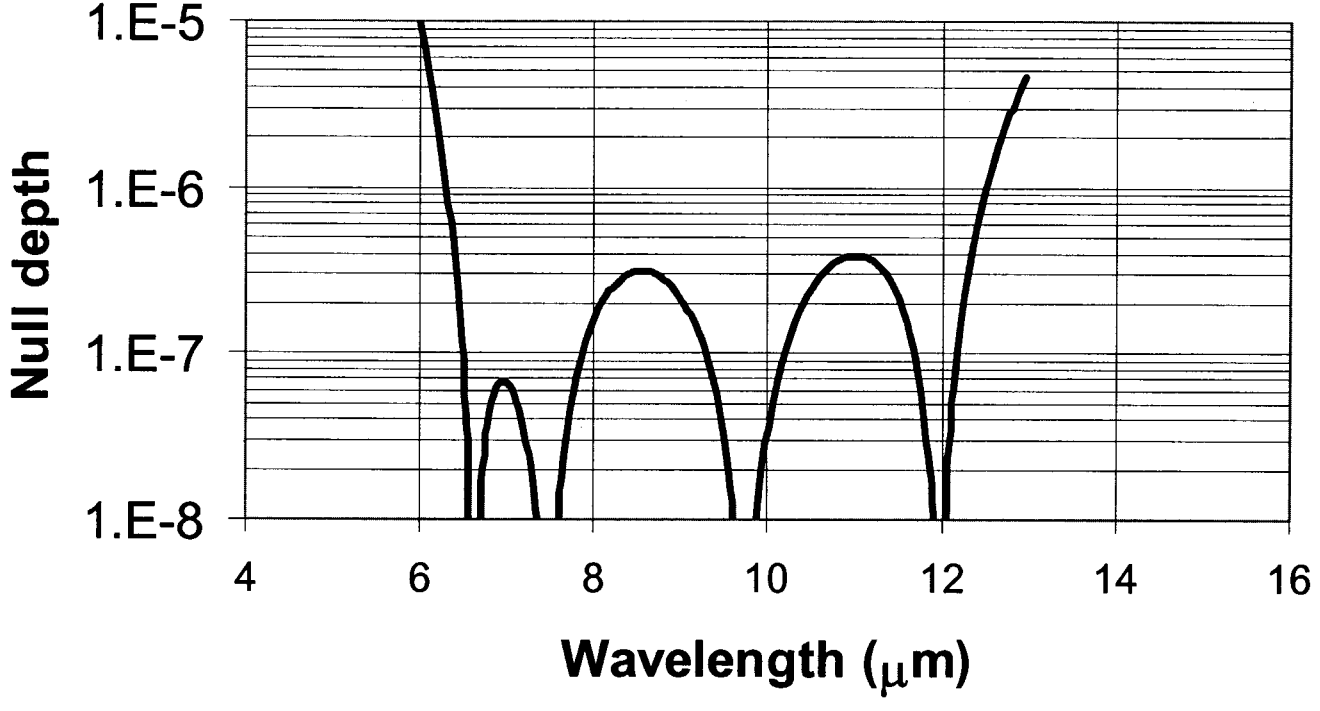

Model of null depth across a broad band using ZnSe/ZnS phaseplate pairs to invert the electric field.

Phase variation is a function of wavelength at the nulling beamsplitter

Terrestrial Planet Finder Mission

TPF

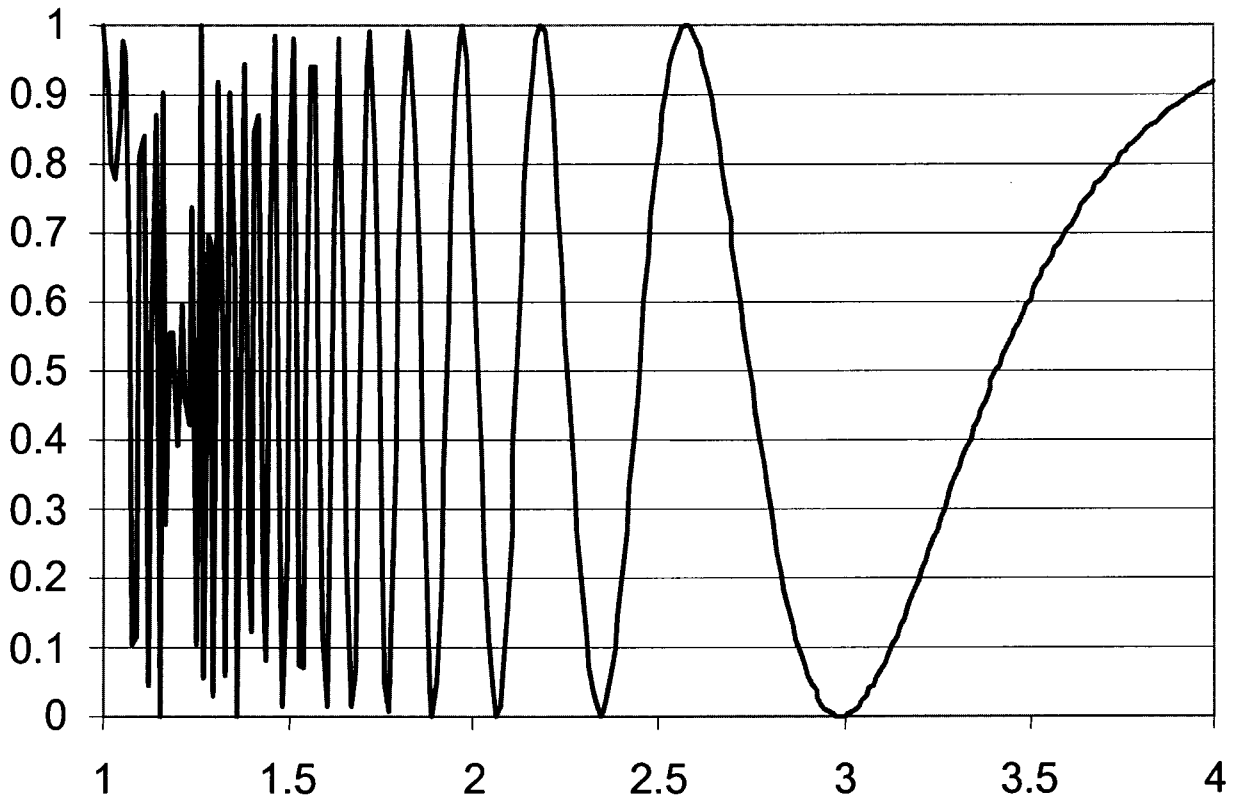

Light intensity as a function of wavelength at the "bright" output side of the beamsplitter.

A NASA Origins Mission

Simple beamcombiner

Terrestrial Planet Finder Mission

TPF

A NASA Origins Mission

Option C1:

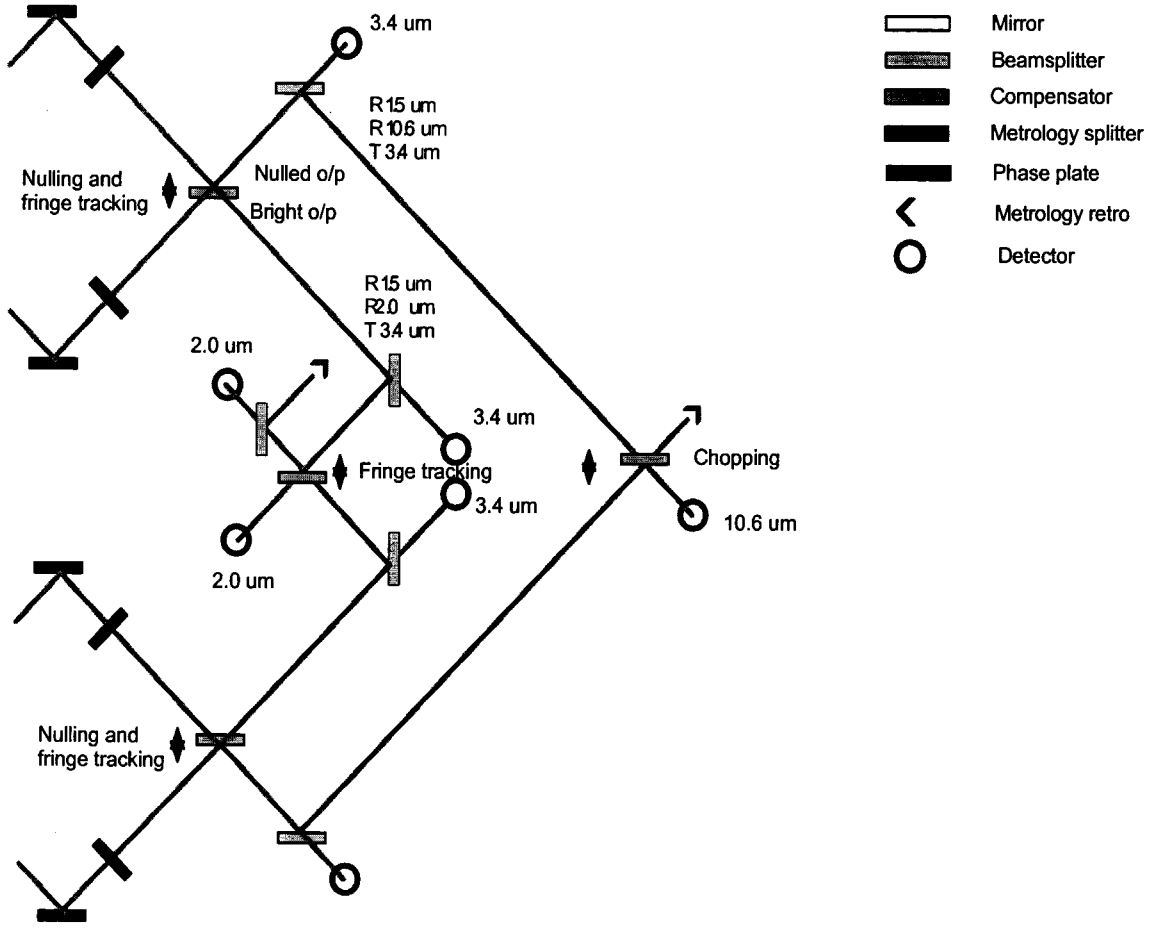

Layout 2: common path fringe tracking

Terrestrial Planet Finder Mission

TPF

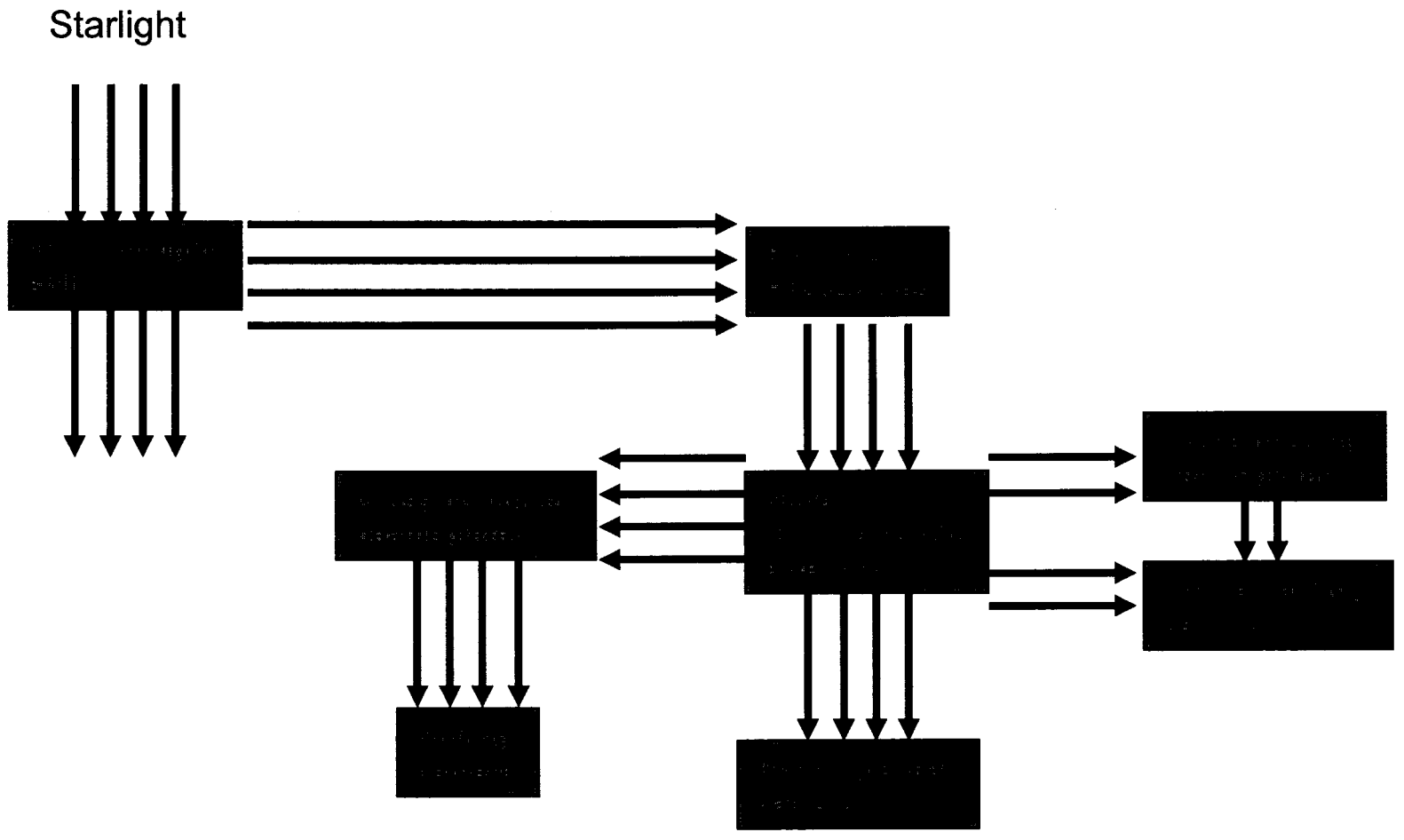

A NASA Origins Mission

High speed metrology for vibration stabilization

Terrestrial Planet Finder Mission

TPF

A NASA Origins Mission

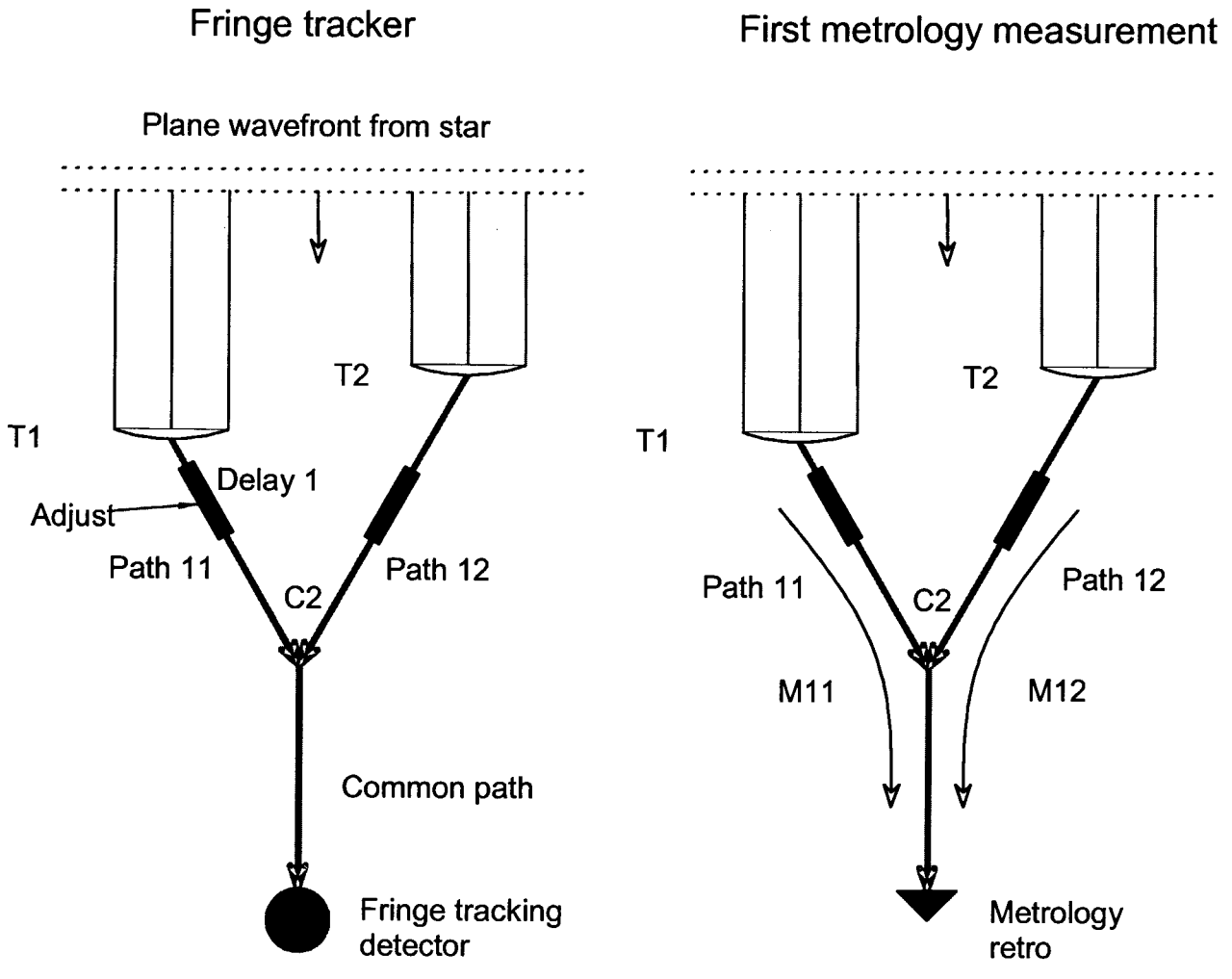

Figure 10: Operation of the fringe tracker and making a metrology measurement of OPD.

Cross-combining and phase chopping fringe tracking

Terrestrial Planet Finder Mission

TPF

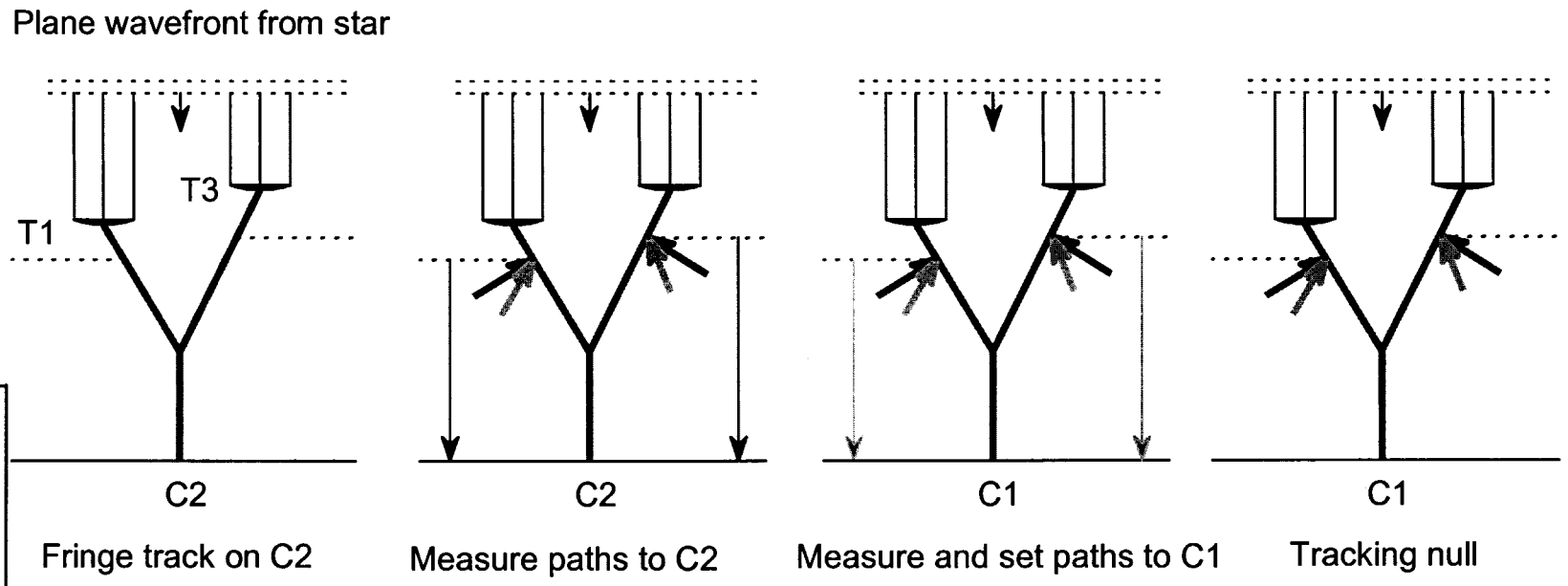

Figure 11: Summary of the fringe tracking scheme enabling transfer of OPD measured using metrology from the fringe tracking beamsplitters to the nulling beamsplitters.

A NASA Origins Mission

Layout 2: common path fringe tracking

Terrestrial Planet Finder Mission

TPF

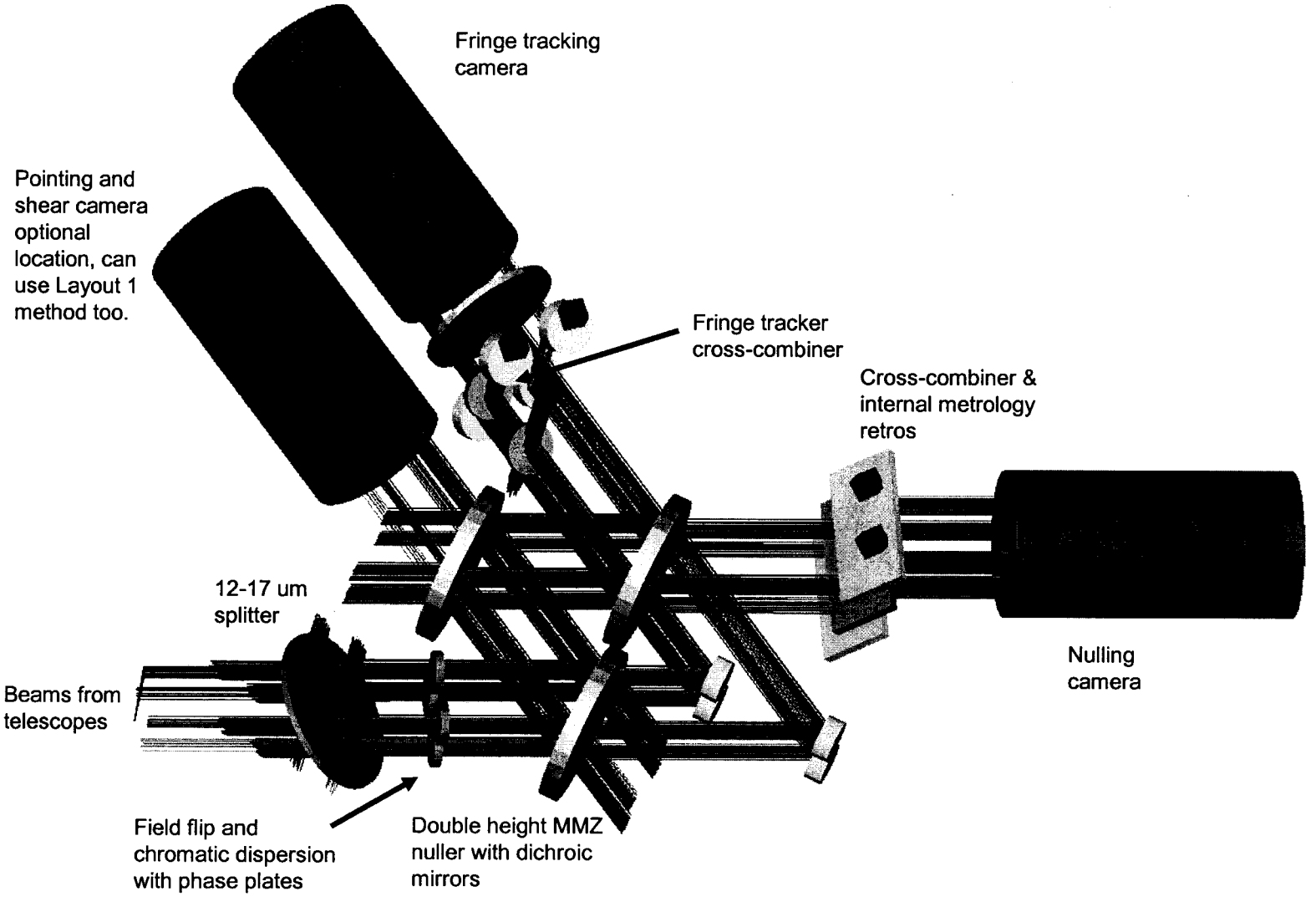

A NASA Origins Mission

Summary: What the Planet Detection Testbed will demonstrate

Terrestrial Planet Finder Mission

TPF

A NASA Origins Mission

- Demonstrates a four-input nulling beam combiner with inputs from a simulated star and planet source
- Demonstrates the servo loops and control systems necessary for co-phasing of the interferometer
- Demonstrates sufficient instrument stability and use of phase chopping to detect a faint planet
- Shows how a combination of internal laser metrology and fringe tracking from the star gives the pathlength stability necessary for planet detection
- Simulates translational drifting motions of the separate telescopes within the interferometer entrance pupil
- Demonstrates observation sequences and formation rotation, including the extraction of light from a simulated planet near a bright star
- Demonstrates a complex yet realizable space system in terms of detectors, sensors, actuators, control systems, software

Terrestrial Planet Finder Mission

TPF

A NASA
Origins
Mission

Backup slides

Testbed plan

Terrestrial Planet Finder Mission

TPF

A NASA Origins Mission

- Fast-start testbed
  - Already built
  - Two beam testbed
  - Will be used to test, evaluate and develop
    - fringe tracking
    - chopping/phase control
    - pointing/shear control
    - OPD disturbances
    - metrology systems
    - controls and software
- FY04- Finalize design and build main testbed
- FY05- Use main testbed to reach goals of
  - Four beam nulling and phase chopping @10^{-5} level
  - Planet detection @ 10^{-6} level
  - Planet extraction @ 10^{-6} level

Comments

- A second, simplified set of optics will also be required for 12-17 um nulling
  - May be able to use fringe tracker measurements from the 7-12 um nuller
  - May be able to use pointing/shear measurements from the 7-12 um nuller
- One set of external metrology runs to telescopes
  - Three metrology wavelengths
  - Four heterodyne frequencies
- One set of internal metrology between 7-12 micron nuller and 12 to 17 micron nuller
  - One metrology wavelength
  - Two heterodyne frequencies
- Metrology story might be more difficult for Layout 1, depending how the dichroics, beamsplitters and AR coatings work out.

Star and planet source

Terrestrial Planet Finder Mission

TPF

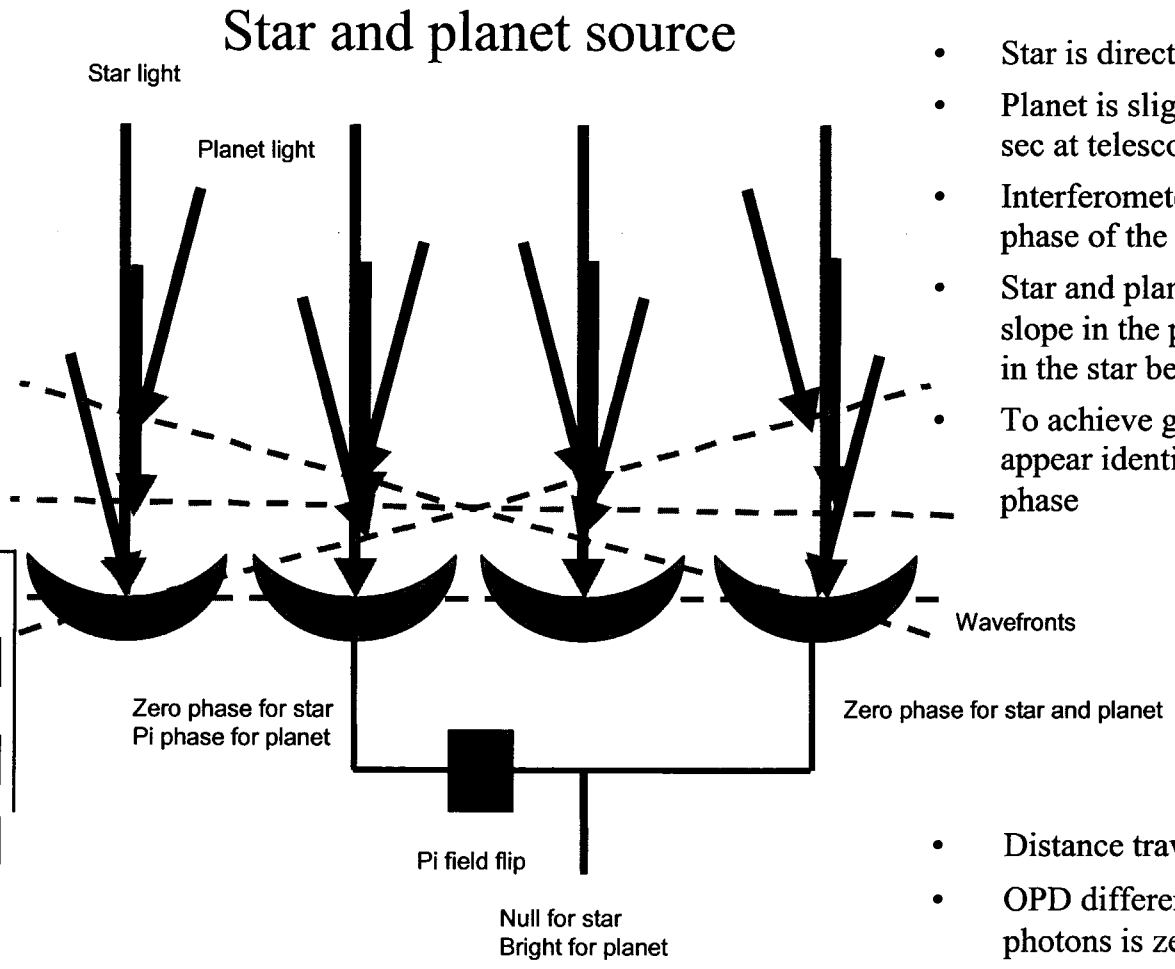

- Star is directly ahead of the telescope array
- Planet is slightly to the side, angle is 0.1 arc sec at telescope, unresolved by the telescope
- Interferometer will extract planet using the phase of the planet light
- Star and planet source must create a phase slope in the planet beams and no phase slope in the star beams
- To achieve good nulls, output star beams must appear identical in terms of amplitude and phase

- Distance traveled by photons 5 10^{17} m
- OPD difference across nuller apertures for stellar photons is zero
- OPD difference across nuller apertures for planet photons is 5 10^{-6} m

A NASA Origins Mission

Fast-start Testbed

Terrestrial Planet Finder Mission

TPF

A NASA Origins Mission

Capabilities:

1/ 3.4 um fringe tracking

2/ Metrology @1550 nm on 2 paths, later on 4 paths.

Equivalent to required metrology on input beams from two telescopes

3/ 10.6 um nulling output

4/ Lasers, thermal source for setup

Objectives:

1/ Test fringe tracking system

Track 3.4 um fringe

2/ Test metrology system

Monitor fringe tracker (2 paths)

Monitor fringe tracker and set nuller (4 paths)

3/ Closed loop control of phasing mirrors

Phase and pointing for fringe tracker and nuller

4/ Closed loop control of nuller

Control of null from fringe tracking and metrology

Lasers, then thermal source

Fast-start Testbed

Terrestrial Planet Finder Mission

TDE

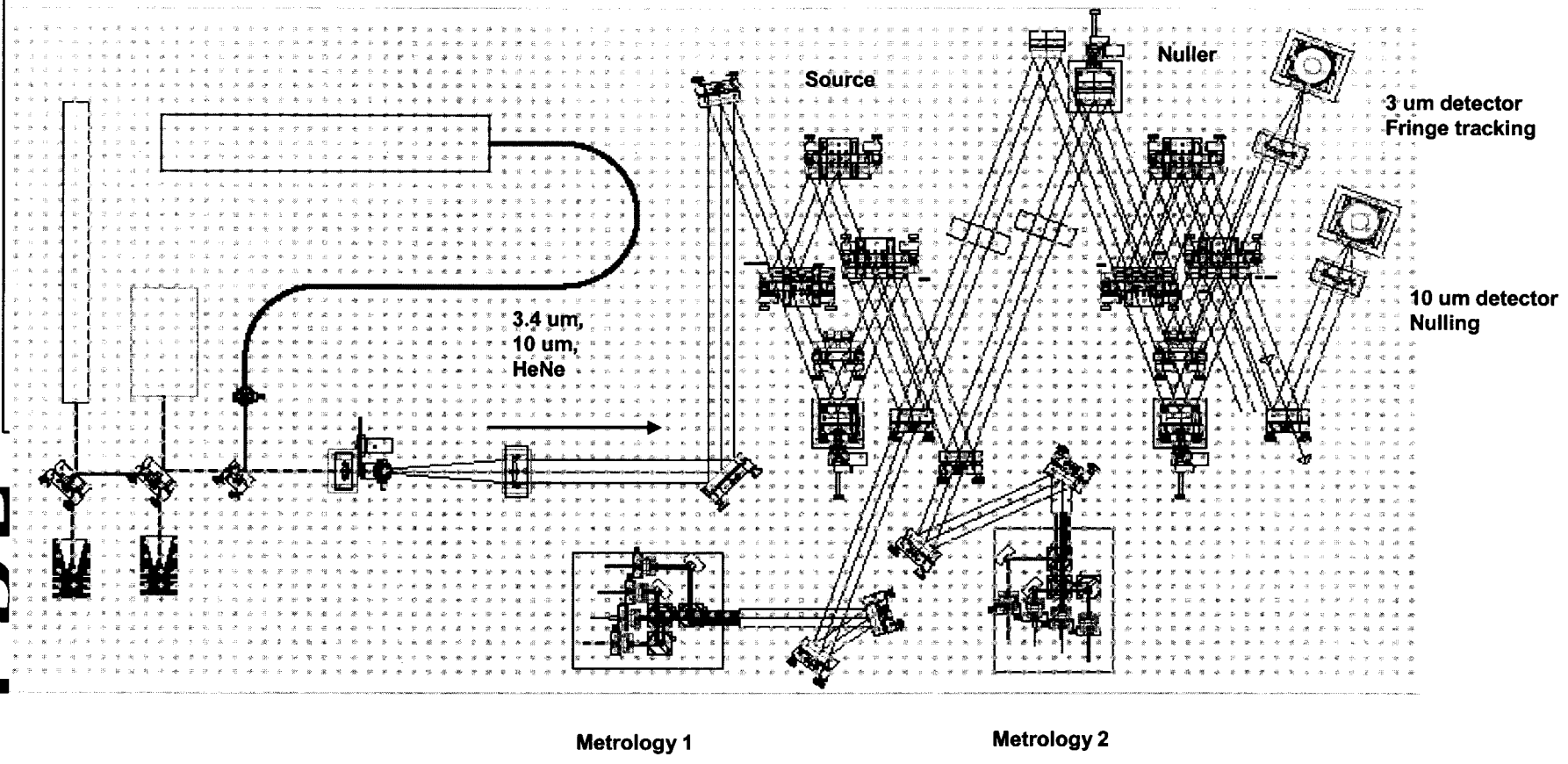

A NASA
Origins
Mission

Fast-start Testbed

Terrestrial Planet Finder Mission

TPF

A NASA Origins Mission

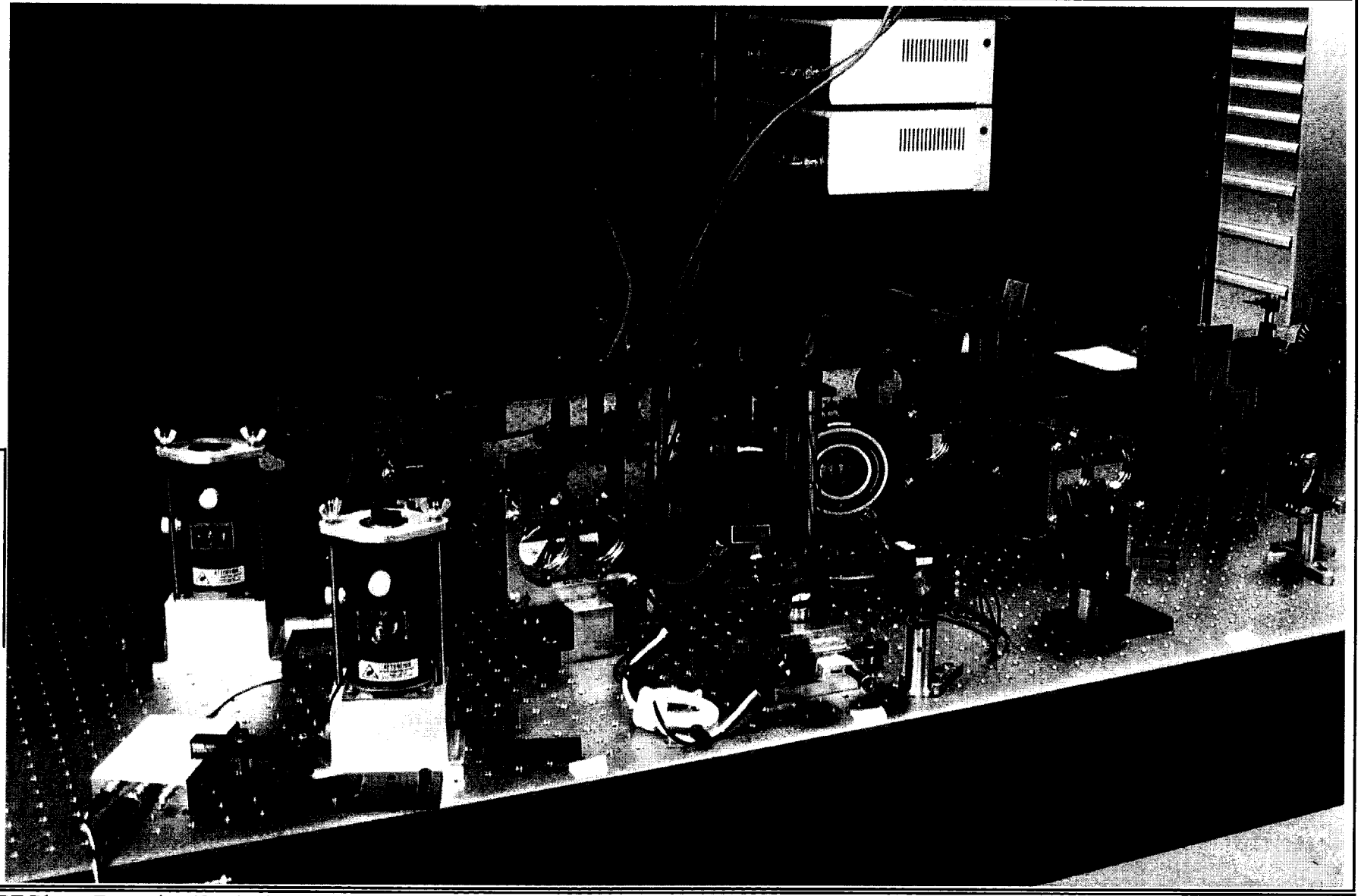

Laser metrology for the star and planet source and the beam combiner

Terrestrial Planet Finder Mission

TPF

A NASA Origins Mission

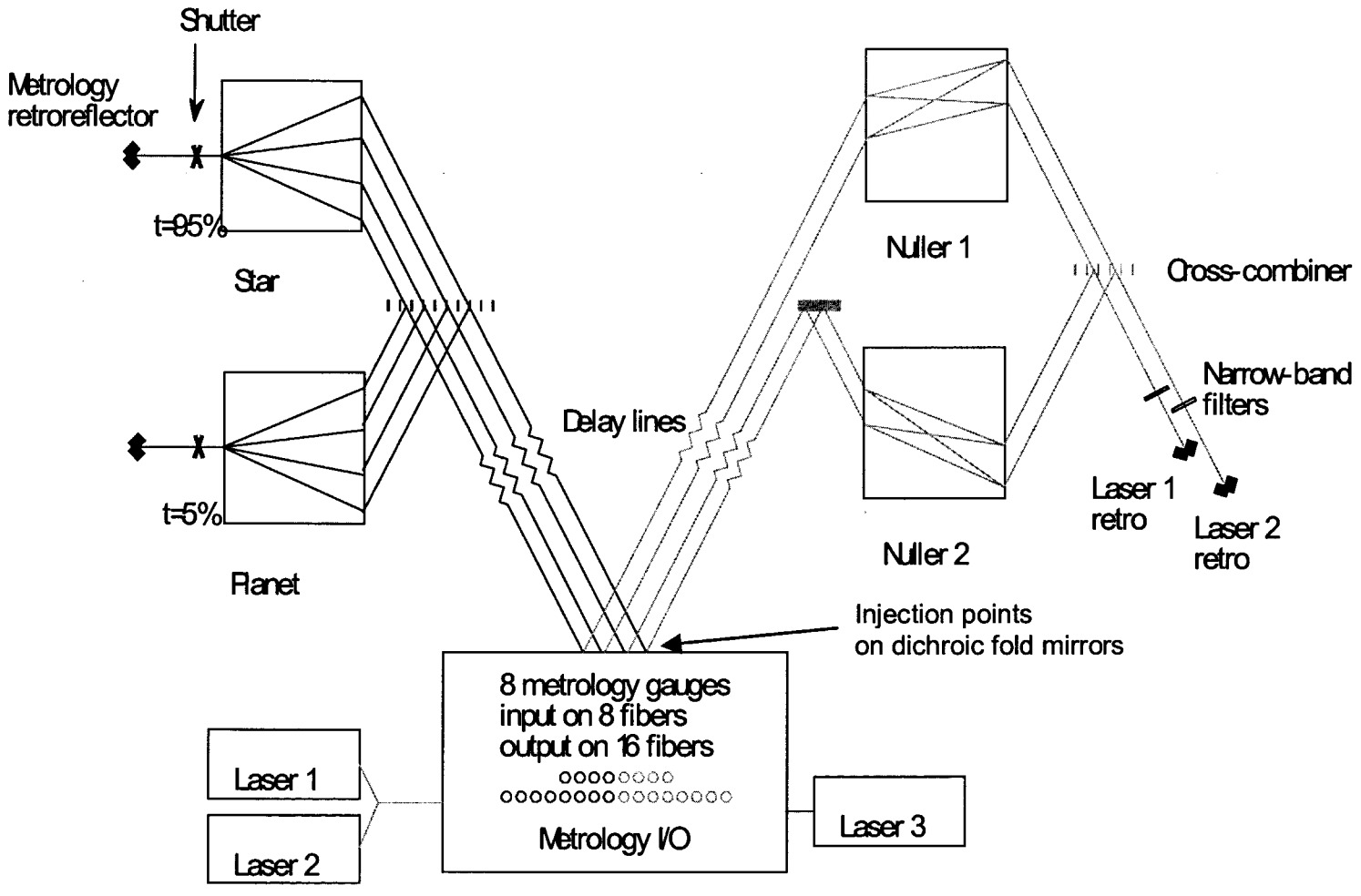

Fringe tracking and nulling (1st)

Terrestrial Planet Finder Mission

TPF

A NASA Origins Mission

Common beamsplitter approach

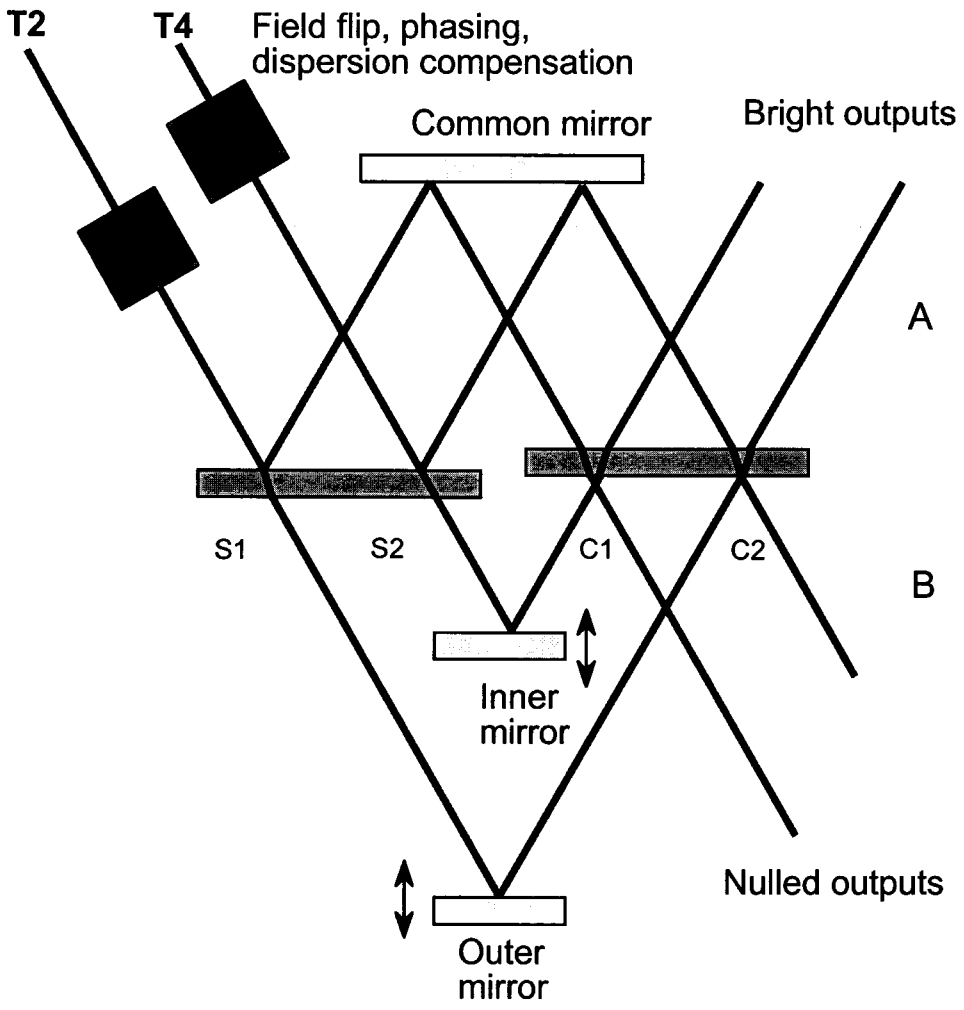

Possible fringe tracking outputs on either side of these beamsplitters:

Dispersed fringe method:

monitor fringes over a broad (say from 2 μm to 3 μm) band at the bright output

Differential intensity method:

(A-B)/(A+B)

Fringe tracking and nulling (2nd)

Terrestrial Planet Finder Mission

TPF

A NASA Origins Mission

2nd beamsplitter approach

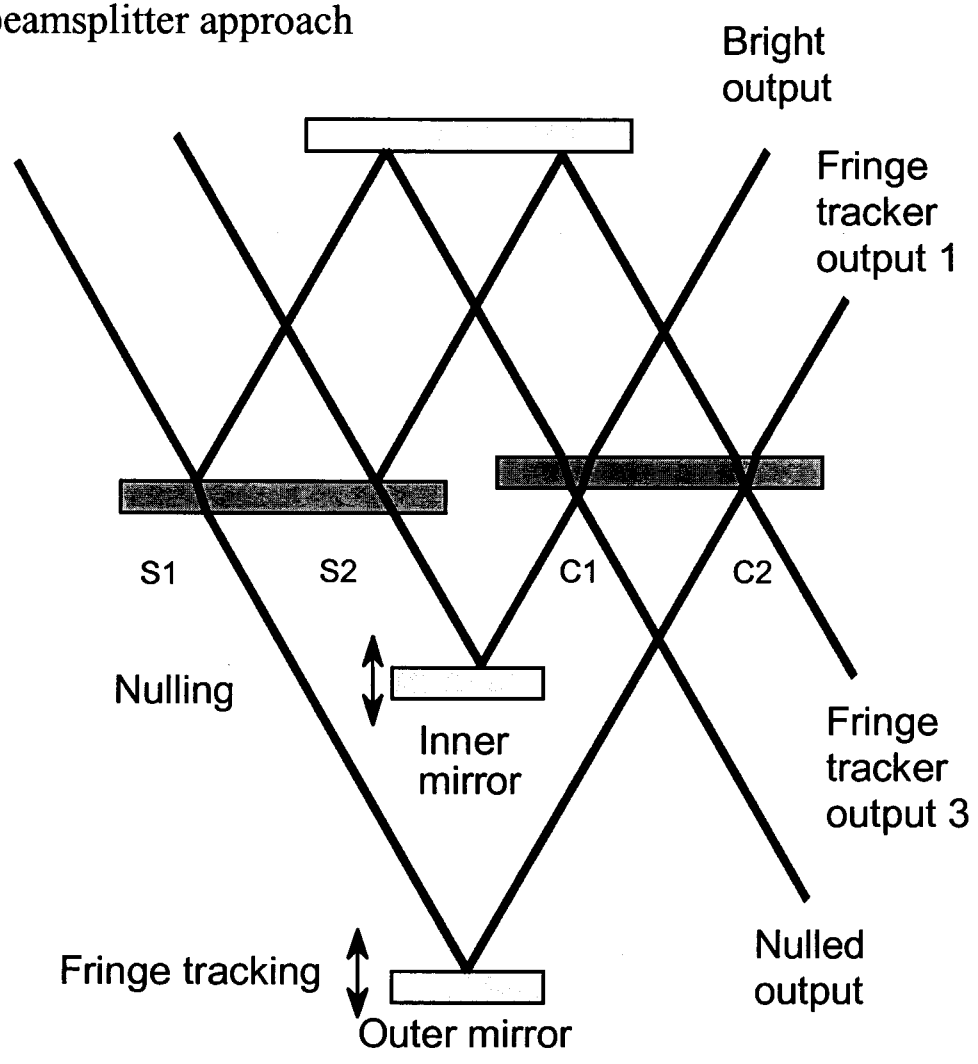

It is straightforward to add another beamsplitter to the right of C2 to obtain two-output nulling.

Fringe tracking on the beam combiner

Terrestrial Planet Finder Mission

TPF

2nd beamsplitter approach

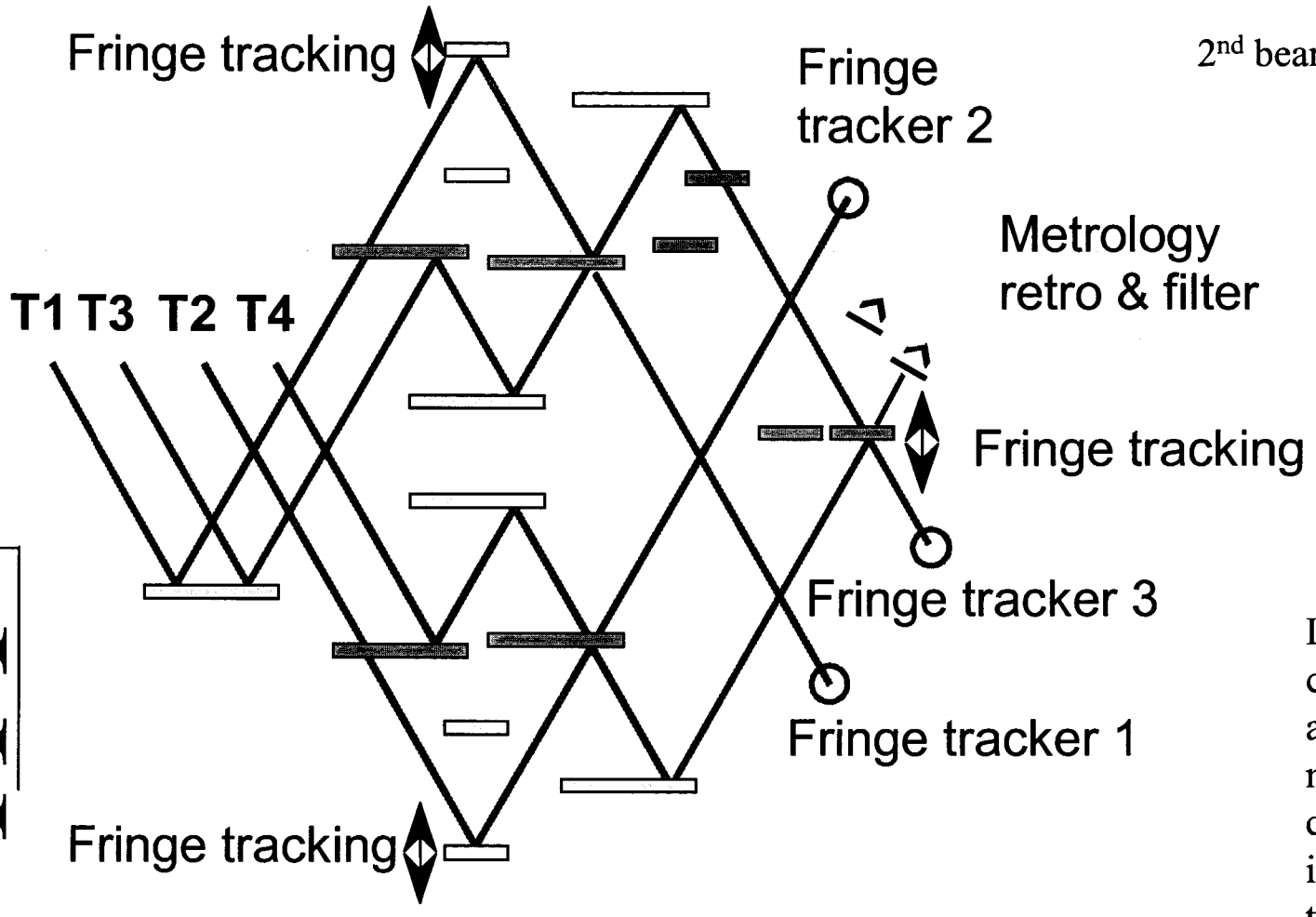

Light transmitted to cross-combiner by adjusting outer mirror to constructively interfere fringe tracking light at output beamsplitter

A NASA Origins Mission

Simulated planet signal

Terrestrial Planet Finder Mission

TPF

Planet signal (arbitrary units)

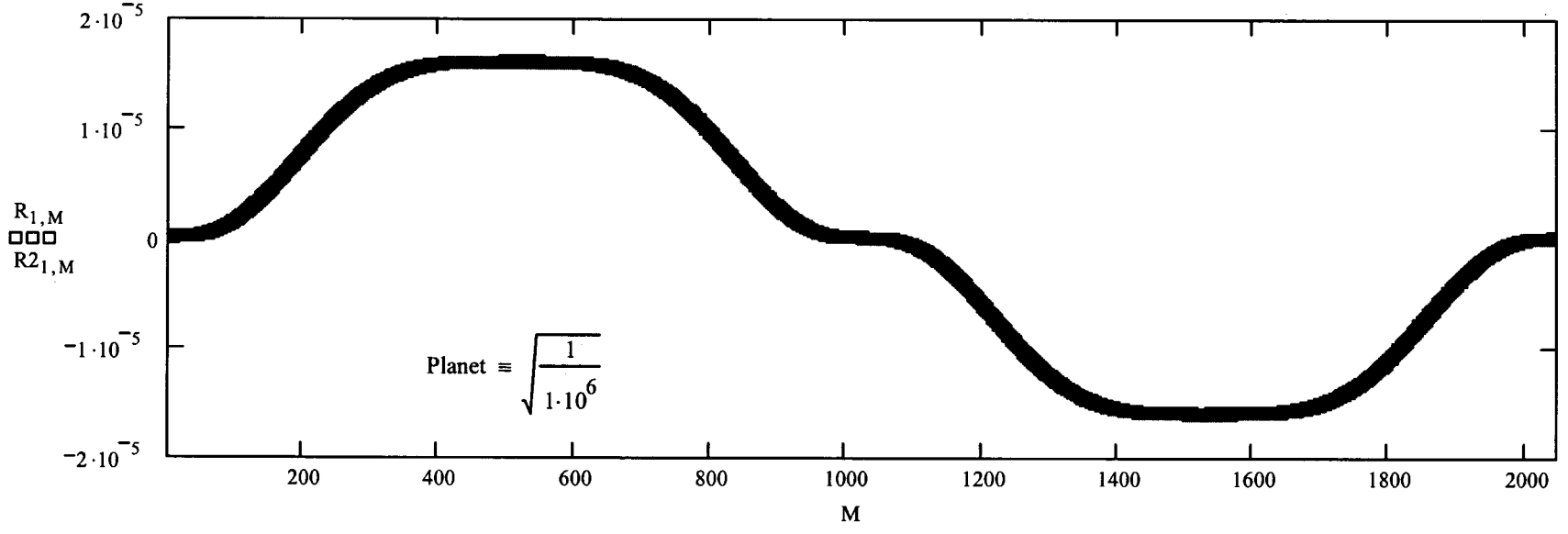

360 degree rotation of formation around line of sight:

Simulation timescale ~1 hour

Perfect amplitude and phase stability

A NASA Origins Mission

Layout 1: separated fringe tracking

Terrestrial Planet Finder Mission

TPF

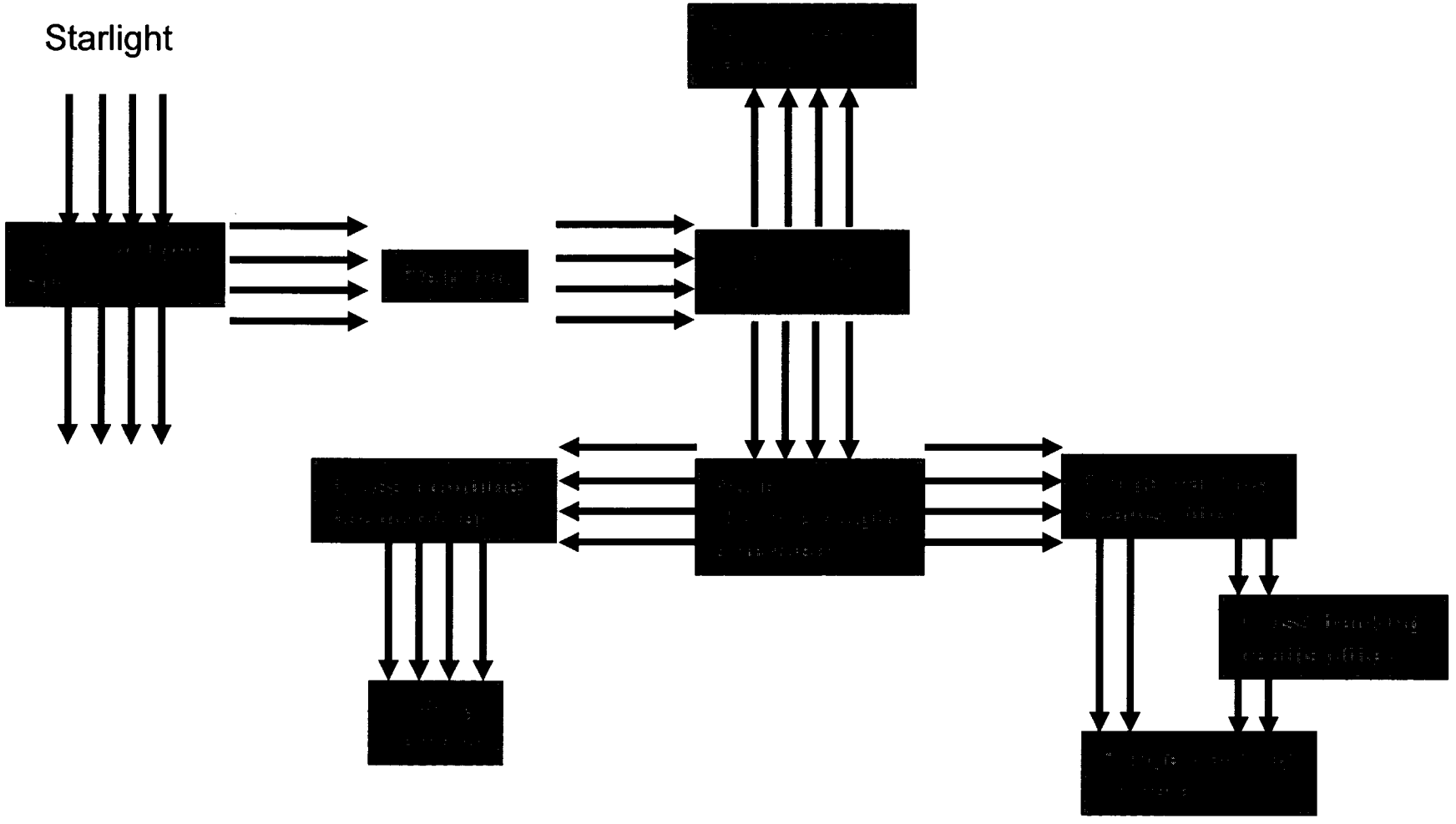

A NASA Origins Mission

Layout 1: separated fringe tracking

Terrestrial Planet Finder Mission

TPF

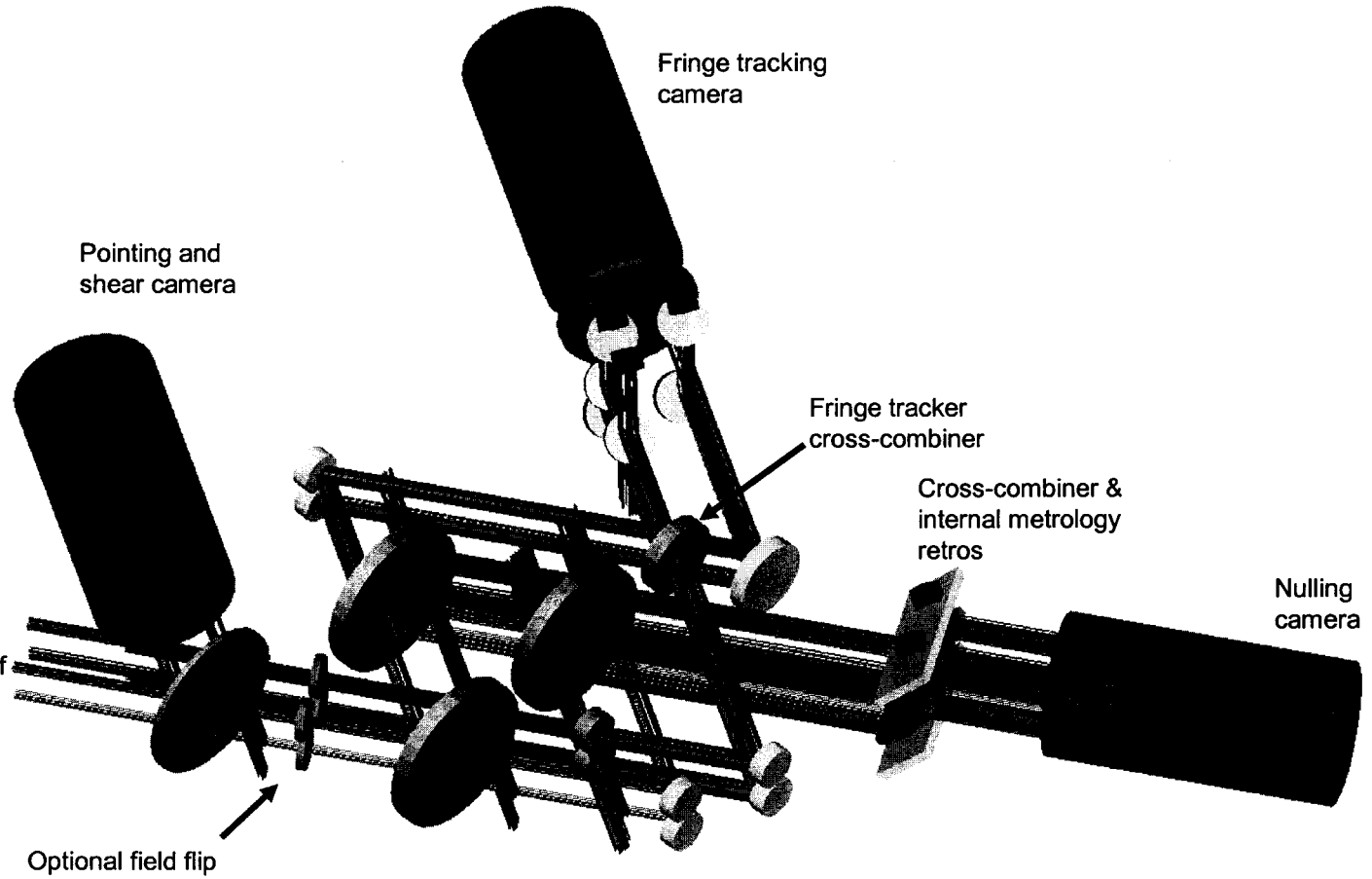

A NASA Origins Mission