The design of H- and V-pol waveguide slot array feeds for a scanned offset dual-polarized reflectarray

*Mark Zawadzki, Sembiam Rengarajan, and Richard E. Hodges
Jet Propulsion Laboratory, California Institute of Technology
Pasadena California, 91109
818-393-5472
Mark.S.Zawadzki@jpl.nasa.gov

Introduction

The ocean plays a significant role in the Earth's climate so accurate knowledge of ocean surface height is an important parameter in the study of global climate. A unique experimental mission being designed by NASA/JPL is the Wide Swath Ocean Altimeter (WSOA). A Ku-band cross-track interferometer, WSOA will produce a full three-dimensional map of ocean height and provide key information on ocean energy transport and eddy currents. WSOA requires two 2.2 by 0.35 m apertures operating at 13.285GHz, which will provide dual-beam and dual-polarization operation. A unique offset-fed reflectarray antenna design was developed to meet the requirements. Each antenna has two feeds located off-focus to produce two beams scanned ±3.3° from nadir.

Waveguide slot arrays were selected as the feeds for the reflectarray for their efficiency, low mass, high power-handling capability, and the relative ease with which to implement amplitude and phase tapers. Amplitude tapers were required to achieve the required secondary beamwidths and phase tapers were required to focus the feed energy on the reflectarray, since the reflectarray was located in the near-field of the feeds.

While the design of waveguide slot arrays is not new, this particular design effort shows that very good results can be achieved on a first attempt using established slot array design techniques and commercial software for the waveguide power divider network. The presentation will discuss this design process in detail.

Feed Design

Basic system requirements specified the scan angle and beamwidth for both the azimuth and elevation directions and set the geometry shown in Fig. 1. The design task was to provide an illumination on the reflectarray to satisfy the system requirements.

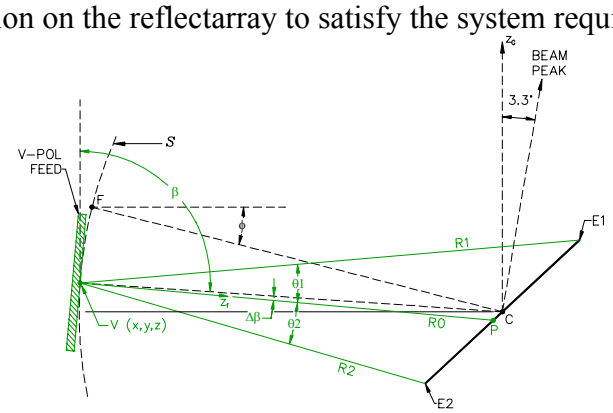

Figure 1. Basic geometry and design parameters (not to scale).

A Taylor amplitude distribution was used for the slot amplitudes in both the azimuth and elevation directions and a cylindrical phase taper was used to focus the beam at the center of the reflectarray to minimize spillover. Once the correct amplitude distributions were established then the waveguide feed network that fed the slots could be designed by combining various waveguide components such as T-splitters and couplers to transfer power between different waveguide layers in the feed. A sampling of these components is shown below in Fig. 2. These components were designed using commercial FEM software.

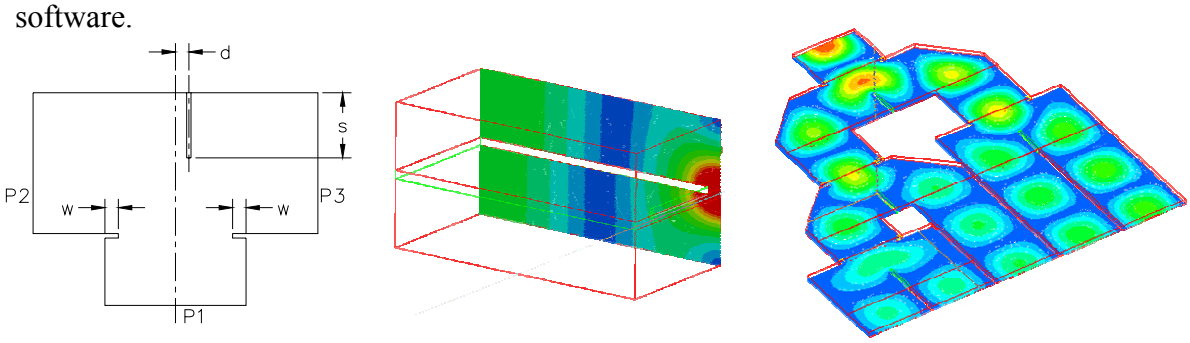

(a) (b) (c)

Figure 2. Waveguide power divider components.
(a) T-splitter. (b) inter-layer series coupler. (c) 5-way power divider.

V-pol Feed

The geometry selected for the radiating layer of the V-pol feed was an offset longitudinal shunt slot array – a total of eighteen 3x1 subarrays. A full-wave moment method technique was used to design the required slot offsets and an eighteen-way power divider with the appropriate power splits and phase delays was designed to provide the correct input excitation to each subarray. The final breadboard configuration consists of four machined aluminum layers with couplers transferring the power between the layers. An exploded view of the V-pol feed showing the different layers is shown in Fig. 3. Silver paint was used to provide electrical contact between the layers for breadboard testing. The flight hardware will use dip-brazed aluminum fabrication to minimize mass and ensure consistent electrical contact between all parts.

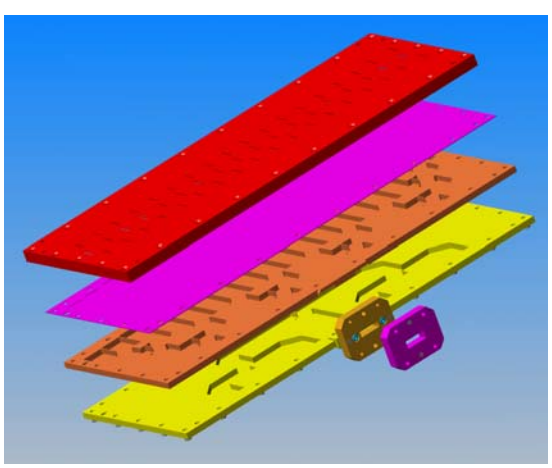

Figure 3. Exploded view of V-pol breadboard feed.

The performance of the assembled V-pol feed was excellent. The input return loss was 24dB and met the specification of 20dB. The measured patterns shown in Fig. 4 agreed very well with those calculated by the moment method. The measured gain of 24.1dB was also in excellent agreement with the calculated gain of 24.2dB. The silver-painted breadboard feed achieved an efficiency of 87%.

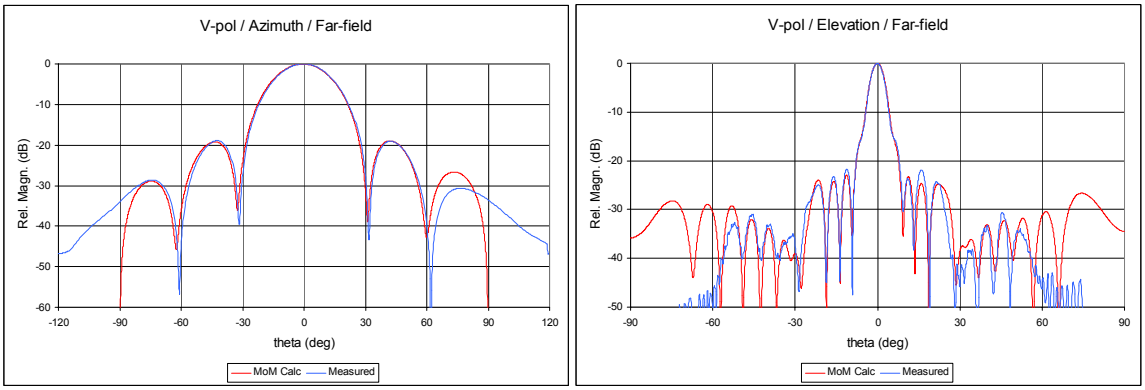

Figure 4. V-pol predicted and measured patterns.

H-pol Feed

A design procedure similar to V-pol was followed for the H-pol feed. The feed geometry selected for the H-pol feed is a 4x16 element array composed of eight 4x2 subarrays. Each 4x2 subarray consists of four 1x2 longitudinal shunt slot subarrays. The 4x2 subarrays are fed from a second layer consisting of eight rows of series-shunt angled coupling slots. An eight-way power divider on a third layer provides the correct amplitude and phase taper to each of the eight angled-slot coupling rows.

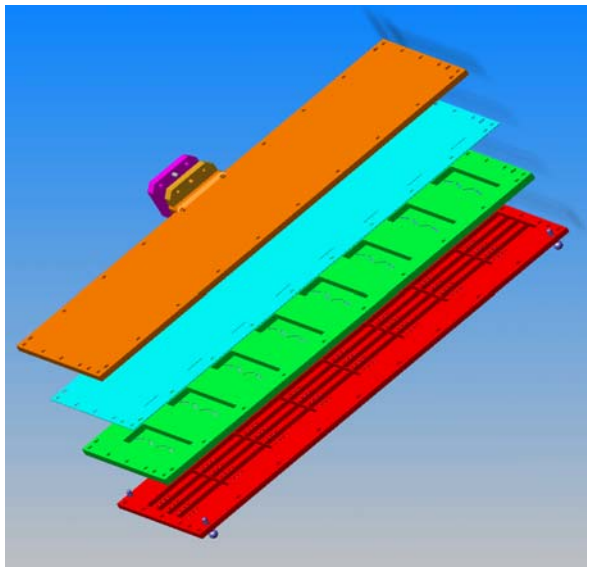

Figure 4. Exploded view of H-pol feed.

The final H-pol configuration consists of four machined aluminum layers with couplers transferring power between layers. An exploded view of the H-pol feed showing the different layers is shown in Figure 4. The measured patterns for the assembled feed are shown in Figure 5. The return loss was 17dB at the design frequency of 13.285GHz but 23dB at 13.385GHz, which can be tuned in a future iteration.

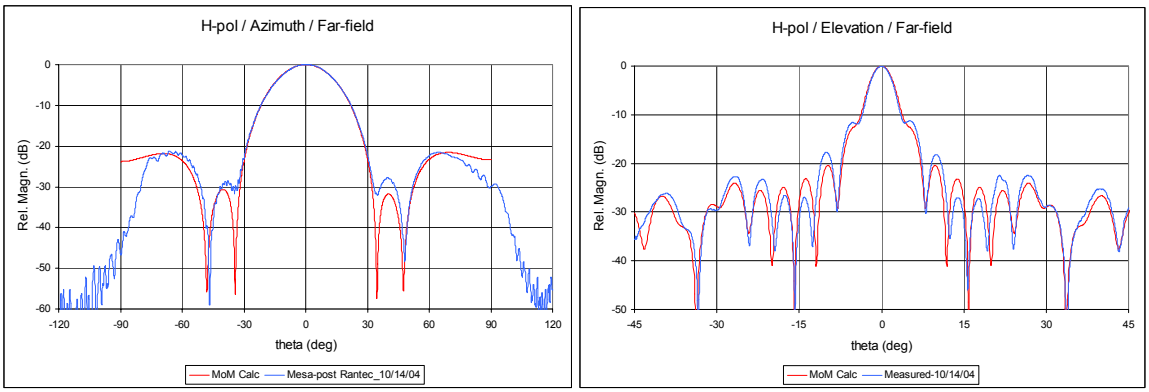

Figure 5. V-pol predicted and measured patterns.

Conclusions

The designs of two waveguide slot arrays used in an offset dual-polarization reflectarray has been presented. Although the design of such arrays is not new, we have shown that remarkably good agreement can be achieved between measurements and calculations in a first iteration using a combination of established slot array design techniques and commercial software for waveguide power divider design.

Acknowledgements

The authors gratefully acknowledge the efforts of Dr. Jefferson Harrell and Robert Beckon, who were responsible for performing the measurements using the NASA/JPL cylindrical near-field chamber. Dr. Harrell also assisted in developing design curves for the power dividers. The efforts of Eric Oakes, Richard Rainen and John Carson from the mechanical group are also appreciated in the development of the breadboard feeds.

The research described in this paper was carried out at the Jet Propulsion Laboratory, California Institute of Technology, under a contract with the National Aeronautics and Space Administration.