Matching Vehicle Responses Using the Model-Following Control Method

Allan Y. Lee
Ms. 198-235
Jet Propulsion Laboratory
California Institute of Technology
Pasadena, California 91109-8099
(818)-354- 4097

Abstract

The Variable Dynamic Testbed Vehicle (VDTV) is presently being developed by the National Highway Traffic Safety Administration (NHTSA). It is being designed to have a "steer-by-wire" front steering system and an independent rear steering system. These Steerillg; systems enable the VDTV to emulate the directional control characteristics of a broad range of passenger vehicles. In this study, a "model-following" control method is used to modify both the steady-state and transient lateral response characteristics of a sIllall-size VDTV to match those of compact-size and lniet-size vehicles. For two classes of steering inputs considered in this study ("pseudo-step" and "sinusoidal"), the model-following control design method allowed the VDTV to accurately and robustly track the lateral responses of the target vehicles over a range of forward Speed.

Key Words: Four-wheel-steering, model-following control method, reference model control method, stem-by-wire, variable dynamic vehicle.

Introduction

'J 'o stud y the correlation between vehicle response characteristics and driver commands relative to crash avoidance, the National Highway Traffic Safety Administration's Office of Crash Avoidance Research (OCAR) has at its disposal a comprehensive set of tools and facilities. These include the Vehicle Research and Test Center, and the (currently being developed) National Advanced Driving Simulator. 'J'o augment these tools and facilities, OCAR has defined its concept of a Variable Dynamic Testbed Vehicle (VDTV).[1] This vehicle will be capable of emulating a broad range of automobile dynamic characteristics, allowing it to be used in developing collision avoidance systems, and conducting drivirl~;-related human factors research, among other applications.

Vehicles with "programmable" response characteristics have been proposed and developed in the past. In the 1970's, an experimental vehicle, called Variable Response Vehicle, was developed by the General Motors Corporation for vehicle handling research.[2] It had independent electro-hydraulically controlled front and rear steering actuators and a front stcerillg;-fee] system. 'J'] ese controlled systems enabled it to emulate a variety of directional control characteristics. In the 1990's, a similar research vehicle, called Simulator Vehicle, was developed by the Nissan Motor Company.[3] Both yaw rate and lateral acceleration response characteristics of this vehicle could be varied independently via software changes to the control algorithms. It was USC(1 to study the relationship between a driver's perception and the actual vehicle handling quality.

To emulate both the lateral and longitudinal response characteristics of a broad range of vc}li-

cles, the "mechanical" steering, suspension, and braking subsystems of a "passive" vehicle must all be made programmable. To emulate the lateral response characteristics of vehicles, an earlier study[4,5] indicated that the VDTV must have a steer-by- wire front steering controlled system and an independent rear steering controlled system (i.e., four-wheel-steering). Equipped with these controlled systems, the lateral response characteristics of the VDTV can be conveniently altered via the governing control algorithms.

In Reference 5, a parameterized feedforward plus feedback four-wheel-steering control algorithm, pictured in Figure 1, was used to alter the lateral responses of the VDTV:[6]

$$\delta_{rc}(s) = K_\delta \left(\frac{1+\tau_1 s}{1+\tau_2 s}\right)\delta_{fc}(s) - K_r r(s) \qquad (1)$$

Here "s" is the Laplace operator, and the variables δ_{fc} and r are the front steering command and the filtered yaw rate of the vehicle, respectively. The feed-forward gain, K_δ, feedback gain, K_r, and the time constants τ_1 and τ_2 of the lead-lag compensator are programmable parameters of this controller. Appropriately selected, these control parameters allowed us to vary the lateral responses of the VDTV to approximate those of target vehicles.

In this study we investigate whether the "emulability" of the VDTV could be improved with an alternative control architecture. In particular, a model-following control method was used to alter both the steady-state and transient lateral responses of a small-size VDTV (a Ford Escort) to match those of a compact-size Buick Skylark as well as those of a mid-size Ford Taurus. The effectiveness and limitations of this control design method in achieving the goal of model matching are reported here.

Vehicle Dynamic Model

A vehicle handling model that the author had developed, VEHDYN, is used in this study. The lateral dynamics of a vehicle are modeled in VEHDYN using the approach suggested in Ref. 7. This model includes vehicle yaw, roll, and lateral

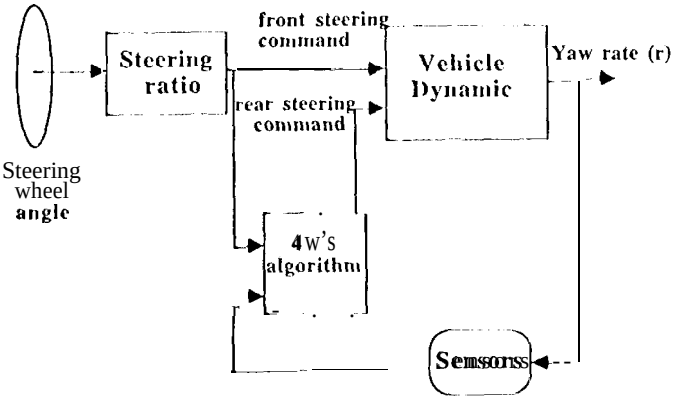

Figure 1: A feedforward plus feedback 4WS algorithm

degrees of freedom. Since the pitch degree of freedom does not significantly affect handling, it was not included in this model. Hence, the states of this vehicle model are: yaw rate, side-slip angle, roll rate, and roll angle.

For simplicity, VEHDYN uses a linear tire model. Lateral forces and aligning torques generated by the tires are computed as functions of tire slip and camber angles. This tire model also includes the effects of vehicle roll angle on both the camber and tire angles. Results obtained with VEHDYN are accurate up to approximately 0.3 g's of lateral acceleration. Beyond that, models that include both the tire saturation effects and suspension nonlinearities must be employed.

In this study, VEHDYN is augmented with the following steering actuator dynamic models:

$$\tau_f \dot{\delta}_f + \delta_f = \delta_{fc} \qquad (2)$$

$$\tau_r \dot{\delta}_r + \delta_r = \delta_{rc} \qquad (3)$$

Here, δ_f and δ_r are the front and rear wheel angles, while δ_{fc} and δ_{rc} are commands sent to the front and rear steering actuators, respectively. The front wheel command δ_{fc} is related to the

driver steering wheel angle δ_{SW}: $\delta_{fc} = \delta_{SW}/N_S$, where N_S is the steering ratio. For two-wheel-steering vehicles, there is no rear wheel command (i.e., δ_{rc} = O). For 4WS vehicles, the rear wheel command is determined by a control algorithm such as that given in equation (1). The time constants of the front and rear steering actuators are τ_f and τ_r, respectively. The bandwidths of these actuators are both assumed to be 15 1 Iz.

Estimated values of vehicle parameters used in VEHDYN, for three passenger sedans are summarized in Table 1. Parameter values in that table are estimated using data given in, among others, Ref. 8. Linearized tire parameters are estimated using data given in Ref. 9, arid are summarized in 'J'able 2.

Table 1: Vehicle Parameters

Vehicle class	Escort small	Skylark compact	Taurus midsize
wheel Last (m)	2.39	2.62	2.69
track width (m)	1.40	1.40	1.55
c.g. to front axle (m)	0.83	0.94	0.95
c.g. height (m)	0.51	0.54	0.56
weight (kg.wt.)	1007	1262	141"9
inertia (kg-m^2)			
1'011	328	431	573
pitch	1535	2032	2553
yaw	1545	2082	2687
1';11	684	828	1206
stiffness† $(\frac{Nm}{deg})$	490	381	935
roll	–		
damping $(\frac{Nms}{deg})$	42.7	53.5	60.1
steering ratio	17.0	17.6	17.0

† frol,t/rear axle.

Model-following Control Design Method

The model-following control design method is sometimes called a reference model control design method. With this method, the desired transient response requirements of a controlled system arc first translated into a transfer function which is the reference model. For example, we might want the percent overshoot (M_p) and 5% settling time (t_s) of the vehicle's yaw rate response to a "step" steering wheel command to be less than 1 0% and 0.5 seconds, respectively. That is:

$$M_p \doteq \exp\{-\frac{\pi\zeta}{\sqrt{1-\zeta^2}}\} \leq 10\% \quad (4)$$

$$t_s \doteq 3/\zeta\omega_n \leq 0.5 \text{ s} \quad (5)$$

where ζ and ω_n arc the damping ratio and natural frequency of a scc.oI]d-order system, respectively. To meet requirements 4 and 5, the reference model must have the following steering wheel angle to yaw rate transfer function:

$$G_{ref}(s) = \frac{r(s)}{\delta_{SW}(s)} = \frac{G_{ref}(0)\omega_n^2}{s^2 + 2\zeta\omega_n s + \omega_n^2} \quad (6)$$

with $\zeta \geq 0.59$, $\omega_n \geq$ 10.2 rad/see, and $G_{ref}(0)$ is the stmcly-state gain of the transfer function. Steering commands that arc applied to the vehicle arc also applied to this reference model. The difference between the outputs of the vehicle and the reference model is used in a control law to drive the vehicle's output to closely approximate the reference model output. In this way the desired transient response requirements arc met.

In the present application, this controller design method is used to force the transient response of the VDTV to closely approximate that of a target vehicle. The reference model is now the transfer function of a particular target vehicle. The idea is illustrate in both Figures 2 and 3 for two- wheel-steering and four- wheel-steering VI)'J'V's, respectively.

'1'able 2: Tire Data

Vehicle	Escort	Skylark	Taurus
tire	P185/ 60R14	P185/ 751{.14	P205/ 65R15
loading†	658	808	917
(kg.wt.)	349	454	502
cornering	**633**	705	1051
stiffness	**433**	509	794
$(\frac{N}{deg})$‡			
aligning			
torque	11.8	14.5	16.4
stiffness	6.3	8.1	9.0
$(\frac{Nm}{deg})$‡			
camber	**21.0**	27.4	54.5
stiffness	9.6	13.2	41.0
$(\frac{N}{deg})$‡			
aligning			
torque/	1.2	1,5	1.6
camber	0.6	0.8	0.9
$(\frac{Nm}{deg})$‡			

† front arid rear wheels,
‡ front and rear wheels, each wheel.

In Figure 2, the VDTV's yaw rate is measured continuoually by a gyroscope and is compared with a desired yaw rate profile. That yaw rate profile is computed on board using the steering wheel angle to yaw rate transfer function of the target vehicle, together with the measured VDTV's steering wheel displacement profile, The deviation between the measured and desired yaw rate profiles is used to control a steer- by - wire servomechanism. In a steer-by-wire arrangement, the steering wheel is mechanically disconnected from the power steering gear and an electrical signal generated by the model-following controller becomes the input to the front steering actuator. In this way the yaw rate response of the VDTV is adjusted continuoually to match that of the target vehicle.

One admissible class of control laws that could be used to implement the above concept is:

$$u(s) = T(s)\,\delta_{SW}(s) - C(s)y(s) \qquad (7)$$

It has one output, u, the control signal to the VDTV's steering actuator, and two inputs, the measured steering wheel command, δ_{SW}, and the measured output, y (e.g., yaw rate). The transfer functions $T(s)$ and $C(s)$ denote the feedforward and feedback controllers, respectively. If $G_V(s)$ denotes the transfer function of the VDTV, from the control input u to the measurement y, then:

$$\begin{aligned} y(s) &= G_V(s)u(s), \\ &= G_V(s)T(s)\delta_{SW}(s) \\ &\quad - G_V(s)C(s)y(s) \qquad (8) \\ \frac{y(s)}{\delta_{SW}(s)} &= \frac{G_V(s)T(s)}{1 + G_V(s)C(s)} \\ &= G_{ref}(s) \qquad (9) \end{aligned}$$

where G_{ref} denotes the input-to-output transfer function of the target (or reference) vehicle. One solution of $T(s)$ that satisfies (9) is: $T(s) = \{G_V^{-1}(s) + C(s)\}\,G_{ref}(s)$. The controller architecture that implements this particular solution is summarized by the following equations and depicted in Figure 2.

$$y_{ref}(s) = G_{ref}(s)\delta_{SW}(s) \qquad (10)$$

$$u(s) = \overbrace{G_V^{-1}(s)G_{ref}(s)}^{feedforward}\delta_{SW}(s) - \underbrace{C(s)}_{feedback}\{y(s) - y_{ref}(s)\} \qquad (11)$$

An advantage of using the feedforward controller is to achieve quick system responses to steering wheel commands. The feedback controller will ensure good tracking, even in the presence of external disturbances.

Instead of using the vehicle yaw rate measurement, other vehicle's measurements such as its lateral acceleration (at the vehicle's c.g.), sideslip angle (at the front or rear bumper), and roll angle could also be used. Lateral acceleration is measured using an accelerometer, and sideslip angle is measured using an optical sensor.

In Figure 3, a model-following controller for a VDTV with both the steer-try-wire and four-wheel-steering servomechanisms is illustrated. Here, both the VDTV's yaw rate and lateral acceleration are measured and compared with their

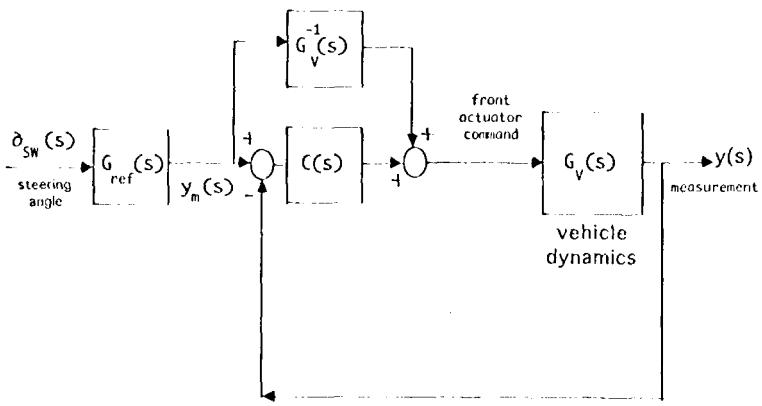

Figure 2: A model-following VDTV with SBW

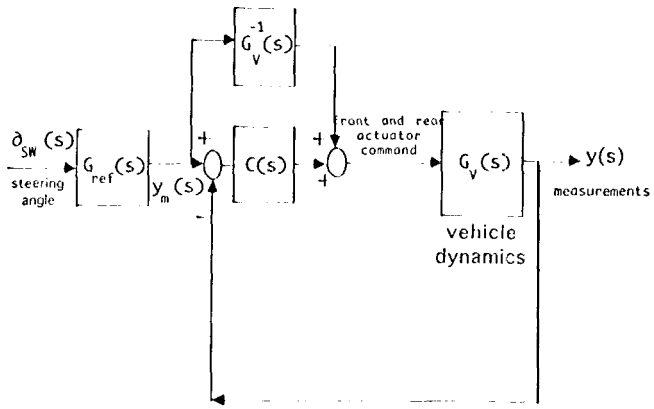

Figure 3: A model-following VDTV with SBW and 4WS

counterparts that are computed on board using two transfer functions: steering wheel angle to yaw rate and steering wheel angle to lateral acceleration. Errors between the desired and measured vehicle's yaw rate and lateral acceleration are used to control both the front and rear steering actuators. The implementation of this model-following controller is relatively more involved, but typically yields better results (see "Emul - tion Results").

Implementation Issues

The following issues must be considered in implementing the model-following controller.

- **Using nonlinear approximate vehicle models.**

  The block diagram depicted in Figure 2 is useful for explaining the model-following concept, but the system cannot be implemented as it is shown in that figure. This is because the inverse VDTV vehicle model G_V^{-1} (s) is generally not realizable. However, the cascade combination of the target vehicle model and the inverse VDTV vehicle model in the following equation is realizable ii' the relative order of $G_{ref}(s)$ (the degree of $G_{ref}(s)$'s denominator polynomial - the degree of $G_{ref}(s)$'s numerator polynomial) is larger than that of $G_V(s)$.

  Earlier 011, we mentioned that one advantage of using the feedforward controller is to achieve fast vehicle responses to steering wheel commands. This advantage is retained even if we use reduced-order approximations of the transfer functions $G_{ref}(s)$ and $G_{ref}(s)G_V^{-1}$ (s). Also, notice that both the reference vehicle model and the inverse W) DTV model could be nonlinear without causing any stability problem because they only appear in the feedforward path. Accordingly, the model-following design methodology is equally applicable in situations where it is important for the VDTV to track important nonlinear dynamic behavior of the target vehicle (e.g., load transfer and tire force saturation in high-g maneuvers).

- Nell-1~-li~lil~lllIl~ **phase systems.**

  Let $G_V(s) \triangleq N_V(s)/D_V(s)$, where **N"(s)** and $D_V(s)$ are the numerator and denominator of the VDTV transfer function, respectively. Similarly, let $G_{ref}(s) \triangleq N_{ref}(s)/D_{ref}(s)$, $T(s) \triangleq N_T(s)/D_T(s)$, and

$C(s) \triangleq N_C(s)/D_C(s)$. Substituting these relations into equation (9) give:

$$\frac{N_V(s)N_T(s)D_C(s)}{D_T(s)\{D_V(s)D_C(s) + N_V(s)N_C(s)\}} = \frac{N_{ref}(s)}{D_{ref}(s)} \quad (12)$$

Looking at the numerators on both sides of the equation, if a factor of $N_V(s)$ is not a factor of N_{ref} (s), then it must be a factor of $D_T(s)\{D_V(s)D_C(s) + N_V(s)N_C(s)\}$. That is, it must be cancelled by a closed-loop pole. Since the closed-loop system must be stable, it follows that only stable zeros of $N_V(s)$ may be cancelled. Hence, the proposed model-following methodology does not work with a G_V (s) that has one or more unstable zero's (non-minimum phase system). The transfer function of the VDTV's steering wheel to sideslip angle, at high speed, is non-minimum phase. Hence, special care must be taken in using the sideslip angle measurement in the model-following control method.

- **Sensitivity to modeling errors.**

It is unrealistic to assume that the VDTV model used in the feedforward path of the model-following controller is highly accurate. Therefore, it is important to understand how modeling errors will influence the closed-loop stability properties of the controlled vehicle. To this end, let us assume that the model-following design is based on a VDTV's transfer function $G_V(s)$. Let us further assume that the true model of the VDTV is $G_V^0(s)$. It was proven in Reference 10 that the closed-loop system is stable if the modeling error is bounded as follows:

$$|G_V(j\omega) - G_V^0(j\omega)| \leq |C(j\omega)|^{-1} \quad (13)$$

where $|R|$ denotes the modulus of the complex number R.

One way to interpret this inequality constraint is as follows. Let $C(s) = K_P$, a simple proportional controller. The following trade-off must then be made in selecting K_P:

- If K_P is large, the closed-loop bandwidth is increased, and the VDTV output will track that generated by the target vehicle model very closely. However, the error between the true VDTV model and that used in the model-following controller must be very small to ensure closed-locq) stability.

- If K_P is small, the requirement 011 model accuracy is relaxed, 11 owcvcr", the resultant VDTV output might not track that of the target vehicle model very well.

- Model-following **Index.**

In this study, the "model-following" quality of the controller is determined using the following time-domain performance criterion J_y:

$$J_y \triangleq \frac{\int_0^T \{y(t) - y_{ref}(t)\}^2 dt}{\int_0^T y_{ref}^2(t) dt} \quad (14)$$

Here, $y(t)$ is the VDTV response to a steering command $\delta_{SW}(t)$, and $y_{ref}(t)$ is that of the reference vehicle Model. Two classes of steering commands arc used in this study. The first class consists of step steering commands. Since a true step is physically impossible, the steering command is ramped to its stead - state value at an uniform rate of 120 degrees per second. The resultant maneuver is commonly called a J-turn maneuver. The second class consists of sinusoidal steering commands. This class of steering commands is used frequently in lane change maneuvers.

The integration time T in J_y is a characteristic time associated with the steering command. For pseudo step steering commands, T is selected to be 2 seconds. This time duration is longer than the settling time of either the Skylark or Taurus yaw rate responses to a step steering command. For sinusoidal steering commands, T is the period of the sinusoidal steering profile.

The performance index J_y is small if $y(t)$ tracks $y_m(t)$ very closely. Since the feedforward component of the model-following controller is fixed by the VDTV and reference

vehicle models, the feedback controller $C(s)$ is the only means that we can use to minimize J_y. Simple proportional plus integral controllers ($C(s) = K_P + K_I/s$) are used in this study. The proportional gain K_P was iteratively adjusted to achieve small J_y's for both classes of steering commands.

- **Gain scheduling the controller gains.**

  Vehicle transfer functions, from the steering wheel angle to both vehicle yaw rate and lateral acceleration, are functions of vehicle forward speed. For example, the lateral acceleration gains of Taurus (steady-state lateral acceleration in g's per 50 degrees of steering wheel angle excursion) at forward speeds of 80, 100, and 120 km/hr are 0,46, 0.56, and 0.64 g/deg, respectively. To achieve optimal model-following results, there might be a need to gain-schedule the controller gains K_P and K_I as functions of the vehicle forward speed.

  One way to synthesize the feedback controller $C(s)$ is to determine the optimal values of K_P and K_I over a speed range of interest. A look-up table can then be constructed from which appropriate values for K_P and K_I are determined, based upon the measured vehicle forward speed. A simpler method is used in this study in which a compromised set of K_P and K_I is determined and used for the entire range of vehicle speeds. This approach greatly simplifies the implementation of the controller.

Emulation Results

Three production vehicles were used in this study because they span a broad range of passenger vehicles: Small-size Escort, compact-size Skylark, and Mid-size Taurus. The small-size Escort was selected as the Variable Dynamic Vehicle, and is used to emulate the lateral response characteristics of the Skylark and Taurus. Comparisons of pseudo-step responses of the Skylark to those of the VDTV are given in Figures 4, 5, and 6 for controllers using yaw rate, acceleration, as WC]] as yaw rate and acceleration measurements, respectively. Emulation results obtained with the Taurus are given in Figures 7-9. For brevity, time response results obtained using other measurements, and those obtained with sinusoidal steering commands are not given here.

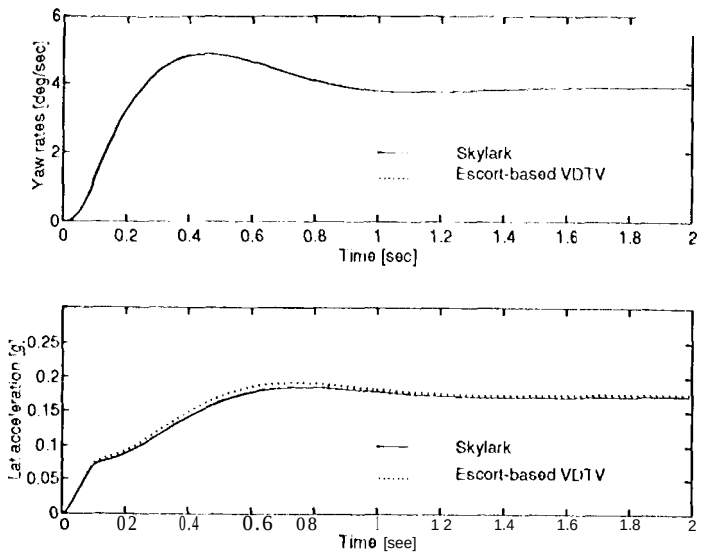

Figure 4: Skylark emulation results (yaw rate)

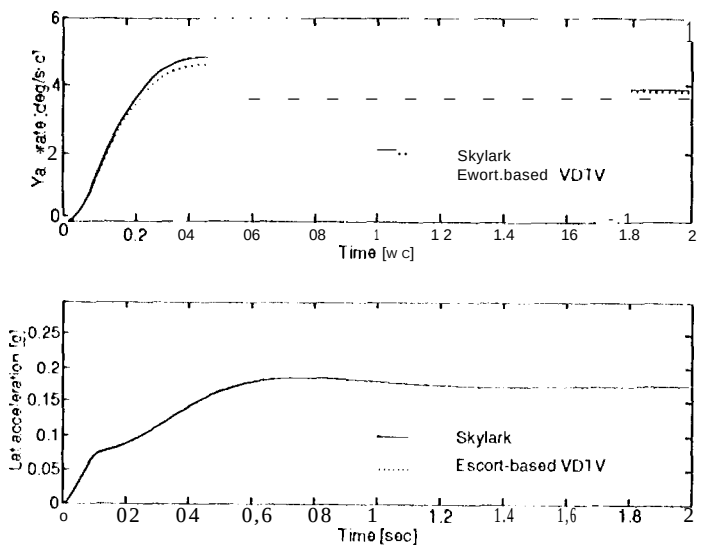

Figure 5: Skylark emulation results (acceleration)

All the results depicted in Figures 4-9 are obtained at a forward speed of 100 km/hr. The effectiveness of the model following controllers can be judged by computing the indices J_r and $J_{a_{yy}}$. The magnitudes of these indices for both the Skylark and Taurus pseudo-step responses, over a speed range from 80 to 120 km/hr, are sum-

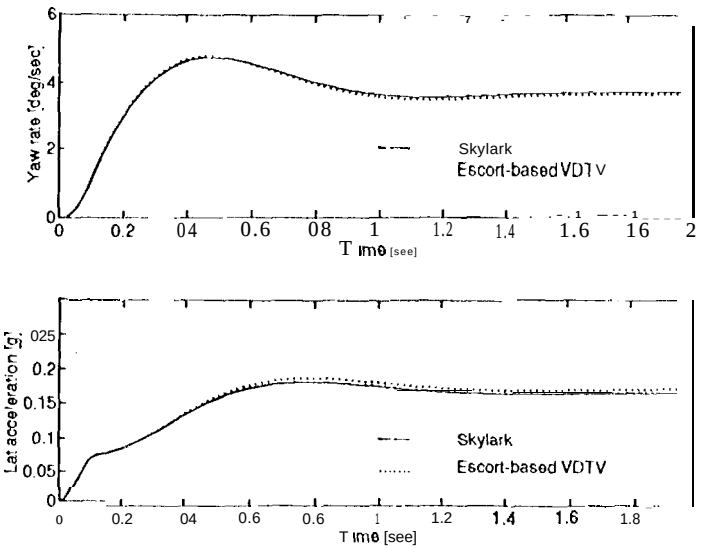

Figure 6: Skylark emulation results (yaw rate and acceleration)

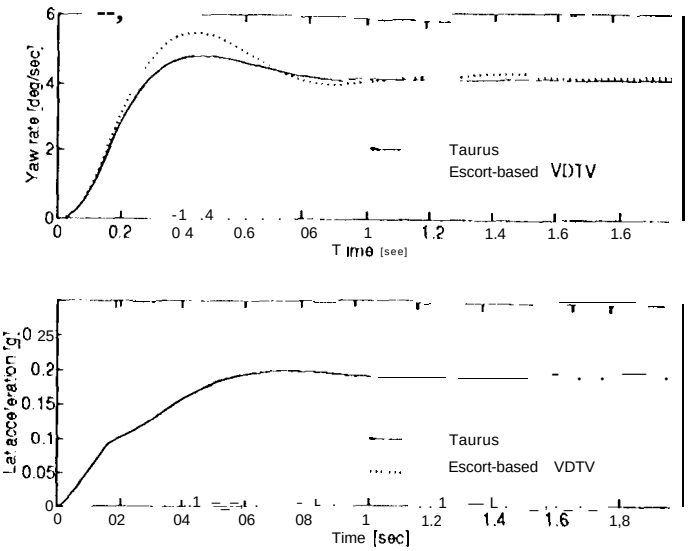

Figure 8: Taurus emulation results (acceleration)

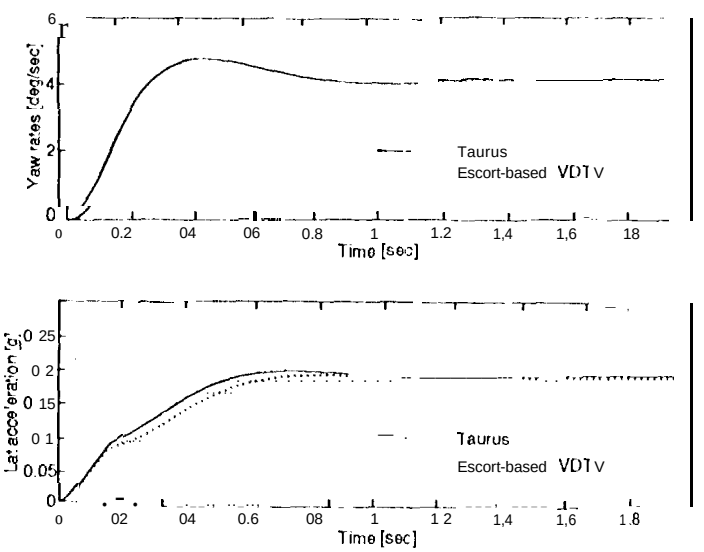

Figure 7: Taurus emulation results (yaw rate)

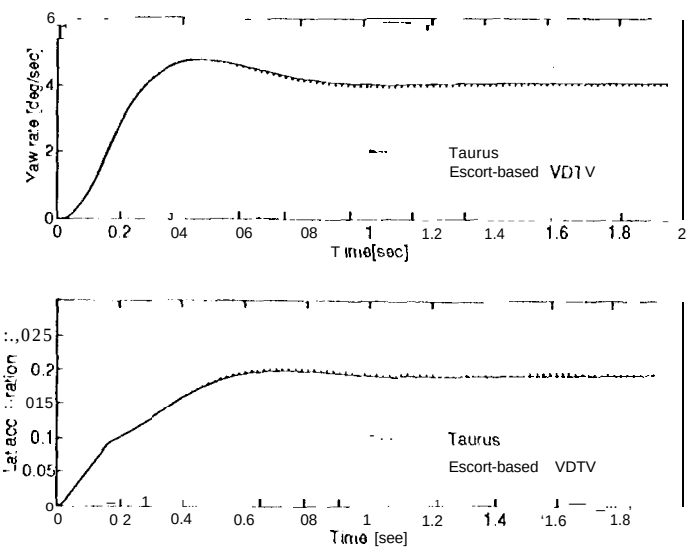

Figure 9: Taurus emulation results (yaw rate and acceleration)

marized in Table 3. Model-following indices for vehicle responses to 0.25-Hz sinusoidal steering commands are summarized in Table 4.

From Figures 4-9 and Tables **3-4,** we make the following observations:

- **Effect of vehicle measurements used in the feedback loop**

  If yaw rate measurement is used, the resultant J_r is close to zero (i.e., perfect matching of the VDTV's and target vehicle's yaw rate responses). The corresponding $J_{a_{yy}}$ is larger than J_r. If, instead, the lateral acceleration measurement is used, then $J_{a_{yy}}$ is close to zero while that of J_r is larger. A VDTV with both yaw rate and acceleration feedbacks has small model-following indices for both yaw rate and acceleration.

- **Using roll angle measurements in the feedback loop**

  Emulation results obtained using the roll angle measurement are given in Tables 3 and 4. The model-following index of the vehicle roll angle (J_ϕ) obtained, not given in Tables 3 and 4, is very close to zero. However, the corresponding J_r and $J_{a_{yy}}$ are very large when compared with those obtained with measurement of yaw rate, lateral acceleration, or both. This is not unexpected, and may be explained as follows. At a forward speed of 100 km/hr and with a 50-degree steering wheel angle excursion, the steady-state yaw rate, acceleration, and roll angle of an Escort are 13.24 deg/s, 0.603 g, and -2.89 deg, respectively. The corresponding values for Skylark are 10.71 deg/s, 0.477 g, and -2.83 deg. Ratios of these two sets of vehicle steady-state values are: 0.81 for yaw rate, 0.79 for acceleration, and 0.98 for roll angle. Note that the gain ratio for yaw rate and that for lateral acceleration are almost identical. Hence, matching the yaw rate responses of the vehicles is equivalent to matching their lateral acceleration responses, at least in the steady state. This explains why both J_r and $J_{a_{yy}}$ are small when we use only the yaw rate or only the lateral acceleration measurement in the feedback loop. On the other hand, the ratio for roll angle and that for yaw rate (or lateral acceleration) are very different. If the VDTV steering angle is controlled to achieve perfect matching in vehicle roll responses, the corresponding matchings of the yaw rate and lateral acceleration responses cannot be good. Hence, roll angle measurement should only be used if the main objective of the vehicle emulation is to achieve perfect matching in vehicle roll responses.

- **Using sideslip angle measurements in the feedback loop**

  At a forward speed of 100 km/hr, the transfer function of the VDTV's steering wheel to sideslip angle is non-minimum phase. This is true regardless of whether the sideslip angle is measured at the front or rear bumper. If the sideslip angle is measured at the front, the transfer function zeros are: -1 **3.20** and -14.01±9.57j rad/s. Hence, it is a non-minimum phase system! However, transfer functions at all vehicle speeds below 85 km/hr are minimum phase. For example, at a forward speed of 60 km/hr, the zeros are: -3.29 and -13.693 7.56j rad/s. Hence, the sideslip angle measurement could be used in the model-following controller for vehicle speeds between 40 and 60 km/hr (cf. Tables 3 and 4). Emulation results obtained using the sideslip angle measurement are reasonably good for Skylark. Those obtained with the Taurus are poor. This is explained as follows.

  At a forward speed of 60 km/hr, and with a given steering wheel angle excursion, we can easily determine the steady-state values of the Escort's yaw rate, sideslip angle, and lateral acceleration. Those for the Skylark and Taurus could also be similarly computed. Ratios between Skylark's and Escort's steady-state values are: 0.90 for yaw rate, 0.88 for acceleration, and 0.80 for sideslip angle. Ratios between Taurus's and Escort's steady-state values are: 0.91 for yaw rate, 0.92 for acceler-

ation, and 1.39 for sideslip angle. Note that the three ratios between Skylark and Escort yaw rate, sideslip angle, and lateral acceleration values are very close to one another. Hence, matching the vehicles' sideslip angle responses is equivalent to matching their yaw rate and lateral acceleration responses, at least in the steady-state. 011 the other hand, the ratio between the Taurus and Escort sideslip angles deviates significantly from those of the yaw rate and lateral acceleration. Hence, the Taurus's J_r and $J_{a_{yy}}$ obtained using the sideslip angle measurement are large.

Complementary filter.

The controller structure depicted in Figure 2 dots not guarantee performance robustness against uncertainties in the plane model $G_V(s)$. To achieve model-following, even in the presence of uncertainties, we use the "complementary filter" approach discussed and used in Reference]] in this study. See also the "modeling error compensation" controller approach discussed in Reference 12.

III the modified controller architecture pictured in Figure 10, a nominal control architecture with feedforward and feedback controllers is designed using steps described above. An additional feedback loop (within the shaded area) is added to this baseline design to compensate for modeling errors between the true and nominal VDTV models. The complementary filter produces an additional feedback signal that is computed using the input and output signals of the VDTV $G_V^0(s)$, the nominal VDTV model $G_V(s)$, as w c]] as the transfer function K_H (s):

'J'able 3 Model-following indices for pseudo-step steering commands

Measurement(s)	Speed (km/hr)	Skylark (%)	Taurus (%)
r		J_r	
	80	0	0
	100	0	0
	120	0	0
		$J_{a_{yy}}$	
	80	0.06	0.17
	100	0.08	0.20
	120	0.11	0.24
a_{yy}	xo-	0 . 0 6	0.29 "'-"
	100	0.10	0.41
	120	0.14	0.57
	80	0	0
	100	0	0
	120	0	0
r & a_{yy}	80	0.30"	0.02
	100	0.03	0.02
	120	0.01	0.01
	80	0.03	0
	100	0.08	0.01
	120	0.01	0.02
ϕ	80	4.18	2.99
	100	4.13	2.97
	I 20	4.07	2.96
	80	5.39	3.65
	100	5.41	3.65
	120	5.42	3.65
β	40	0.06	2.02
	50	0.22	3.79
	60	0.84	8.21
	4 0	0.03	1.39
	50	0.11	2.89
	60	0.61	6.76

r: yaw rate,
ϕ: 1"011 angle,
β: sideslip angle at front bumper,
a_{yy}: lateral acceleration at vehicle's e.g.

'1'able 4 Model-following indices for sinusoidal steering comn ands

Measurement(s)	Speed (km/hr)	Skylark (%)	Taurus (%)
r		J_r	
	80	0^+	0^+
	100	0^+	0^+
	120	0^+	0^+
		$J_{a_{yy}}$	
	80	0.07	0.26
	100	0.11	0.33
	120	0.15	0.41
a_{yy}	80	0.07	0.30
	100	0.11	0.39
	120	0.15	0.51
	80	0^+	0^+
	100	0^+	0^+
	120	0^+	0^+
r & a_{yy}	80	0.04	0.03
	100	0.04	0.04
	120	0^+	0.01
	80	0.27	0^+
	100	0.08	0.01
	120	0.02	0.02
ϕ	80	4.47	3.41
	100	4.43	3.39
	120	4.36	3.37
	80	5.71	3.80
	100	5.73	3.80
	120	5.74	3.79
β	40	0.09	2.11
	50	0.30	4.03
	60	1.14	8.85
	40	0.04	1.70
	50	0.20	3.50
	60	0.99	8.13

$$H(s) = \frac{K_H}{(1+\tau_H s)^N} G_V^{-1}(s) \qquad (15)$$

where K_H is a constant. The factor $(1+\tau_H s)^N$ (where $N \geq$ the relative degree of the transfer function $G_V(s)$) in the denominator of $H(s)$ is used to ensure that the resultant compensator $H(s)$ is realizable. Since it is desirable to avoid having high gain at high frequency, the time constant τ_H is selected to be about ten times the time constant of the VI) TV's lateral responses ($\tau_H \doteq 10$ msec). The advantage of this multi-p]c feedback-loop architecture is that the nominal controller and the complementary filter could be designed independently. The computational requirement is also reasonable.

To illustrate the effectiveness of the complementary filter, consider the scenario when the Escort-based VDTV is used to emulate the lateral dynamics of Skylark using the yaw rate measurement. At a forward speed of 100 km/hr, and when the Escort model is known exactly, the magnitudes of the model following indices arc: $J_r = 5.03 \times 10^{-11}\%$ and $J_{a_{yy}} = 0.08\%$ (cf. '1'able 3 and Figure 4). Consider now the scenario when the actual Escort model ($G_V^0(s)$) has the following deviations from the Escort model used in the feedforward controller (G_V (s)): 40% increase in both the vehicle weight and yaw moment of inertia, 30% drop in the front tire cornering stiffness, and 30% increase in the rear tire cornering stiffness. The resultant model-following indices have the following significantly degraded values: $J_r = -0.74\%$ and $J_{a_{yy}} = 1.02\%$ (cf. Figure 11). The situation is partially rectified using a complementary filter with $K_H = 1$. The resultant model-following indices arc: $J_r = 0.0009\%$ and $J_{a_{yy}} = 0.037\%$. The effectiveness of the complementary filter is vividly illustarted in Figure 11.

Conclusions

The "model-following" design method was used in this study to generate feedback and feedforward controllers for uscs with a variable dynamic vehicle configured with steer-by-wire and/or the four- wheel-steering. Using measurements of yaw rate and/or lateral acceleration, this control design method enabled the variable dynamic vehicle to accurately track the lateral responses of a target vehicle to both step and sil)usoidal steering commands. Performance degradation due to modeling uncertainties was addressed by the introduction of a second "complementary" feedback loop. Our results indicate that the proposed system is a good candidate controller in modifying the lateral response characteristics of a variable dynamic vehicle to mimic those of a target vehicle.

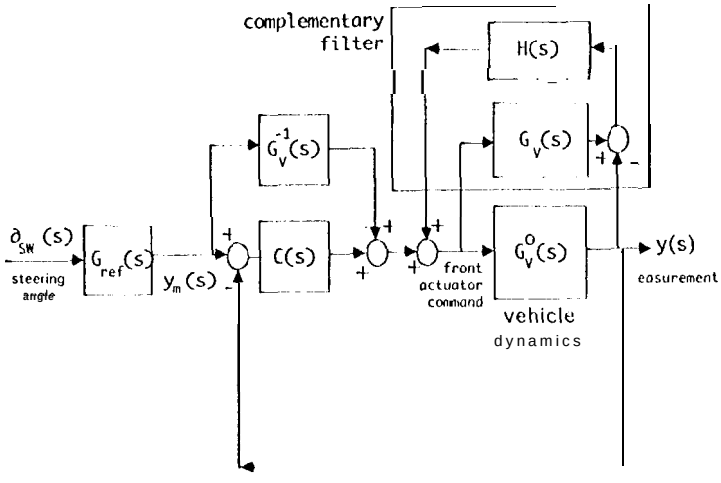

Figure 10: A model-followillg controller with a complementary filter

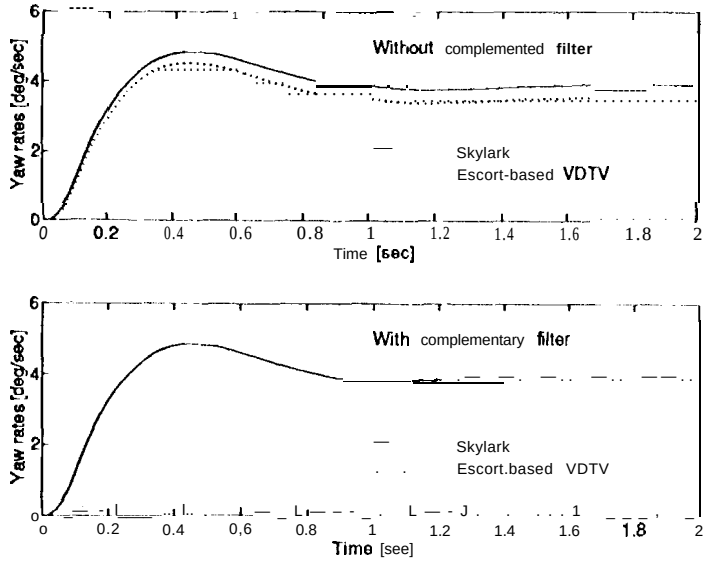

Figure 11: Skylark off-nominal emulation results obtained with and without a complementary filter

Acknowledgments

The research described in this paper was carried out by the Jet Propulsion laboratory, California Institute of Technology. It was sponsored by the National Highway Traffic Safety Administration through an agreement with the National Aeronautics and Space Adminstration. The author wishes to thank A. Marriott, his colleague at Jet Propulsion laboratory, for many helpful discussions. This research was conducted under the technical direction of 1,. Emery of the National Highway Traffic Safety Adminstration. All errors are my responsibility.

Disclaimer

The discussion] in the text of this paper reflects the opinions and findings of the author, and not necessarily those of the Jet Propulsion Laboratory or the National Highway Traffic Safety Adminstration.

References

1. Leasure, W. A., Jr., "The NHTSA Collision Avoidance Program," IVHS America Workshop 011 Collision Avoidance, Reston, Virginia, April 21-22, 1994.

2. McKenna, K. J., "A Variable Response Vehicle Description and Applications," Joint Automatic Control Conference, Austin, Texas, June 19 21, 1974.

3. Sugasawa, F., Irie, N., and Kuroki, J., "Development of A Simulator Vehicle for Conducting Vehicle Dynamics Research," International Journal of Vehicle Design, Vol. 13, No. 2, pp.159 167, 1992.

4. Marriott, A., "Variable Dynamic Testbed Vehicle," SAE 950036, 1995.

5. Lee, A.Y., "Emulating the Lateral Dynamic of A Range of Vehicles Using A Four-Wheel-Steering Vehicle," SAE 950304. (See also SAE S1'-1074, "New Development in Vehicle Dynamics, Simulation, and Suspension Systems," pp. 11-22, 1995.)

6. Lee, A.> '., "Vehicle Stability Augmentation Systems 1 Designs for 1"our-Wheel-Steeriilg Vehicles," ASME Journal of Dynamical Systems, Measurements and Control, Vol. 112, No. 3, September 1990.

7. Bundorf, 1{.'1'., and Leffert, R.L., "The Cornering Compliance Concept for 1 Description of Directional Control (1 Iandling) Properties," SAE 760713, 1976.

8. Garrett, W.R., "Measured Vehicle Inertia Parameters - NHTSA's Data Through September 1992," SAE 930897, 1993.

9. Heydinger, G. J., "Vehicle Dynamics Simulation and Metric Computation for Comparison With Accident Data," National Highway Traffic Safety Administration, DOT 11S 807 828, Final Report, March 1991.

10. Åström, K.J. and Wittenmark, B., " Computer Controlled Systems: Theory and I Design," Prentice Hall, Inc., Englewood Cliff's, NJ 07632, 3rd edition, 1984.

11. Tamaki, K., Kiyoshi, O., Ohnishi, K., and Miyachi, K., "Micro-processor Based Robust Control of a 1 DC Servo Motor," IEEE Control Systems Magazine, pp. 30-36, October 1986.

12! Sun, J., Olbrot, A. W., and Polis, Ml>., "Robust Stabilization and Robust Performance Using Model Reference Control and Modeling Error Compensation," IEEE Transactions 011 Automatic Control, Vol. 39, No, 3, pp. 630 635, March 1994.