THE VISUAL AND INFRARED MAPPING SPECTROMETER FOR CASSINI

Edward Miller, Gail Klein, David Juergens,
Kenneth Mehaffey, Jeffrey Oseas, Ramon Garcia, Anthony Giandomenico,
Bob Irigoyen, Roger Hickok, David Rosing, Harold Sobel, Carl Bruce
JET PROPULSION LABORATORY
Pasadena, California

Enrico Flamini
AGENZIA SPATIALE ITALIANO
Rome, Italy

Romeo DeVidi, Francis Reininger, Michele Dami
OFFICINE GALILEO
Florence, Italy

Alain Soufflot, Yves Langevin
CENTRE NATIONAL DE LA RESEARCHE SCIENTIFIQUE
Institut d'Astrophysique Spatiale
Paris, France

Gerard Huntzinger
DESPA
Observatoire de Meudon
Paris, France

ABSTRACT

The Visual and Infrared Mapping Spectrometer (VIMS) is a remote sensing instrument developed for the Cassini mission to Saturn by an international team representing the national space agencies of the United States, Italy, and France. A dual imaging spectrometer, VIMS' unique design consists of two optical systems boresighted and operating in tandem, coordinated by a common electronics unit. The combined optical system generates 352 two dimensional images (64 x 64 0.5 mrad pixels) simultaneously, each in a separate, contiguous waveband. These are combined by the electronics to produce "image cubes" in which each image pixel represents a spectrum spanning 0.3 to 5.1 microns in 352 steps. VIMS images will be used to produce detailed spatial maps of the distribution of mineral and chemical species of Saturn's atmosphere, rings, and moons, and the atmosphere of Titan. At sonic wavelengths VIMS will penetrate Titan's atmosphere to map its surface. and image the night side of many Saturnian objects.

Keywords: imaging spectrometers, Cassini, planetary, multispectral, infrared, visible, CCD, InSb

1. INTRODUCTION

In the late 1970s JPL produced the first imaging spectrometer built for planetary exploration, the Near Infrared Mapping Spectrometer (NIMS) for the Galileo mission now operating in orbit around Jupiter. In subsequent years, JPL studied ways to improve the technology and produced designs for other planetary applications[1]. Similar projects were also under way in France, and later Italy and the Soviet Union. These efforts led to the deployment of the French ISM[2] instrument on the Soviet Phobos missions (which produced the first actual planetary imaging spectrometer data) and the international OMEGA instrument on the impending Russian-ESA Mars 96 mission, in which JPL had early participation. The Cassini VIMS instrument, along with the OMEGA instrument, emerged from an international program which began as a collaboration of these countries to produce three instruments; the OMEGA instrument, a VIMS for a comet-rendezvous asteroid flyby (CRAF) mission, and the Cassini VIMS[3]. Of the three, OMEGA and Cassini VIMS survived to be successfully built and both are to be launched within the next 18 months. Although NASA withdrew from the OMEGA Mars program early on, OMEGA and VIMS share a common design heritage and remain a testament to the value of international collaboration and to the growing commitment of international planetary scientists to imaging spectroscopy. Herein, we discuss the final design in detail and present preliminary performance data from the Cassini VIMS.

Conceived and built in an era of increasing concern for budget and schedule, several aspects of the VIMS design resulted in a lower overall cost and reduced schedule, without impacting its performance requirements. This included the use of an existing spare NIMS optics, opto-mechanical structure, and passive cooler, and some electronics designs from the OMEGA mission. One important factor in reducing cost was the international Collaboration, which will result in complete science return for each of the participating countries at a total cost to each one of a fraction of the cost of building a complete VIMS.

2. SCIENTIFIC OBJECTIVES

The primary purpose of the Cassini VIMS instrument is to provide two dimensional, high resolution multispectral images which will enable detailed study of the composition and distribution of surface materials on the Saturnian satellites (particularly dark material and volatile), the compositional structure of the atmosphere and clouds of Saturn, the nature and composition of Saturn's rings, and the distribution and composition of the atmosphere and surface of Titan. The combination of high spectral and spatial resolution will enable the correlation of identified materials with geophysical structure, and will greatly advance the understanding of the Saturn system. Specifically, VIMS will enable the study of[4,5,6]

Icy Saturnian Satellites:

- The composition and distribution of surface materials, especially of dark, organic rich deposits and volatiles.
- The correlation of composition with morphology
- The photometric and thermal properties.

Saturnian Rings:

- The specific morphology and composition of the rings.
- The distribution and assessment of particle sizes.
- The radial optical depth profile of the rings.
- The temporal variation of ring structure and composition.
- The distribution and composition of dust in the rings.
- The correlation between satellite and ring composition.

On Saturn:

- The composition and distribution of atmospheric and cloud species.
- The temporal behavior of winds, eddies, and other features.
- The internal structure and rotation of deep atmospheric features.
- The spatial distribution of temperatures.
- The vertical optical extinction profile of the Saturnian atmosphere.
- The nature of Saturnian lightning.

Titan:

- The composition and distribution of atmospheric species and aerosols.
- The assessment of Titanian atmospheric circulation and physics.
- The vertical optical extinction profile of the Titanian atmosphere.
- The geology and geomorphology of Titan's surface.
- The nature of active volcanism and lightning.

In addressing these science goals, VIMS addresses or enhances a majority of the science objectives of the Cassini mission. Working in concert with the other Cassini instruments, VIMS will be a critical tool for multidisciplinary research.

3. INSTRUMENT OVERVIEW

VIMS mounts to the Cassini Remote Sensing Pallet (RSP) as two assemblies (Figure 1), The Optical Pallet Assembly (OPA) and the Main Electronics Assembly (ME). The OPA is composed Of the two imaging spectrometers and their respective signal processing electronics packages and a large thermal "bus shield" structure, bolted to a common structure called the Pallet. The OPA is thermally balanced to achieve what will be the coolest part of the Cassini spacecraft, the IR focal plane (at 60 Kelvin). The OPA is linked by a set of thermally-balanced cables to the ME, mounted on the back of the RSP. The ME, containing several electronic subassemblies, governs all functions of the OPA and serves as the scale interface to the spacecraft.

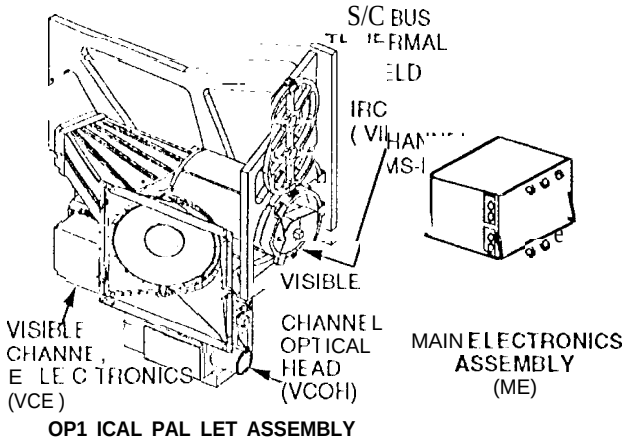

Figure 1. The Cassini VIMS Instrument.

The two imaging spectrometers on the OPA are the Infrared Channel (VIMS-IR), which was built by JPL for NASA, and the Visible Channel (VIMS-V), built by Officine Galileo for the Italian Space Agency, Agenzia Spaziale Italiana (ASI). VIMS-V has two subassemblies: a visible imaging spectrometer called the Visible Channel Optical Head (VCOH) and an electronics unit called the Visible Channel Electronics (VCE). The ME was built by JPL as well, and includes electronic subassemblies provided by Centre National D'Researches Spatiales (CNRS) of France. The instrument design is represented by a functional block diagram in Figure 2., with detailed design specifications identified in Table 1.

VIMS-IR has two subassemblies: an infrared imaging spectrometer (the IR Channel) and its Signal Processing Electronics (SPE). In addition to providing signal processing for the IR Channel, the SPE relays data from the Visible and IR Channels to the ME. It thus serves as the single interface between the OPA and the ME. The OPA is controlled entirely from the ME, which coordinates the operation of the two channels, combines, compresses, and packetizes their data, and handles all traffic between VIMS and the spacecraft.

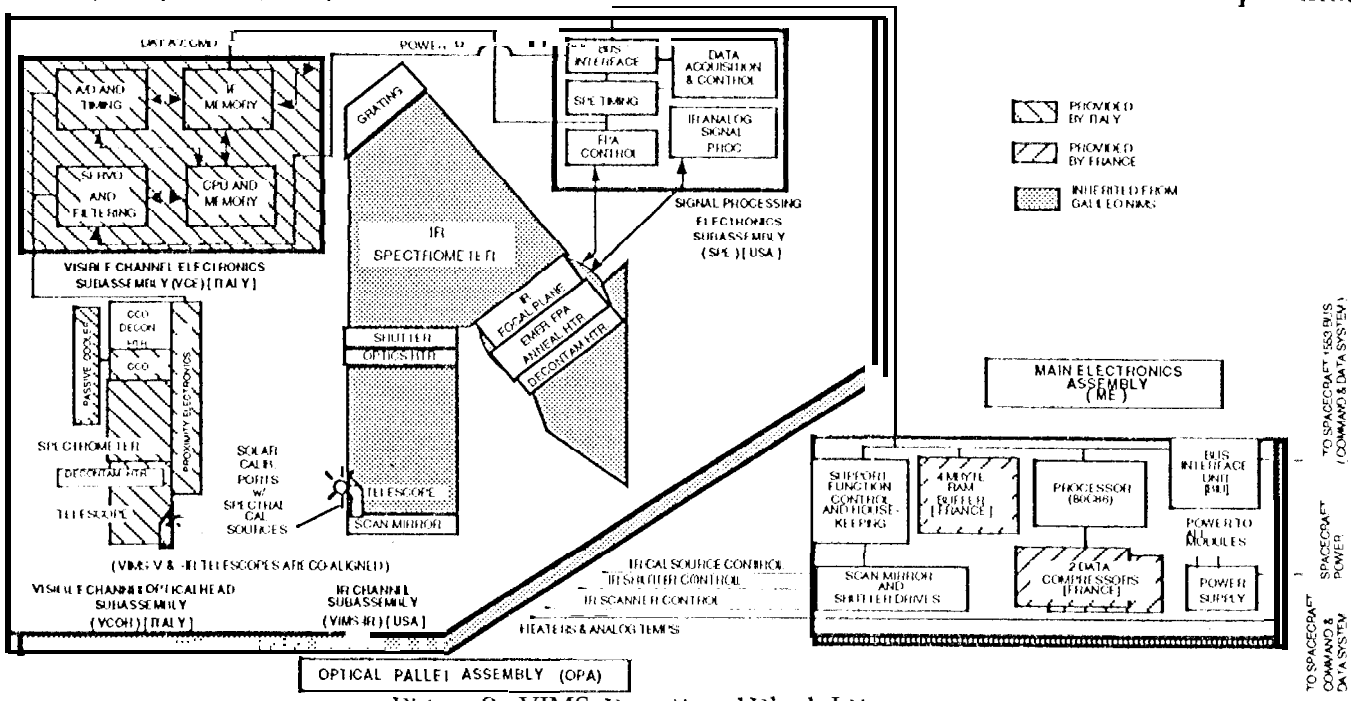

Figure 2. VIMS Functional Block Diagram.

	'VISIBLE CHANNEL	IR CHANNEL	TOTAL SYSTEM
PECTRAL:			
Spectral Coverage	0.35 to 1.05 µm	0.85 to 5.1 µm	0.35 to 5.1µm
	(VIMS-V can be shifted to 0.30 to 1.00 under special command)		**0.30** to 5.1µm
Spectral Sampling	7.3nm / spectel *	16.6 nm / spectel	
	(96 bands)	(256 bands)	
	● (five 1.46 spectels are summed to= one 7.3nm nominal spectel)		
PATIAL:			
Inst. Field of View	0.17 xO.17 mrad	**0.25** mrad	
(IFOV)		x 0.50 mrad	
Effective IFOV(= 1 PIXEL)	(3x 3 sum)	(1 x ? on-chip sum)	0.5 x 0.5 mrad
Field of View (FOV)	64 pix(1.83°) X-axis	64 pix(1.83°) X-axis	64pix(1.83°) X-axis
	64 pix(1.83°) Z-axis	64 pix(1.83°) 7-axis	64 pix(1.83°) 7-axis
wath Width			
(to make a line)	576 IFOVs (3x3x64)	**128** IFOVs	64 X-axis pixels
Image Size Variability	1, 12, 64 pixels^2	1, 1?, 64 pixels^2	1, 12, 64 pixels^2
Image Scan Motion	64 lines on Z-axis,	128 0.25 mrad	
	in 191 0.17 mrad steps	IF OVS in X-axis, 64 lines in 7-axis	
IEGISTRATION			
Co-alignment (between channel foresights)			≤ pixel
Spectral (spectel-to-spectel)			≤ pixel
)PTICAL SYSTEM			
Effective Focal Length	143 mm	**426** mm	
f/#	f/3.2	f/1.86	
A-Omega	**4.42 x** 10-7 cm2 ster	4.37 x 10-5 cm2-ster	
Geometric throughput	100 %	55 %	
SPECIROMETER	Holographic grating	Plane grating	
Entrance slit width	20 µm x 6 mm	O.? x 2.4 mm	
Grating blazes	two laminar depths	three ruled angles	
Grating groove density	349.8 grooves/mm	36.2 grooves/mm	
N-FLIGHTCALIBRATION:			
Spectral (internal)	**2** LEDs	1 Laser Diode	
Spectral (external)	Solar Calib.Port	Solar Calib.Port	
Radiometric	Stars	Stars	
Dark Signal	Space Background	Closed Shutter	
)ETECTORS:			
1 ype	Si 512x 256 (2-D)	InSb 256-pixel (1-D)	
Active area	24 x ?4 µm / pixel	103 x 200 µm/pixel	
Pixel separation	24 µm	123 µm pixel-to-pixel	
Quantum Efficiency	0.13 ≤ Q ≤ 0.41	≥ 70%	
Max. Charge Storage	3x105 e-V, 9 x 10^5 e- H	.. 2.5 x 10^6e-	
Read Noise	10 e- rms	55000-	
Dark Current	40pA/cm2 @ 22°C	**3** pA @ 64°K	
)RDER SORTING FILTERS:			
First Segment	**0.30-0.60** µm	0,8-1.63 µm	
Second Segment	0.60-1.05 µm	1.55-3.0 µm	
1 bird Segment		2.91-3.88 µm	
Fourth Segment	'0.30-0.49 µm	3.86-5.1? µm using a **3%** linear variable filter	
*(lumigen coating on CCD for conversion of short wave photons to detectable wavelengths)			
LECIRONICS:			
Digitization	12 bits	12 bits	12 hits
Pixel Integration Times	80 msec to 130 sec	13 msoc to 1? sec	
System Power (Peak Image)			Peak- ?3.9 W
Telemetry Out Data Rate			183 kbit/sec
Data Compression			> 2 to 1
)PERATING 1 EMPERATURES:			
Detector	-40°C to -20 "c	60K to 77K (-213°C to -196°C)	
Optics	-10 to +20 °C	-143 to -113 C	
Electronics	**-70** to +50 "c	**-20** to +50C	-20 to +50 C (ME)

TABLE 1. VIMS I DESIGN SPECIFICATIONS SUMMARY

4. VIMS OPERATION

VIMS-V and IR work in unison to provide data that appears as if they were made by a single device. Due to their different detector configurations, precise synchronization Of their mirror motion and data collection is critical. Because the Visible Channel uses an area array Charge-Coupled Device (CCD) detector it acquires its data in "push-broom" mode; i.e. it views one row of a square scene at a time. This row is imaged as one row of pixels 011 the CCD, and the spectrometer spectrally disperses the image of this 10W so that each row of the CCD views the image in a different waveband contiguous with its neighboring rows. "1'0 acquire a square image the CCD is read after each row is acquired and the mirror moves to the next row in the scene.

The IR Channel detector. or Focal Plane Assembly(FPA), uses a linear array detector so it acquires its data in "whiskbroom" mode, where it views only a single spatial pixel per exposure. The spectrometer disperses the image of this pixel on the FPA so that each detector views the pixel in a different contiguous waveband. To provide synchronous data with the VIMS-V, VIMS-IR must sweep its single pixel field of view along the identical row in the scene that the VIMS-V is observing within the same exposure time. To create a two-dimensional image, the two channels begin at the top of the desired scene and acquire data row by row. This requires]Ic]-feet synchronization and excellent geometric alignment.

The pixel summing anti image scanning process is illustrated in Figure 3. Because of their different detector sizes, each channel must synthesize a square nominal system pixel (0.5 x ().5 mrad) by summing more than one exposure of each detector. The IR FPA has rectangular detectors, so it builds a square IFOV by continuously integrating while the mirror moves over two rectangular IFOVs. VIMS-V pixels are 0.167 mrad square, so a 3 x 3 grid of VCOH pixels is summed to equal one system pixel. "1'0 sum 3 IFOVs in one dimension the VCOH steps its mirror twice while continuously integrating during a single exposure time. Then the VCE commands the CCD to sum every three pixels in the other dimension upon transfer to its horizontal register. This results in an equivalent 0.5 mrad square IFOV pixel. (Five pixels are finally summed in the spectral dimension to achieve the specified nominal visible spectral bandwidth of 7.3nm.)

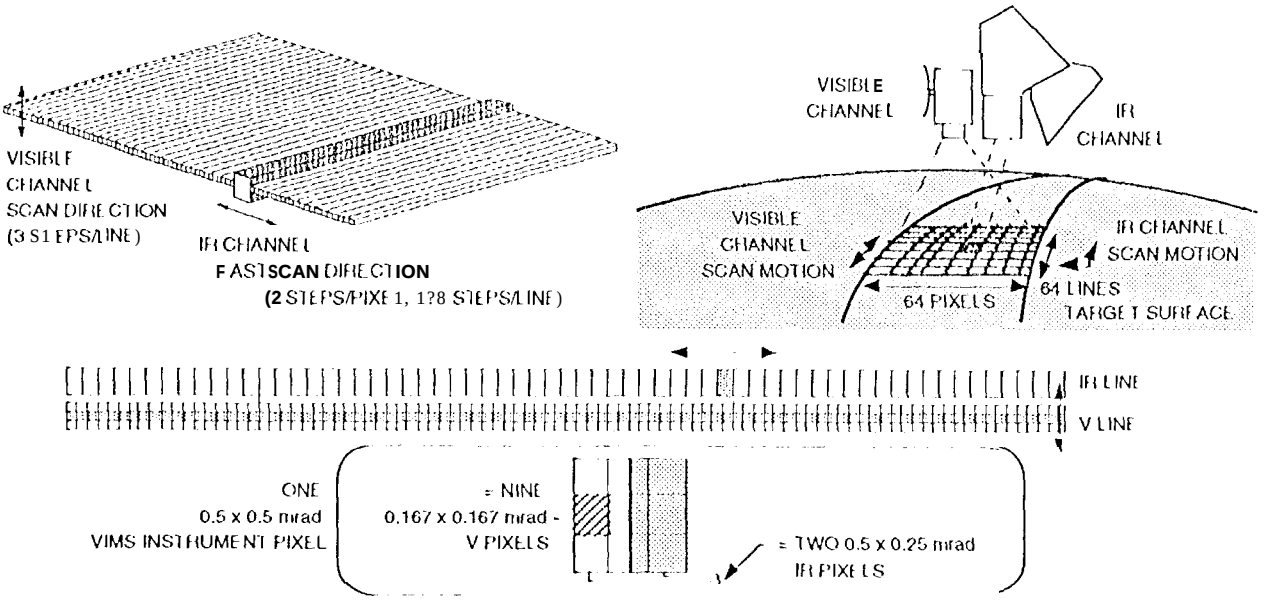

Figure 3. VIMS Pixel Synthesis and Image Scanning

5. VIMS OPERATING MODES

VIMS can be operated in a variety of modes determined by several parameters. The parameters of image size (1x1, 12x12, or 64x64 pixels), and integration time most directly determine the data rate. VIMS can also operate in "point" or "line" modes for specialized investigations. Point mode measures spectra at a single point in space; line mode measures a single line in space which is useful for fast object flybys. Point mode will be used for occultation studies[6] where a star spectra is tracked as it passes behind an atmosphere.

6. IN-FLIGHT CALIBRATION

To provide in-flight calibration of spectral performance a port for viewing the Sun was incorporated in each channel. The Sun is an ideal calibration source because its spectrum is well known over the VIMS spectral range and bandwidths, and because the sun is the external light source for VIMS imaging. Also, since the Cassini-UVIS instrument will point a special port at the sun as part of its experiment, regular opportunities for sun acquisition are available. Both IR and Visible Channel solar ports are co-aligned with the UVIS port at 20° off boresight. Also, each telescope has on board narrow bandpass sources (LEDs or laser diodes) which will be used to check for spectral registration shifts after launch.

7. THERMAL DESIGN

VIMS, particularly the IR Channel, is highly dependent on its ability to stay very cold. The two optical systems mounted on the Optical Pallet Assembly require operating temperatures maintained at a wide range of temperature extremes ranging from -21[5*C (60K) at the IR FPA to + 15° at the VCE. The IR FPA simply will not yield useful data at temperatures above 80 Kelvin. The thermal design was achieved with a variety of techniques which were analyzed and coordinated using computer thermal models and verified in test. In particular, the VIMS-IR design relies on low emittance coatings to minimize radiative heat transfer. Decontamination heaters are mounted to the most critical surfaces to prevent these coatings from contamination, which could dramatically alter their performance and therefore the performance of VIMS. Since the OPA is mounted directly to the Cassini Remote Sensing Pallet (RSP), the spacecraft maintains the temperature of the OPA pallet at the spacecraft operating temperature by conduction. This is close to the desired operating temperature of all the VIMS electronics and the VCOH, which makes it convenient to thermally couple these components to the pallet with a hard high conductance interface. Additionally, the multilayered insulation that covers the pallet also encloses these components. The IR Channel, IR FPA, and Visible CCD are thermally isolated from their respective pallet interfaces. The IR Channel is conductively isolated from the pallet with titanium kinematic mounts, and special low conductance cables minimize the heat added to the IR Channel through its electrical cabling. The outer surface of the IR Channel is exposed to space and thus serves as a thermal radiator to cool its optics and structure. Multilayer insulation between the IR Channel and the pallet minimizes the heat transferred to VIMS-IR there. An additional shield is provided between the IR Channel and the inboard adjacent warm spacecraft bus. The IR Channel outer surface does have a thermal view to the spacecraft's high gain antenna (HGA). However, the HGA temperature is expected to be near the temperature of the IR Channel at Saturn, so the heat absorbed from it will be small.

Inside the IR Channel, a passive radiative cooler is used to cool the IR FPA to its required operating temperature. The detector is mounted to a cold finger extending from the cold stage of the cooler that is conductively isolated from the optics structure with fiberglass support bands. A low conductance flexprint ribbon cable minimizes the heat leak transferred through the cables to the FPA. For the same reason, manganin wire is used for the larger wires necessary to power the radiator's decontamination heaters. Low emittance gold-coated surfaces inside the cooler minimize radiative heat transfer, and a gold-coated shield surrounds the cold stage to eliminate heat gained from adjacent instruments and spacecraft structure.
The VCOH uses a flat plate radiator to cool the CCD. The flat plate is conductively isolated from the optics housing on a titanium tripod, and a cold finger extends from the flat plate to the CCD located within the optics housing. The CCD is mounted to the interior structure with a low conductive titanium structure. The flat plate radiator is co-planar with the radiators of other adjacent instruments so it has a full view of space without the use of additional shielding.

8. VISIBLE CHANNEL

8.1 Overview

The VIMS Visible Channel[7,8] (VIMS-V) is an imaging spectrometer optimized for high spectral and spatial resolution operations in the ultraviolet to very near infrared spectral regime (0.30 to 1.05μm). It consists of an optical head (VCOH) coupled to an electronics box (VCE), both mounted to the VIMS optical pallet and interfaced to the ME via the SPE. The VCOH is illustrated in figures 4 & 5.

8.2 Visible Channel Optical Head

The VCOH telescope is an off-axis Shafer design consisting of two pairs of concentric spherical mirrors. It is coupled to a spectrometer that matches the telescope f/# and uses an uncorrected convex grating in an Offner relay configuration. At the focal plane of the spectrometer a CCD detector is supported within a titanium cylindrical Focal Plane Assembly (FPA) that is thermally isolated and coupled to the VCOH passive radiator. The telescope's optical components are mounted on an optical bench supported by internal kinematic mounts. The bench and all components are aluminum, which athermalizes the assembly. The scan unit, controlled from the VCE, supports and scans the primary mirror with flexural pivots. An on-board calibration unit incorporating two spectral sources (LEDs) and a solar aperture for solar calibration is included in the +Z side of the telescope near the base of the baffle for solar acquisition simultaneous with the IR Channel and UVIS.

The CCD is a 256 x 512 pixel frame transfer front side illuminated, three-phase NMOS device with buried channel design. The VCOH proximity electronics supports the CCD driver, a Fully Programmable Gate Array (FPGA) phase generator, preamplifier, amplifier buffer, line receivers, and a bi-level interface to switch the amplifier gain and LED control circuit.

The VCOH can be operated in various pixel summing modes. At launch VIMS-V will be set to operate in "nominal" mode, in which its spectral and spatial summing are configured to match VIMS-IR (3x3 spatial x 5 spectral pixels ("spectels") are summed to equal a "nominal" VIMS pixel). Via post-launch software patches to the VIMS ME, it may be possible to re-configure the ME to process the high spatial (0.167 mrad) or high spectral (1.46nm) resolution data which VIMS-V is able to produce in other modes. Use of such modes preclude the simultaneous use of the IR Channel.

8.3 Visible Channel Electronics

The VCE is the controller for the Visible Channel and the primary interface between VIMS-V and the rest of the instrument. The VCE is connected to the ME via the SPE for power, commands, and data transmission, and is is coupled to the VCOH via the VCOH proximity electronics. It houses four printed circuit boards (PCBs) which separately support the scan mirror electronics, power supply filter, acquisition and timing electronics, CPU and memory, and memory interface electronics. The acquisition and timing electronics PCB includes the signal processing chain and four FPGAs that generate the signals to control the CCD scan according to the parameters set by the CPU. The FPGAs enable VIMS-V to vary pixel summing, scan position, image frame size, and exposure times according to commands from the ME.

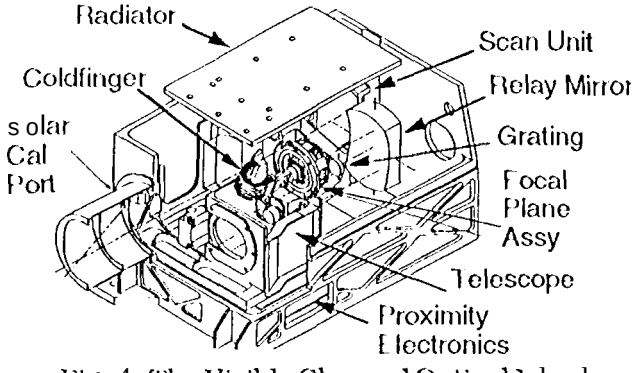

Fig. 4. The Visible Channel Optical Head

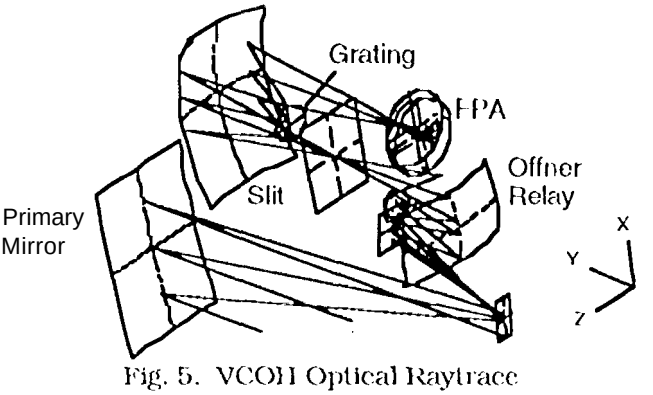

Fig. 5. VCOH Optical Raytrace

9. INFRARED CHANNEL

9.1 Overview

The Infrared Channel design is drawn from the Galileo NIMS instrument with some important exceptions that vastly improve VIMS performance over NIMS. In fact, most of the IR Channel structure, optics, and passive radiative cooler is actually a refurbished flight-quality prototype for the NIMS. The IR optics consist of a 23cm diameter f/3.5 Richey-Chretien telescope with a scanning secondary mirror coupled to a triple-blaze grating spectrometer with an f/3.5 Dahl-Kirkham collimator and an f/1.86 flat field camera. Since this instrument has been described in detail previously[9,10] this discussion will concentrate on the enhancements to the NIMS prototype which were made for VIMS, summarized in Figure 6.

A complete new IR FPA was CICVC10IM1.

A 2-axis scan mechanism for the telescope secondary mirror replaces the single-axis NIMS mirror scanner.

A statically mounted, 3-blaze grating was built to replace the scanned, 2-blaze NIMS grating and mechanism.

A shutter mechanism was developed to replace the NIMS chopper mechanism.

A new on-board solar and spectral calibration system was added.

A new radiator shield was designed.

New radiator and optics covers with a modified cover release system were developed.

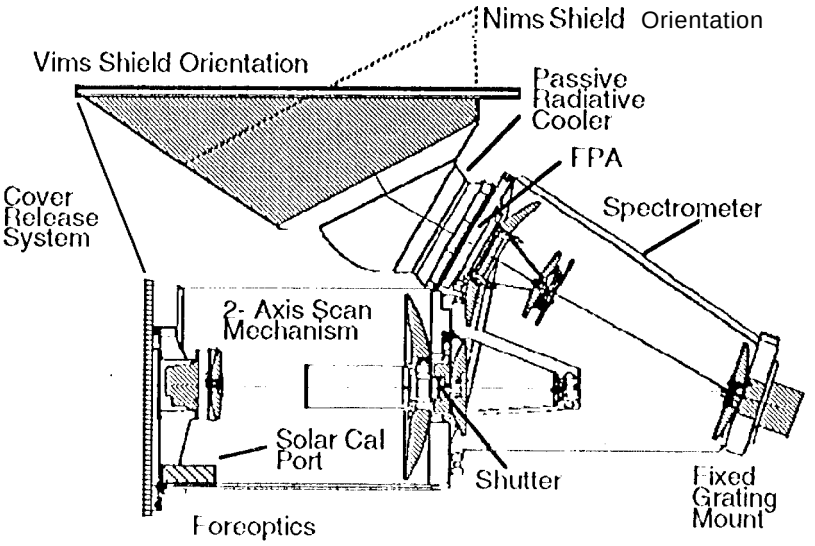

Figure 6. The IR Channel (NIMS modifications noted)

9.2 InSb Focal Plane

The VIMS IR Focal Plane Assembly (FPA), developed by Cincinnati Electronics with JPL, is a linear array of 256 Indium Antimonide (InSb) photodetectors which are read simultaneously by a pair of multiplexers (figure 7). The detector-multiplexer assembly is mounted in a Kovar package which is designed to exactly duplicate the external properties of the NIMS package. This allows the FPA to jl)tcl-face to the existing NIMS cooler, which keeps the FPA within its 60-771< operating temperature range. Inside the package and directly over the detector array, a set of four order sorting filters are precisely mounted to prevent higher order spectra and out-of-band radiation from contaminating the narrow band light to be measured by each detector. Each detector is 200 x 103μm in size, with 123μm between detector centers. The multiplexers are arranged on either side of the

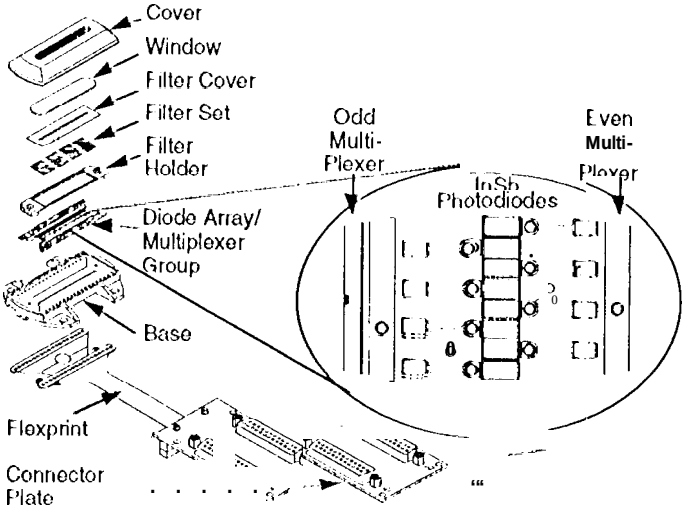

Figure 7. VIMS IR Focal Plane Assembly

array and each one is configured to read the odd or even numbered detectors respectively; i.e. the multiplexer on one side reads the odd detectors and the even ones are lead by the other multiplexer. The signal from each multiplexer is read out by the Signal Processing Electronics, where they are digitized and intermixed for further processing. This provides a degree of redundancy; if one multiplexer or its downstream signal processing fails the data from the other multiplexer still could provide limited coverage over the full spectral range.

Carefully designed in consultation With the VIMS science team, the filters were configured in four segments whose spectral range were determined primarily to achieve order sorting ant] to ensure that gaps between segments would not occur in wavebands of importance to the science investigation. Thermal background rejection was a significant factor in wavelengths above 3 microns, which led to the use of a 3% linear variable filter as the fourth segment. Substrate compositions were based on transmittance in the segment region and on out-of-band rejection properties- Table 1 lists the transmission properties of the filter set.

9.3 Two-Axis Scan Mechanism

The IR Channel telescope secondary mirror (figure 8) is mounted on a two-axis scan mechanism designed to step the instrument's instantaneous Field of View(IFOV) across the overall scene to "raster scan" a full field image. This is done using four voice coil motors to achieve full 2-D motion, and two Linear Variable 1 Displacement Transformers (LVDT) to sense mirror position. The mirror is supported at its center on a weight-balanced aluminum dish to which the voice coils, a monolithic gimbal ring, and the LV11'1's are attached. Flexures in the ring support the dish on a three-legged aluminum spider within the telescope tube.

The monolithic gimbal ring allows mirror motion about two axes of rotation by means of four flexures. The one-piece gimbal ring and its integral flexures were designed and fabricated of tool steel. Flexures are cut into the ring using electric discharge machining (EDM). To improve flexure fatigue life (to 20 million cycles), the EDM-induced recast layer was removed by an acid etch & electropolish technique. Thermal expansion between the dish, the steel gimbal and the spider is accommodated using a second stiffer system of four flexures cut into the top of the gimbal ring itself, perpendicular to the primary flexures. Mirror range is 64 pixels in both axes, just less than 2 degrees of angle.

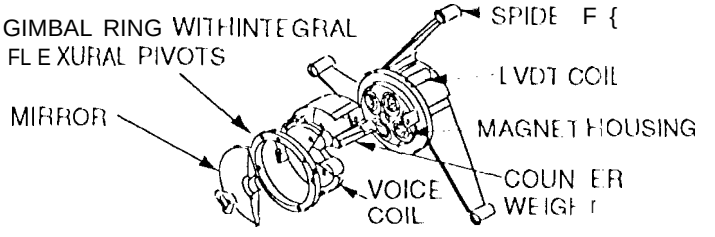

Figure 8. IR Channel Mirror Scanner

For each axis the mirror is driven ill uniform steps. Image data is collected only during the X axis scan motion of the mirror, which then flies back to the next Y axis starting position in preparation for the next line. Each axis is driven separately by identical driver circuits in the ME. For each axis a sepal-ate LVDT produces a signal representing the position of the mirror in its axis. Each LVDT's signal is sent to its corresponding driver circuit in the ME, where the signals are demodulated and applied to a summing node in a servo loop. The summing node compares the LVDT signal to the commanded mirror position. The servo loop amplifier circuits are compensated to optimize stability and bandwidth to achieve the required 5 ms mirror step transition time.

9.4 Triple-IHazc Grating

Because the improved FPA allows simultaneous collection of all wavelengths of interest, the VIMS-IR needs only a statically mounted grating as opposed to the scanned grating and mechanism required by Galileo NIMS. The VIMS grating is blazed in three distinct zones. The selected blaze wavelengths and area fractions were designed to optimize the signal over the waveband of the IR channel. The groove spacing (27.6(; 1 μm) was selected to disperse the first order wavelengths 0.85-5. 1 μm across the focal plane detector. The first zone covers 20% of the active area, and the second and third blazes cover 40% of the active area each. The blaze wavelengths are 1.3μm, 3.25μm, and 4.25μm, respectively.

9,5 Shutter Mechanism

The IR Channel uses a blade-type shutter located just before the entrance slit to the spectrometer. On command, the shutter is activated to block light from entering the spectrometer in order to record the combined dark current and thermal background associated with a given measurement. Normally this is done at tile end of every line scan and the background data is subtracted from the subsequent science data in the compressor. The shutter driver, located in the ME and activated from the processor, is composed of an amplifier and an output driver circuit configured 10 provide the appropriate drive to the voice, coil type actuator in the shutter. A second coil in the shutter provides a velocity feedback signal to the driver amplifier that inhibits ringing of the shutter blade. An LED-Photo sensor system is located within the assembly in a manner that allows blade position to be detected. Light from the LED is blocked against entering the optical path of the instrument. The shutter was tested to over 7 million cycles at 125 K temperature. Shutter position is provided in the housekeeping data set.

9.6 Solar Calibration Port

For the IR Channel, the problems posed by a solar port are how to adequately attenuate the light to within the dynamic range of the FPA in a spectrally repeatable manner, and to utilize the full optical path of the instrument. The scalar calibration port takes light incident at an angle of 20" from the main aperture boresight in the direction of the Cassini high gain antenna (coincident with the UVIS solar port angle), attenuates it uniformly by four orders of magnitude over the IR operating waveband, and transmits a 2000:1 linearly polarized image of tile solar disk to the main aperture of the instrument. The area fraction of the instrument entrance pupil covered by the attenuated beam is approximately 1 / 1000, giving a total relative attenuation of seven orders of magnitude. While the look angle of the calibration port is fixed with respect to the spacecraft, its fie.lcl-of-view is the same as the instrument to allow compensation of possible spacecraft pointing errors. Included in the calibration port is a laser diode that may be used to check for shifts in spectral registration at times when tile solar disk is not in the field-c]f-legard.

The impact on instrument optical performance of the solar cal port's location within the main aperture of the instrument was minimized by maintaining a small cross- sectional area (less than 10% of the main aperture collecting area). This cross-section includes a set of baffles to control glancing incidence reflections off its sul-face into the field-of-view of the instrument.

Due to its geometry, the calibration port output beam underfills the entrance pupil of the instrument both in spatial extent and f/#. Since the entrance pupil is conjugate to the triple-blazed diffraction grating, the signal generated via the calibration port illuminates the gl-sting differently, and thus has a different spectral responsivity, than that of the main aperture. This difference must be characterized carefully during ground calibration in order to successfully utilize the calibration port in flight.

9.7 Passive Thermal Radiator Shield

V] MS-II< uses the spare NIMS passive radiative cooler to cool the focal plane to its operating temperature of approximately 60 Kelvin. The cooler was unmodified except for" the design of the sun shade which attaches to it. The shade was changed from a conical design to a design which emerges from the cooler in a round cross-section and blends to a square cross section at its exit plane. This maximizes the cooler's view to dark space and renders it co-planar to the defined Cassini Remote Sensing Platform (RSP) radiator plane.

10. SIGNAL PROCESSING ELECTRONICS

The SPE controls the operation, with logic pulses and bias voltages, of the Focal Plane Array FPA. During each spatial pixel period, the FPA clock transfers a spectrum (a readout of the two sets of odd and even detectors) from the FPA to the differential input of the SPE. After OffSet and gain corrections, the spectral signals are quantized to 12 bits and transferred to the pixel buffer where they are picked up by the processor (in the ME) over the 12-bit global data bus. Subsequently, the previous spectrum of Visible Channel data (one line behind) is also picked up by the processor through the SPE. This process is governed by a line sync pulse which the SPE delivers to the Visible, Channel to provide synchronization with IR data collection. Commands to the Visible Channel arc relayed by the SPE on the global data bus. Dedicated lines from the ME to the SPE are used to change detector bias and gain levels upon command.

11. MAIN ELECTRONICS

11.1 Overview

The ME governs the operation of VI MS, and so is the central link between the spacecraft and the Optical Pallet Assembly. It is controlled by a single Central Processing Unit ((3'11) coupled to the 4Mb data buffer memory, the two Data Compressors, and the SFC. The ME issues hardware and software controlled synchronizing signals for the SPE, the Visible Channel, and the IR Channel mechanism drivers based on commands received and interpreted by the Flight Software (II'S). The ME also contains the VIMS power supply and a Cassini Bus Interface Unit (BIU), the M 1553 bus interface design that is common to all Cassini instruments. All heater power lines and temperature sensors are routed through the ME, although most of them are controlled and monitored by the Cassini Data System (CDS) independent of the VIMS power state.

11.2 CPU/PROM

An 80C86 processor serves as the VIMS CPU, ant] controls the major functions of the instrument, including Visible Channel commands and data collection via 3 data buses. A local data bus provides processor across to the 64KByte RAM ant] tile 96KByte PROM for Flight Software storage, a private bus provides CPU access to the Data Compressors, and a global bus (up to 16 bit) provides access to the SPE, Data Buffer, SFC, and the BIU.

11.3 Software

The management of commands, data and instrument control is under software control. Written in C and in assembly code where necessary, the Flight Software (FS) re.sides in PROM. It is activated as soon as the instrument is powered on. The FS was implemented so that the program can be modified via patch points located throughout the code. This was done to enable possible enhanced investigations that would require software modifications, and to accommodate any other code changes that might be required.

Data management involves collecting science data from the SPE in spectral order, and reformatting it (rotate it) to spatial order fen" compression. After each line of spectrum data is rotated, it is transferred to the compressor. After compression, the data is packetized in standard Cassini packets, stored in the 4Mb data buffer, and then transferred over the global data bus to the BIU for relay to the spacecraft and the Earth.

11.4 Data Compression

The VIMS Data Compressor (IX) processes the on-board VIMS data with a compression factor of 2.5 to 3 using a fully reversible error -free algorithm. The procedure is initiated at the end of each line scan. The compressed units are subsets of data ("sul~-slices") of 64 pixels x 32 spectels, which make up a self-consistent data set. In the preprocessing phase, the large brightness variations which are the dominant contribution to entropy in the compression are first evaluated, subtracted and separately encoded. The preprocessing algorithm includes dark current subtraction as commanded by the CPU. An automatic gain adjustment is also available to reduce the impact of photon noise on the compression ratio, The arrays which result from the preprocessing are bit encoded using the Rice algorithm. [11] The DC takes 5 microseconds to compress a 12-bit element and 1.76 msec per complete spectrum which is less than 15% of the duty cycle corresponding to the shortest IR integration time, 13 msec.

The Data Compressor (DC) operates as a co-processor for the VIMS CPU. It is built around a RISC, ADSP 21 00 digital signal processor running at 6 MHz using a Harvard architecture with separate data and program buses. The DSP board also includes a 8 kword Data Memory, a 8 kword Program Memory, PROMs and a 24 MHz oscillator coupled to a 4 times divider. The CPU interface integrates a Data Memory acknowledge generator, an I/O address decoder, a FIFO, a read/write generator, a CPU interrupt generator, a reset circuit, a reset logic, I/O buffers anti a power switch. Access to the CPU is made through a private bus by means of two 16 bit FIFOs located in the CPU. At reset time, the program stewed in PROMs is down loaded into the faster RAM in less than 2 msec. Two complete DCs are provided; either DC can be used independently by the VIMS CPU. The I/O buffers are powered on permanently but are put in high impedance mode when the corresponding compressor is off. The design of the power switch protects the DC against possible latch-ups.

11.5 Buffer Memory

A 4 Mbyte data buffer (DB) temporarily stores compressed VIMS data prior to transfer to the spacecraft. The DB is composed of two redundant pages of 2 Mbytes each, which can be isolated or enabled by direct command. Each page is composed of 32 "sectors" organized as 4 lines by 8 columns. A sector contains two 32K x 8 memory chips connected in parallel to achieve a 16 bit structure. A Direct Memory Transfer mode is used with typical times for write and read processes of 240 and 140 nsec respectively. Latch-up protection integrated in one ASIC is included on each column which can be switched off and on individually; an automatic switch-off occurs within 1 1 msec of reaching a 100 mA current threshold. Developed by the Dassault Electronique French company, the DB is made of one board only, an alumine plate with elements for one page! on each side. It uses thick film integration technology, fully space qualified by CNES. A tight laser sealed housing protects the components and makes a box which is electrically interfaced through a 65 pin KNB connector. A special conical mounting system simplifies installation or removal of the DB circuit anti optimizes thermal contact of the DB to the main support.

11.6 Support Function Controller

The Support Function Controller (SFC) provides the basic clocks and timing signals to coordinate instrument operations, primarily mirror scan timing ant] data collection. After processing a mode command, the CPU addresses and programs the SFC timers with appropriate timing variables for synchronizing IR integration time with mirror dwell time, interline delay, interframe delay, VIMS-V line sync pulse, and various clock signals. During each operational mode, the SFC controls these operations autonomously.

12, GROUND SUPPORT EQUIPMENT (GSE)

In order to simulate the Cassini spacecraft environment anti to provide a direct user interface during VIMS testing, its Ground Support Equipment (GSE) supplies and controls simulated Cassini Spacecraft power, heaters, and spacecraft-level command and data interfaces. The GSE is installed in a mobile 6' rack of support electronics driven by a Sun SparcStation 11 running Sun OS 4. 1.1 and Open Look 2.0. The Sun is configured with 32 MB RAM, a 600 MB science data disk, 1.2 GB elcc~ro-optics] data archiving disk, and 4 GB DAT backup drive, and the computer chassis is augmented with an S-Bus expansion chassis housing 3 S-16d DMA controllers. The rack houses the computer chassis. a programmable simulated Cassini Spacecraft power supply, electronics controlling simulated spacecraft heaters and temperature sensors, and a pc-based RTIU (Remote Terminal Interface Unit) to simulate spacecraft bus instrument command and data acquisition sequences. The GSE software. provides a graphical user interface for instrument commanding and for image cube acquisition, display, processing, and archiving. This includes real-time data decompression and formatting, image processing, and spectral plotting functions. The GSE software supports VIMS testing from the electronics subsystem level through full instrument Calibration and spacecraft integration. After launch, the GSE software will be used to prepare and test commands prior to transmission to the spacecraft, and to decompress and preprocess clown linked data.

13. GROUND CALIBRATION SYSTEM

Due to the cryogenic nature of the IR FPA, calibration and functional testing of VIMS on the ground required a 3 meter diameter cryogenic vacuum chamber. Because of its high daily operating cost, a custom system of calibration equipment which automated the lengthy measurements and data logging was developed. A high quality collimator system integrated with a 3-axis computer controlled stage at the focal plane allowed for the input and precise movement of calibrated targets across the instrument fielcl-c~f-view. Several current-controlled calibrated light sources were used in conjunction with a computer-controlled single pass monochromator for spectral and radiometric calibration. The entire calibration system was linked by a Macintosh computer to the GSE and the instrument. The Macintosh was programmed to prepare the sources and target position, command the instrument to its appropriate mode via the GSE, and to record data retrieved from the GSE in a data log along with relevant calibration setup data. Automated sequences and data logging formats for spectral, radiometric, and geometric calibrations were programmed, as well as a free form manual control enabling experimentation with the setup. Optical setups ant] calibration sequences were devised to meet the science team calibration plan which included radiometric, spectral, geometric, polarization, flat-field, and solar cal port calibrations.

14. PRELIMINARY RESULTS

This paper is being presented as the VIMS instrument is being prepared for delivery to the Cassini spacecraft for its final integration in preparation for spacecraft testing and launch. All VIMS functional testing and calibrations have been successfully completed, and preliminary analyses indicate its requirements have been met or exceeded. These performance and calibration analyses are to be the subject of future publication, however we preview some of tile results herein to demonstrate the operation of the instrument.

14.1 Sensitivity

Current-controlled tungsten and "IR glowbar" sources coupled to PTFE and gold coated integrating spheres were radiometrically calibrated to NIST traceable standards and placed at the focal plane of the target projector/collimator system. The sources were allowed to thermally stabilize and the instrument was commanded into point mode, viewing its boresight pixel. The integrating sphere aperture was centered on the boresight. Multiple spectra were recorded at various integration times, focal plane temperatures, gain settings, and controlled light levels. Source spectra were recorded interspersed with instrument Dark spectra (recorded with the VIMS shutter closed) and system thermal background spectra, taken with a room-temperature aluminum plate blocking the aperture of the integrating sphere. Using the measured transmittance of the target projector/collimator system and the calibrated spectral radiance of the source, an assessment of instrument sensitivity is made by correlating the spectral radiance at the entrance to the instrument to the Digital Numbers (I IN) output by the instrument for each detector. The result is expressed in photons/DN, which when applied to generalized instrument output, can be used to assess the radiance of targets in a VIMS image. The preliminary analyses depicted in figures 9 and] 0 show the senitivity derived from these measurements and projects the response of VIMS to radiances of the type expected at Saturn.

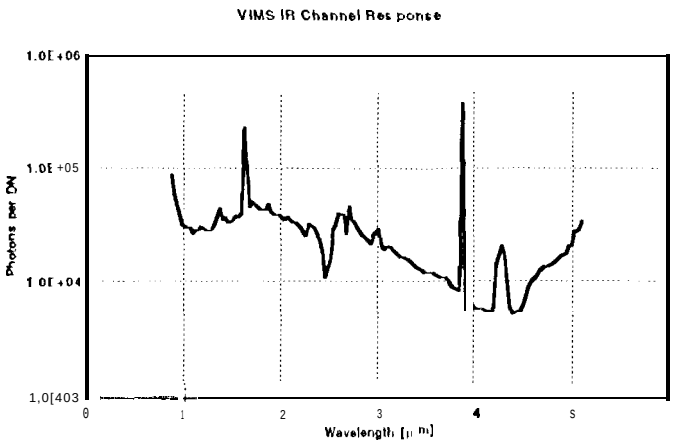

Figure 9. VIMS-IR Sensitivity

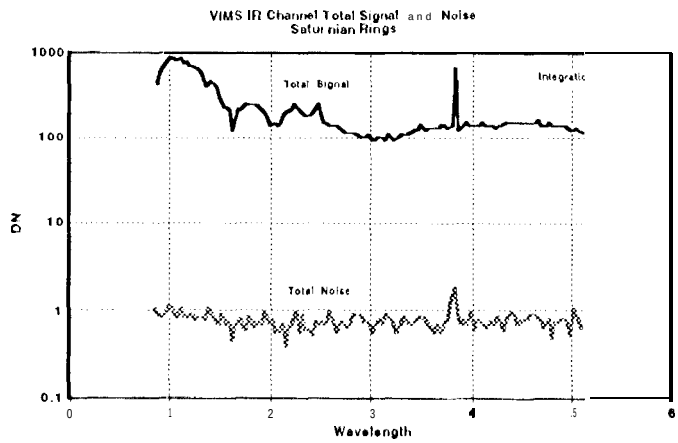

Figure 10. Projected IR Signal at Saturn's Rings

The derived IR Channel sensitivity shown in figure 9 is approximately twenty thousand photons input at the instrument aperture per each digital number (DN) output of the instrument. This is consistent with component level measurements on the FPA and 011 projections of signal chain electronics noise contributions which were done during the instrument design and fabrication phase. The sharp features are due to the FPA order sorting filter gaps and to atmospheric absorption bands which will be factored in to the find calibration.

The projected Signal at Saturn's Rings shown in Figure 10 is calculated using the measured instrument sensitivity and applying it to environmental conditions at Saturn and a sample Saturn Ring reflectance spectrum provided by the science team. The general SNR specification for VIMS is for greater than 100 SNR from 0.3 to 3.5 microns and as close to 100 as possible from 3.5 to 5.1 microns, at 10 AU from the sun while viewing a lo% albedo surface for 12.88 seconds per line. Figure 10 shows VIMS is projected to meet this requirement.

14.2 Spectral Response

Spectral accuracy is a critical aspect of VIMS performance. In addition to calibrations using the monochromator, filters of known spectral transmission were placed between a calibrated (NIST-traceable) radiometric tungsten Soul-cc and the instrument. These fillers were calibrated to O. 1 nm by an independent laboratory.

Figure 11 shows the spectral transmission of a Corning Glass 5121 sample as measured by VIMS (top) and the laboratory spectrometer (bottom). The filter transmits no light beyond approximately 3 microns. All the main absorption bands match well, with small differences attributed to the difference in spectral resolution between the two instruments.

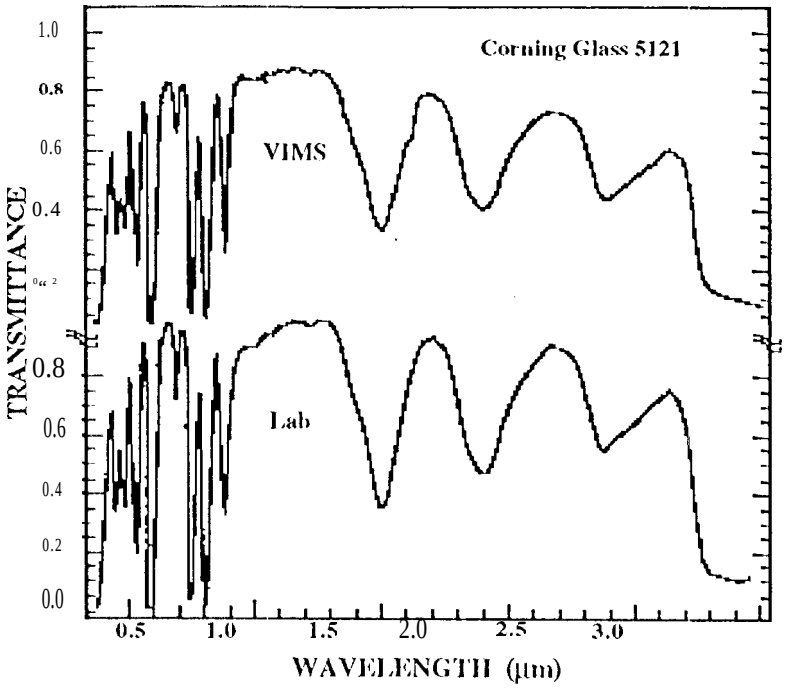

Figure 11. VIMS Spectral Response

14.3 Image Quality

Detailed image quality assessments are still in progress at this time, but preliminary results indicate spatial resolution and image scan stabilities well within one pixel as specified,

The image cube shown in Figure 12 was recorded during the intensive six week, twenty four hour-a-day calibration period which was led by the science team. The image is one frame (a single waveband) from a full spectrum 64 x 64 scanned image cube. The spatial target is a prominent member of the science team. Preliminary spectral analyses indicate the probable presence of water and trace minerals in the target.

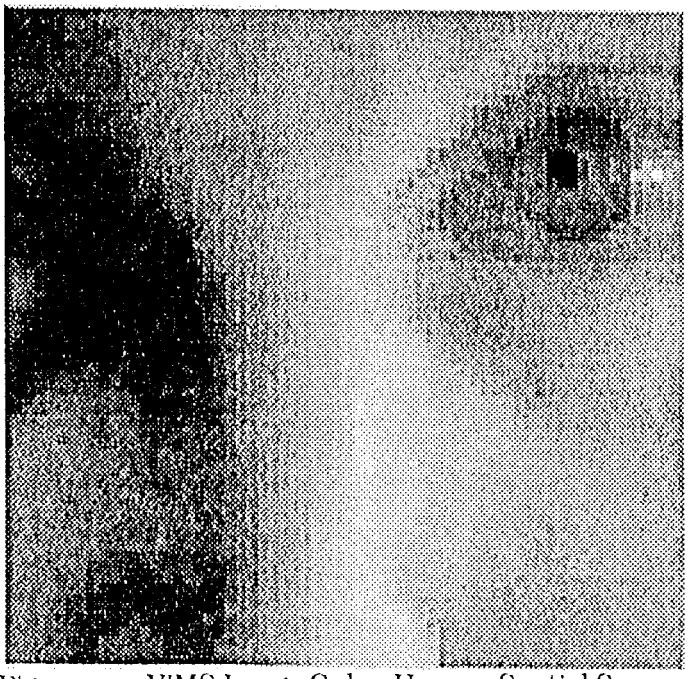

Figure 12. VIMS Image Cube- Human Spatial Source

15, ACKNOWLEDGMENTS

The authors wish to thank the many highly skilled and dedicated engineers and scientists across the world whose efforts were essential to the success of this instrument. Their creativity, expertise and teamwork is evident in VIMS' successful performance. They are:

for the Jet Propulsion Laboratory:
Steve Anthony, Bob Bamford, Dan Bergens, Michael Brenner, Bill Cole, Gun-Shing Chen, BJ Cheney, Chris Chovit, James Duval, Rick Escobido, Jessica Faust, Randy Foehner, Eric Fuller, Randy Hein, Ken Herkenhoff, Denise Hollert, Mark Herring, Cheng-Hsien Hsieh, Lucas Kamp, Taras Kiceniuk, Gary Kinsella, Bill Kloezeman, Gerhard Klose, Marc Lane, Randy Lindemann, Robert Lockhart, Steve Macenka, Mark McKelvey, Paul MacNeal, Luis Ramirez, David Risher, Lori Shiraishi, Kendra Short, Harold Sobel, Craig Staller, David Thomas, Rudy Vargas, Marc Walch, Jim Wang, Mark Webster, and the entire Galileo NIMS team.

for Officine Galileo:
Pierluigi Amerini, Carlo Beneforti, Marco Benetello, Cesare Caprini, Fabio Fabrizzi, Gianna Gironi, Vladimiro Guagni, Luca Maresi, Alessandro Mazzoni, Serena Mazzoni, Riccardo Paolinetti, Claudio Pasqui, Andrea Pelosini, Silvano Pieri, Maurizio Sabatini, Luca Sarti, Moreno Stagi, Nazzareno Tonetti

for Agenzia Spatiale Italiana:
C. D'Angelo, E. Marchetti

Centre Nationale de la Researche Scientifique / Institut d'Astrophysique Spatiale:
Christophe Ellec, Michel Le Cam, Brigette Gondet, Valerie Demuyt

for DESPA / Observatoire de Meudon:
Pascal Puget, Rene Knoll, Jean-Pierre Mengue

The VIMS Science Team and Associates:

Robert H. Brown, Jean-Pierre Bibring, Angioletta Coradini, Kevin Baines, Giancarlo Bellucci, Ezio Bussoletti, Bonnie Buratti, Fabrizzio Capaccioni, Andrea Carusi, Pricilla Cerroni, Roger Clark, Michel Combes, Dale Cruikshank, Pierre Drossart, Vittorio Formisano, Ken Herkenhoff, Ralf Jaumann, Yves Langevin, Dennis Matson, Tom McCord, Robert Nelson, Philip Nicholson, Bruno Sicardy, Christopher Sotin, and Gregg Swayze.

16. REFERENCES

1 J. Wellman, J. Duval, D. Juergens, and J. Voss, "The Visible and Infrared Mapping Spectrometer: A Facility Instrument for Planetary missions" SPIE Imaging Spectroscopy II, Proceedings Vol. 8341987, pp. 213-22.1

2 J.P. Bibring, y. Langevin, A. Souflott, M. Combes & C. Cara, "Results from the ISM Experiment," Nature 341, 591-593 (1989)

3 D. Juergens J. Duval, R. Lockhart, V. Formissano, and G. Belluci, "Visible and Infrared Mapping Spectrometer for Exploration of Comets, Asteroids, and Saturnian System Rings and Moons",

4 NASA, Announcement of Opportunity, OSSA-1-89, Proposal Information Package, "Cassini Mission: Saturn Orbiter Visual and Infrared Mapping Spectrometer Subsystem Inscription," Vol. VII, March 1990.

5 B. Buratti, "Scientific Objectives of VIMS at Saturn" Presentation 1 December 1993 (unpublished)

6 M. Walch, D. Juergens, S. Anthony, P. Nicholson, "Stellar Occultation Experiment with the Cassini VIMS Instrument", SPIE Infrared Technology XVIII Proceedings, Vol 1762, p. 483-494

7 G. Reininger, et al. "Visible Infrared Mapping Spectrometer Visible Channel" SPIE vol 2198/239, March, 1994

8 G. Flamini, et al. "Remote Mineralogy Through Multispectral Imaging: the VIMS-V Instrument" SPIE vol 2480/1951, 6/1 995

9 I. Aptaker, "A Near-Infrared Mappping spectrometer for Investigation of Jupiter and its Satellites" SPIE Instrumentation in Astromomy IV Proceedings, pp. 182-196, March, 1982,.

10 S. Macenka, "Near-Infrared Mapping Spectrometer Optical Subsystem Development & Testing," SPIE vol 430/46

11 R. Rice, P. Ych, and W. Miller, "Algorithms for a Very-High Speed Noiseless Coding Module" JPL Publication No. 91-1 (JPL, Pasadena Ca. 1991)