CO-CHANNEL FM VOICE SEPARA'1'1ON VIA CROSS COUPLED PHASE LOCKED LOOPS

Edgar Satorius

Jet Propulsion Laboratory/California Institute of Technology
Mail Stop 23 S-420
Pasadena, CA 9 I 109-8099
c-mail: satorius@jpl.nasa.gov

ABSTRACT

This paper presents the results of simulation experiments that successfully demonstrate FM co-channel voice separation via cross coupled phase locked loops (CCPLL). Unlike previous CCPLL studies which arc typically restricted to the situation where the FM modulation waveforms are steady state sinusoidal, triangular, etc., we have empirically determined CCPLL loop parameters that provide for stable separation of c(,-channel FM signals with comparable bandwidth (100% spectral overlap) and comparable mod indices. 'I'he resulting CCPLL parameters differ so mewhat from existing CCPLL design inks; however, the differences can yield a significant improvement in CCPLL performance.

1. INTRODUCTION

Unlike previous work on cross coupled phase locked loops (CCPLL) [1][2][3], Ibis paper focuses exclusively on the co-channel FM voice separation problem. The CCPLL incorporates two phase locked loops. One locks on to the stronger signal and the other to the weaker. Cross coupling at the inputs and outputs of the loops, allow subtraction of the stronger from the composite input signal to provide an estimate of the weaker signal. A similar subtraction of the loop weak signal output provides a strong signal estimate. The net effect of this cross feedback action is to enable joint demodulation of the strong and weak input signals.

The key to successful CCPLL operation is the estimation of the strong and weak signal amplitudes. Original CCPLL architectures [2] incorporated amplitude feedback control loops leading to a structure defined dynamically by six coupled, nonlinear differential equations. As such the behavior of these architectures could only be assessed via simulation experiments. Later work presented in [4] showed how to simplify the dynamics thereby improving CCPLL tracking performance. In particular, the digital feedforward difference amplitude tracking topology developed in [4] and illustrated in Figure 1 provides for effective signal separation even under highly overlapped signal conditions. The outputs from the two phase locked loops (PLL1 and PLL2) arc used to re-modulate the difference signals and thus the resulting amplitude estimates (outputs from the lowpass filters) are usually cleaner than those generated by the more standard CCPLL architectures [1][2]. Furthermore as shown in [4], the difference amplitude structure reduces the effects of strong signal "leak-through" which can severely degrade the weak signal amplitude estimate.

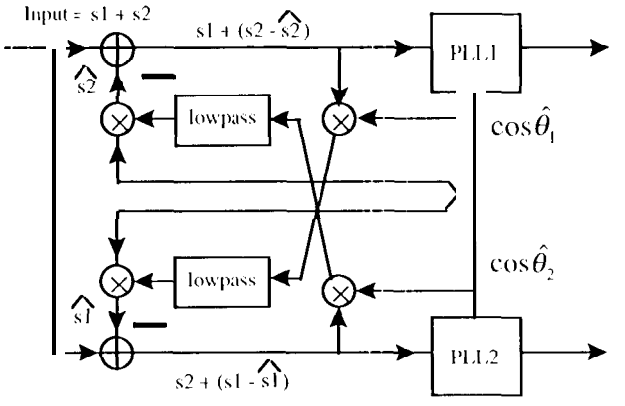

Figure 1. Difference amplitude CCPLL topology.

In Ibis paper, we present the results of computer simulation experiments that clearly demonstrate the FM voice separation capabilities of the difference amplitude architecture. The signal model is first described in Section 2 and the pert'ormaucc results are then summarized in Section 3.

2. SIGNAL MODEL

For clarity, we assume that there are exactly two co-channel signals. Extension to additional signals is straightforward [4]. The complex baseband representation of the sampled received signal is

$$x(n) = A_1(n)e^{j\theta_1(n)} + A_2(n)e^{j\theta_2(n)} + \aleph(n),$$

where $A_i(n)$ and $\theta_i(n)$ are the amplitude and phase of the i-th signal at time nT_s, respectively, where T_s is the sampling period, and where $N(n)$ is a complex noise process. The amplitude is assumed to vary much slower than the phase, which is further decomposed as

$$\theta_i(n) = \omega_i nT_s + \phi_i + k_i \int_0^{nT_s} m_i(t)dt,$$

where for the i-th signal, θ_i represents an offset carrier frequency in radians/second, ϕ_i is an initial phase offset in

The research described in this paper was carried out by the Jet Propulsion Laboratory, California Institute of Technology, under a contract with the National Aeronautics and Space Administration

radians, k_i is the frequency deviation in radians/second, and $m_i(t)$ is the message waveform. Here we assume that the message waveforms are normalized such that $1 \le m_{1,2}(t) \le 1$ for all $t > 0$. Note that utilization of the complex baseband representation necessitates the extension of the difference amplitude structure (Figure 1) to complex form, which is straightforward [4].

3. SIMULATED PERFORMANCE

The CCPLL performance depends on both the phase locked loop parameters (PLL1 and PLL2) as well as the lowpass filter bandwidths used to generate the amplitude estimates (Figure 1). In our studies, PLL1 and PLL2 are second-order and are parameterized by the loop and integral gains (in Hz). Initially, we chose these parameters based on the design rules proposed in [2]

- Strong-signal tracking loop (s):

$$Loop\ gain\ \alpha_s = \sqrt{8(k_s / 2\pi)W_s}$$

$$Integral\ gain\ K_s \approx \alpha_s$$

- Weak-signal tracking loop (w):

$$Loop\ gain\ \alpha_w = \frac{A_s}{A_w}\sqrt{8(k_w / 2\pi)W_w}$$

$$Integral\ gain\ K_w \approx \alpha_w / 2$$

where W_s, W_w denote the modulation bandwidths of the strong and weak signals.

Although the above design rules provide reasonable initial estimates for the CCPLL loop parameters, we have discovered that they do not necessarily result in successful signal separation. We have also found that since the signal amplitudes are varying much more slowly than the phases (signal amplitudes are actually held constant in our simulation experiments), then the bandwidths of the amplitude estimation lowpass filters can be narrowed to the extent that CCPLL acquisition performance is not compromised. In the following, the lowpass filters designs are second-order digital Butterworth, each with 300 Hz bandwidth. Also, the sampling rate, $(T_s)^{-1} = 132.3$ kHz, was much greater than Nyquist for the input signals (12 times oversampled). This accommodates bandwidth expansion due to the various non-linearities in the system. Sampling significantly slower than this can produce unstable behavior.

The performance results are stated in terms of the mean squared error (MSE) between the true sampled message signal $m_i(nT_s)$ and its estimate $\hat{m}_i(nT_s)$, normalized by the true message signal power

$$Normalized\ MSE = \frac{\sum_n \left(\hat{m}_i(nT_s) - m_i(nT_s)\right)^2}{\sum_n m_i(nT_s)^2}.$$

In arriving at a suitable set of CCPLL parameters, we select an arbitrary segment of input data (typically 3 seconds in duration) which is repeatedly processed with different CCPLL loop parameters. The best set of parameters are chosen based on the above normalized MSE metrics for both the strong and weak signal modulation waveforms (m_s and m_w). As an example of the selection process, we consider here the following signal parameters

$$k_s = k_w = 2\pi \cdot 12000;\ \omega_s = \omega_w = 0;$$

$$A_s / A_w = 2;\ \aleph(n) = 0,$$

and the voice modulation waveforms were arbitrary 10 second sound bites, each with a 4 kHz modulation bandwidth (corresponding to a mod index of 3). This is a particular stressing example since the signals are 100% spectrally overlapped. Using the above design rules (from [2]), we would choose the following CCPLL loop parameters

- Strong-signal tracking loop:

$$Loop\ gain\ \alpha_s = \sqrt{8(k_s / 2\pi)W_s} \approx 15\ kHz$$

$$Integral\ gain\ K_s \approx \alpha_s$$

- Weak-signal tracking loop:

$$Loop\ gain\ \alpha_w = \frac{A_s}{A_w}\sqrt{8(k_w / 2\pi)W_w} \approx 39\ kHz$$

$$Integral\ gain\ K_w \approx \alpha_w / 2 = 19.5\ kHz$$

However, our optimization study revealed a much more stable solution with the following parameters

- Strong-signal tracking loop:

$$Loop\ gain\ \alpha_s \approx 20\ kHz = K_s$$

- Weak-signal tracking loop:

$$Loop\ gain\ \alpha_w \approx 30\ kHz$$

$$Integral\ gain\ K_w \approx 18\ kHz$$

Thus, the design rules in this example underestimate the strong loop parameters but overestimate the weak loop gain parameter. Using the above optimized parameters, we find the audio quality of the resulting CCPLL demodulated outputs to be intelligible and furthermore the outputs are stable for both voiced and un-voiced segments; although in the latter case some audio leakage into the weak audio output channel is discernible during weak signal, un-voiced segments.

4. SUMMARY

Using the difference amplitude CCPLL structure derived in [4], we have been able to successfully separate FM voice signals. However in doing so, we have found that existing design rules developed in [2] are not adequate for determining stable CCPLL loop parameters. In contrast, loop parameters derived from numerical optimization result in much more stable performance.

For given signal frequency deviations, amplitude ratios and modulation bandwidths, we have found that CCPLL performance is remarkably stable using the optimized CCPLL loop parameters, regardless of the specific voice waveforms. This suggests that we can derive robust CCPLL loop parameters which depend only on the signal mod indices as well as the ratio of strong-to-weak signal amplitudes. This is an important area for further investigation.

5. REFERENCES

[1] Cassara F., Schachter H., and Simowitz G. "Acquisition Behavior of the Cross-Coupled Phase-Locked Loop FM Demodulator". *IEEE Trans, Comm.*, 25:897-904, 1980.

[2] Say S. "Vector-Locked Loop Interference Canceller". *Ph.D. thesis*, Polytechnic Institute of New York, 1985.

[3] Hedstrom B., and Kirlin R. "Co-Channel Signal Separation using Coupled Digital Phase-Imcid Loops". *IEEE Trans, Comm.*, 44:1373-1384, 1996.

[4] Zimmerman G. "Applications of Frequency Modulation Interference Cancellers to Multiaccess Communications Systems". *Ph.D. thesis*, California Institute of Technology, 1990.