AIAA-2002-4824

FLIGHT PATH CONTROL STRATEGIES FOR THE 2003 MARS EXPLORATION ROVER (MER) MISSION

Behzad Raofi*† [braofi@jpl.nasa.gov, (818)354-4523],
Ramachandra S. Bhat* [Ramachand.bhat@jpl.nasa.gov, (818)393-0979],
Louis A. D'Amario*‡ [louis.damario@jpl.nasa.gov, (818)354-3209]
Jet Propulsion Laboratory, California Institute of Technology,
Pasadena, CA 91109-8099

Abstract

The Mars Exploration Rover (MER) Project will launch two spacecraft (MER-A and MER-B) to Mars in 2003 with the objective of delivering two Rovers to different landing sites on Mars to study the surface composition and to look for evidence of present or past water. This paper describes the methods used to estimate the statistical ΔV and propellant requirements for propulsive maneuvers necessary to deliver the two Rovers while ensuring that planetary protection requirements are satisfied. Maneuver analysis results for four different trajectories, open and close of launch periods for each of the two MER missions, are presented. The results for the two representative landing sites (MER-A: Melas Chasma, MER-B: Hematite) indicate that the MER-A Open case has the most demanding propellant requirement (~43 kg), and that the inertial atmospheric entry flight path angle delivery requirements of -11.5 ± 0.17 (3σ) deg for MER-A and -11.5 ± 0.20 (3σ) deg for MER-B are achievable

Introduction

The MER Project will launch two spacecraft, referred to as MER-A and MER-B, in the 2003 opportunity with the objective of delivering two surface Rovers to different near-equatorial landing sites on Mars. During the baseline 91 Martian Sol (~93.5 Earth day) surface mission, each Rover will collect data about the composition of targeted Martian soil and rocks, and also will provide images and spectra to document the target surroundings and the landing sites. Both missions have 18-day primary launch periods: May 30, 2003 through June 16, 2003 for MER-A and June 25, 2003 through July 12, 2003 for MER-B. MER-A will arrive at Mars on January 4, 2004, and MER-B will arrive at Mars on January 25, 2004. Both spacecraft follow a Type 1 trajectory to Mars.[§]

Both MER flight systems are planned to be interchangeable, and consist of a Cruise Stage, an Entry, Descent and Landing (EDL) system (including heatshield, backshell, parachute, retro-rockets, airbags and Lander structure), and a Rover, which is enclosed inside the Lander.

During the approximately 7 month interplanetary transfer to Mars, which includes the Cruise and Approach mission phases, six Trajectory Correction Maneuvers (TCMs) are planned to deliver each flight system to the specified Mars atmospheric entry aimpoint. The EDL phase begins at the atmospheric entry interface point, which is defined to be at a Mars radius of 3522.2 km.

EDL will adapt the concept developed for Mars Pathfinder: first employing a heatshield and a parachute to slow descent through the Martian atmosphere, then firing retro-rockets to reduce landing speed, and finally utilizing airbags to cushion surface impact. After the airbag assembly rolls to a stop, the system will retract the airbags, open the three Lander petals while righting the landing structure, and prepare the Rover to leave the Lander.

---

* Member of Engineering Staff, Navigation and Mission Design Section.

† Member AIAA.

‡ Member AAS and AIAA Associate Fellow.

Copyright © 2002 by the American Institute of Aeronautics and Astronautics, Inc. The U.S. Government has a royalty-free license to exercise all rights under the copyright claimed herein for Governmental purposes. All other rights are reserved by the copyright owner.

§ The analyses reported in this paper are based on an earlier mission design baseline (e.g., launch period). Although the current baseline has some differences, the results in the paper are, nevertheless, valid.

Both Landers will land early in the Martian afternoon while the Earth is still in view, allowing the transmission of Multiple-Frequency Shift Key (M-FSK) tones, which are coded to indicate completion of critical events during EDL.

The Rovers are capable of traveling over 40 m in a single Sol and a total traverse distance during the Surface mission of up to 1000 m. Science data is returned to Earth via either a direct-to-Earth (DTE) X-band link from the Rover (using a Low Gain Antenna (LGA) and a High Gain Antenna (HGA)) or via a UHF link to the Mars Odyssey or Mars Global Surveyor (MGS) orbiters.

Reference 1 presents a mission overview for the 2003 MER mission, and Reference 2 discusses the orbit determination analyses performed for the mission.

Spacecraft Configuration

Figure 1 shows the MER spacecraft in cruise configuration. The design of the MER flight system is an adaptation of the Mars Pathfinder spacecraft design. As such, during flight, MER is a spin-stabilized spacecraft with a nominal spin rate of 2 rpm. The MER flight system consists of four major components: cruise stage, backshell, Lander structure (containing the Rover), and the heatshield. The mass allocation for the entire flight system (including propellant load) is 1065 kg.

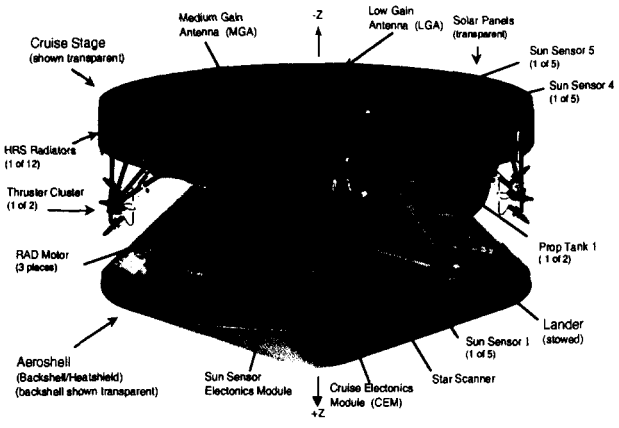

Figure 1. MER Spacecraft in Cruise Configuration

The cruise stage includes solar panels, the propulsion system, the Attitude Control System (ACS), and LGA and MGA antennas for X-band communications with Earth. Both antennas are oriented in the spacecraft –Z direction. The cruise stage is separated from the backshell/heatshield assembly approximately 15 min prior to Entry.

Spacecraft Propulsion System

The MER propulsion system includes the hardware needed to perform spin and attitude control and TCMs during Cruise and Approach. The propulsion system hardware is a monopropellant hydrazine system that includes two propellant tanks and eight thrusters in two clusters of four thrusters each (see Figure 2).

At launch, these tanks can be loaded with a maximum of 52 kg of propellant. The thrusters each produce ~4.6 N thrust at the initial tank pressure of 390 psia; at end of life, each thruster produces ~1.8 N thrust at a residual pressure of 149 psia. The thruster cluster assemblies are diametrically opposed, and each contains four thrusters. On one side of the spacecraft, thrusters 1 through 4 are aligned 40 deg off the spacecraft –X axis; that is, starting from a –X orientation, the thrusters are pointed 40 deg toward the +Z direction and 40 deg toward the –Z direction in the X-Z plane, and 40 deg toward the +Y direction and 40 deg toward the –Y direction in the X-Y plane. Thrusters 5 through 8 are aligned 40 deg off the +X axis in a similar fashion on the opposite side of the spacecraft.

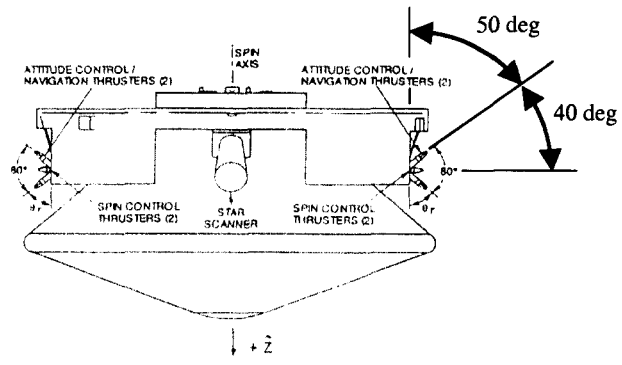

Figure 2. Spacecraft Thruster Configuration

An axial burn imparts a ΔV in the +Z or –Z direction, i.e. along the spin axis. Axial burns are performed by firing pairs of thrusters in steady state mode. The desired ΔV for an axial burn is achieved by firing the thrusters for a specified length of time.

A lateral burn imparts a ΔV in a direction approximately normal to the spin axis. The spacecraft rotates at 2 rpm about the +Z axis. At the appropriate orientation in the spin cycle, the four thrusters of one thruster cluster are each pulse-fired typically for 5 seconds. Fifteen seconds (one-half revolution) later, the other cluster's four thrusters are each pulse-fired for 5 seconds. Because the spacecraft's center of mass is located further along the +Z axis than the thruster clusters, the two thrusters (one per cluster)

which provide ΔV in the –Z direction are fired for a shorter duration than 5 seconds. This causes the net thrust from firing each cluster's four thrusters to point through the spacecraft center of mass, thus eliminating attitude perturbations. The desired ΔV for a lateral burn is achieved by repeating the process described above for a specified number of pulses.

Spacecraft attitude maneuvers (turns) and spin-rate control are accomplished by pulse-mode firing of coupled thruster pairs. There are two sets of thruster pairs that can be used for these maneuvers.

Spacecraft Telecom System

The MER telecommunications subsystem uses X-band for DTE communications during all mission phases and a UHF system during EDL (after bridle deployment) and also on the surface for relay communications through the Mars Odyssey and MGS orbiters.

The X-band telecommunications system design is single-string coherent X-Band Uplink/X-Band Downlink with electronics located in the Rover. The same X-band electronics are used from launch through end of mission, but four different sets of X-band antennas are required:

- A Medium Gain Antenna (MGA)-LGA pair on the cruise stage for communications during interplanetary flight.
- A backshell-mounted LGA to support communications during EDL.
- One small patch LGA on the Lander base petal to support communications after landing and prior to Rover deployment.
- An HGA-LGA pair on the Rover for surface operations.

The single-string UHF equipment is also in the Rover and is used with two different antenna sets:

- A UHF antenna mounted on the Lander structure to support communications during EDL.
- A UHF antenna mounted on the Rover for surface communications.

Spacecraft Attitude Maintenance Strategy

The two communications antennas (LGA and MGA) and the solar panels are oriented along the spacecraft –Z axis. The attitude strategy during early cruise, when the Sun-Spacecraft-Earth (SPE) angle is large (up to 100 deg), is to maintain the –Z axis pointed between the direction to the Earth and direction to the Sun. This strategy allows a telecom link to Earth using the LGA, while providing sufficient power for spacecraft operations. Once the SPE angle becomes small enough, the attitude strategy changes to one which maintains the –Z axis pointed to within ±8 deg of Earth, in preparation for switching the telecom link to the MGA which occurs somewhat later. The solar panels still provide sufficient power, because the SPE angle is not as large.

Since the MER spacecraft is spin-stabilized, its attitude remains inertially fixed as long as there are no thruster firings. The ACS, which includes a star scanner, Inertial Measurement Unit (IMU), and Sun sensors, will command the thrusters to fire to perform attitude maneuvers to accomplish the attitude strategy described above. The total number of attitude maneuvers in the current strawman strategy (including a practice turn prior to TCM-1, but not counting the turns required for ACS/NAV characterization or the final turn to the Entry attitude) is 13 for MER-A and 12 for MER-B. The average time between attitude maneuvers is 16-18 days, depending on the exact launch date and MER-A vs. MER-B.

During attitude maneuvers, the thrusters are fired as couples, so that there should be no net ΔV imparted to the spacecraft. However, because of thruster misalignments and plume impingement effects, there generally will be a residual ΔV. It is important to model the ΔVs resulting from these "ACS events" in the orbit determination process in order to satisfy the delivery accuracy requirements for atmospheric entry. The Flight System is required to limit the residual ΔV resulting from ACS events for accurate modeling of the trajectory.

Navigation System

The navigation system consists of three general functional elements: spacecraft trajectory propagation and analysis, spacecraft trajectory and Rover position determination, and propulsive maneuver design and analysis. The primary navigation functions during MER cruise and approach operations are: (1) process radiometric tracking data to estimate the spacecraft trajectory and associated uncertainties, (2) determine the desired ΔV vector for TCMs to achieve the specified atmospheric entry aimpoint and verify the TCM implementation provided by spacecraft team.

Orbit Determination

Orbit determination (OD) is the process of determining the trajectory of the spacecraft based on radiometric tracking data. The OD solutions developed from this process are used for the

generation of high-precision numerically integrated trajectories and related trajectory data products. These products include: prediction of the atmospheric entry conditions at Mars for propulsive maneuver design and for atmospheric trajectory simulations, and generation of estimates of areocentric Rover position during Surface operations.

The baseline radiometric data types that will be used for MER orbit determination are two-way coherent Doppler, two-way ranging, and ΔVLBI (Delta Very Long Baseline Interferometry) measurements generated by the DSN X-band tracking system. The first two data types are derived from a coherent radio link between the spacecraft and a receiver at a DSN ground station. The type of ΔVLBI measurements that will be acquired for MER is the Delta Differential One-way Range (ΔDOR) data type.

Maneuver Analysis and Design

In order to achieve a successful landing on Mars, the MER spacecraft must be delivered to the proper Mars atmospheric entry aimpoint by a series of TCMs. A total of six TCMs are planned during interplanetary cruise. These maneuvers are required to compensate for launch vehicle injection errors and subsequent maneuver execution and OD errors.

Propulsive Maneuver Calculations

For each maneuver, the magnitude and direction of the velocity change required to correct for errors in the desired Mars arrival conditions must be computed. These quantities are determined from an estimate of the actual arrival conditions obtained through the OD process. In addition, a means of estimating the statistics of the residual guidance errors due to imperfect maneuver execution is needed. These statistics are derived from estimates of the maneuver execution accuracy and the OD error statistics computed as part of the OD process.

Propulsive Maneuver Implementation Modes

In the most general sense, a desired ΔV can be achieved in one of three different ways, a turn and pure axial burn, a turn and pure lateral burn, or the vector sum of a combination of two ΔV components, where each component can be an axial or a lateral burn. In order to provide communication with Earth and satisfy spacecraft power and thermal constraints during maneuvers, the spacecraft –Z axis must be pointed within a specified angle relative to both the Earth and Sun directions. At TCM-1 the angle between the –Z axis and the direction to the Sun must be less than 60 deg, and the angle between the –Z axis and the direction to the Earth must be less than 80 deg. Consequently, the spacecraft is not free to rotate to any arbitrary direction in order to execute a maneuver. The combination of these pointing constraints creates a region, referred to as *constraint overlap region*, within which the –Z axis can be pointed while satisfying all constraints.

If the desired ΔV lies within the constraint overlap region, a turn and continuous axial burn maneuver is performed. If the direction opposite to the desired ΔV lies within the constraint overlap region, a turn and axial burn maneuver may also be performed, because the spacecraft has thrusters that provide ΔV in both the –Z and +Z directions. However, if the desired ΔV lies in a direction where the spin axis cannot be pointed, the maneuver must be performed as the vector sum of two component ΔVs (called vector mode), with one exception. If it is possible to point the lateral thrusters in the desired ΔV direction while maintaining the –Z axis pointing constraints, then the maneuver is performed as a turn and pure lateral burn.

Due to the potentially large ΔV for TCM-1, all implementation modes described above are considered. However, TCMs 2 through 6 are all small maneuvers (~3 m/s or less at the 99% probability level). Hence, for operational simplicity, TCMs 2 through 6 are implemented in vector mode.

The physical orientation of axial and lateral thrusters relative to the desired thrust directions (thruster cant angles) affect their respective inefficiency factors and will be discussed in detail later. It should be noted that the axial thrusters have a 50 deg cant angle, while the lateral thrusters have a 40 deg cant angle. Even taking into account other lateral thruster inefficiency factors (such as the finite burn arc penalty and lower I_{sp}), lateral thrusters have a slightly smaller inefficiency factor and may be preferred in some cases. An axial burn can be accomplished in one continuous thruster firing. Conversely, a lateral burn must be accomplished by pulsing the selected thrusters over some fraction of a spin period. A thruster firing arc of ±30 deg (±2.5 sec) relative to the desired lateral ΔV direction is being used for lateral burns.

Maneuver Execution Accuracy

The accuracy with which a given maneuver can be executed is a function of the propulsion system behavior and the attitude control system, which maintains the pointing of the spacecraft during thruster firings. Maneuver execution errors are described in terms of components that are proportional to the commanded ΔV magnitude and components that are independent of ΔV magnitude. For TCM-1, the MER spacecraft design is required to

satisfy the following maneuver execution accuracy requirements:

Proportional magnitude error (3σ)	5%
Proportional pointing error, per axis (3σ)	50 mrad (2.9 deg)
Fixed magnitude error (3σ)	6 mm/s
Fixed pointing error, per axis (3σ)	6 mm/s

TCM Profile

A series of six TCMs are planned during the Cruise and Approach phases of the mission. Table 1 lists, for each TCM, the name, nominal execution time, OD data cutoff time, and a description of the maneuver.

be used to further adjust the atmospheric entry conditions to improve the likelihood of landing in a scientifically interesting location. On the other hand, in the event that TCM-5 is not executed, for whatever reason, TCM-6 is the final opportunity to ensure that the delivery accuracy requirements are met. It is possible that, given a successful TCM-5, the project will decide not to execute TCM-6. It is important to note that even though TCM-6 may not be executed, it is being treated and prepared for in exactly the same manner as the other Approach phase maneuvers and is included in the baseline mission plan for both MER-A and MER-B.

Table 1. Interplanetary Cruise/Approach TCM Profile

TCM	Time*	OD Data Cutoff*	Description
TCM-1	L + 15 days	L + 10 days	Correct injection errors; remove injection bias.
TCM-2	L + 60 days	L + 55 days	Correct TCM-1 errors; target to entry aimpoint (vector-mode maneuver).
TCM-3	E – 60 days	E – 65 days	Correct TCM-2 errors (vector-mode maneuver).
TCM-4	E – 8 days	E – 8.5 days	Correct TCM-3 errors (vector-mode maneuver).
TCM-5	E – 2 days	E – 2.5 days	Final entry targeting maneuver (vector-mode maneuver).
TCM-6	E – 6 hrs	E – 18 hrs	Final entry targeting maneuver opportunity.

* Time measured from Launch (L) or Entry (E).

The locations of the TCMs are chosen as a compromise between competing requirements:

- Provide sufficient time between Launch and TCM-1 for spacecraft checkout and design of TCM-1.
- Provide sufficient time between TCMs to allow for TCM reconstruction, OD, and sequence generation for the upcoming TCM.
- Minimize operational complexity.
- Minimize Mars atmospheric entry delivery errors.
- Minimize total mission propellant usage.

There are three TCMs planned during the Approach phase: TCMs 4, 5, and 6. These maneuvers, as listed in Table 1, adjust the trajectory to the desired atmospheric entry conditions. TCM-5 at Entry – 2 days is the final entry targeting maneuver for landing site safety. In other words, TCM-5 is the last maneuver required to achieve the entry flight path angle delivery accuracy requirements. TCM-6 at Entry – 6 hours is the final opportunity to perform a TCM. If TCM-5 is executed as planned, TCM-6 may

The OD data cutoff for TCMs 1 through 3 is placed 5 days prior to execution of the TCM. For TCMs 4 through 6, the OD data cutoff is placed 12 hours prior to execution of the TCM. The data cutoff for the final three TCMs is closer to the TCM in order to reduce navigation tracking data latency, thereby improving entry delivery accuracy. TCMs 1 and 2 will be developed as standard maneuver sequences that are built and tested on the ground and then uplinked to the spacecraft for execution. The time required for this ground process is 5 days (of prime shift work). TCMs 3 through 6, however, will utilize the so-called "Auto-TCM" behavior. The commands to execute the TCM are part of flight software that is loaded prior to launch. The ground TCM design process determines a set of parameters that govern the execution of the TCM, and these parameters are uplinked to the spacecraft prior to scheduled execution. (The "Auto-TCM" behavior includes logic that can detect faults and, after recovery from the fault, resume execution of the TCM.) The ground process for determining Auto-TCM parameters and uplinking them to the spacecraft is planned to be accomplished in 6 hours. In order to provide two uplink opportunities over different DSN complexes, the OD data cutoff for TCMs 4 through 6 is placed 12 hours prior to

execution of the TCM. Even though TCM-3 will also utilize the "Auto-TCM" behavior (and associated ground design process), the OD data cutoff has been placed 5 days prior to the TCM. The reason for this is that tracking data latency does not significantly affect TCM-3 delivery errors, and this also allows for development of TCM-3 on the less-demanding 5-day template, if desired.

Landing Sites

The possible landing sites for the MER-A mission are restricted to a latitude band between 5 deg North and 15 deg South. For MER-B, the range of possible latitudes for the landing site is from 10 deg North to 10 deg South. The candidate landing sites assumed for these analyses are Isidis, Hematite, Melas, and Gusev for MER-A and Isidis, Hematite, and Melas for MER-B. The landing site locations used in the navigation analyses are listed below:

MER-A Landing Sites

	Navigation Analyses		
Name	ID	Latitude**	Longitude**
Isidis Planitia	IP85A	4.62 N	85.21 E
Hematite	TM10A	2.2 S	353.23 E
Melas Chasma	VM53A	8.68 S	282.07 E
Gusev Crater	EP55A	14.67 S	175.75 E

MER-B Landing Sites

	Navigation Analyses		
Name	ID	Latitude**	Longitude**
Isidis Planitia	IP96B	4.55 N	84.01 E
Hematite	TM20B	1.98 S	353.82 E
Melas Chasma	B Site	8.68 S	282.07 E

**MOLA (IAU 1991) reference frame.

The latitude of the landing site is a key parameter for navigation, since it has a significant effect on entry delivery accuracy and the size of the landing footprint. At approximately two months before launch, specific landing sites will be selected for each mission in order to support preparations for TCM-1. At TCM-1 (Launch + 15 days), the injection bias is removed, and the trajectory is targeted to an atmospheric entry aimpoint that achieves the desired landing site on Mars.

Maneuver Analysis Results

This section describes the results of maneuver analyses performed to determine the navigation delivery accuracy, the statistics of planned TCMs, and propellant mass required to accomplish the MER-A and MER-B missions.

The goal of the maneuver strategy and design is to minimize propellant expenditure while satisfying the numerous constraints that are placed on the mission. Sufficient propellant must be loaded to account for uncertainties such as launch vehicle injection dispersions and requirements such as those dealing with planetary protection. TCMs are inherently statistical in nature (i.e., non-deterministic), since they are required to correct for dispersions caused by injection dispersions, OD errors, and maneuver execution errors. The statistical maneuver analysis process estimates the ΔV budget and corresponding propellant required for a given probability level (e.g., 99%). This section describes the results of the analyses performed to establish the statistical properties of the TCMs planned for guidance of the spacecraft and the propellant mass required for accomplishing the mission. Injection aimpoint biasing for planetary protection is also included.

For the maneuver analysis results presented below, references are made to a number of different trajectories – for example, "MER-A Open". The launch dates, required C_3, and landing sites associated with the trajectories referred to below are as follows:

Trajectory	Launch Date	C_3 (km^2/s^2)	Landing Site
MER-A Open	5/30/03	9.30	Melas (VM53A)
MER-A Close	6/16/03	9.30	Melas (VM53A)
MER-B Open	6/25/03	10.43	Hematite (TM20B)
MER-B Close	7/12/03	16.35	Hematite (TM20B)

Delta II Injection Errors and Figure of Merit

Injection covariance matrices (ICMs) for the MER spacecraft are provided by Boeing (the provider of the Delta II launch vehicles) to describe the expected launch vehicle injection errors. These ICMs are provided for the open and close of the 18-day launch periods for both MER-A and MER-B. The probability of commanded shutdown (PCS) of the Delta II second stage engine is assumed to be 99%. The corresponding injection velocity deficit tables (containing injection velocity deficit magnitudes and corresponding probabilities) and the associated injection state sensitivities to velocity deficits are also provided for each ICM. These ICMs can be mapped to the Mars encounter B-plane (Appendix), where the dispersions can be visualized. Boeing has also provided injection velocity deficit tables for several other PCS probability levels, including PCS 95% for MER-A open. For MER-A open, in addition to PCS 99%, an analysis was also performed for PCS 95%.

The injection error is characterized by two key parameters, which are Figure of Merit (FOM) and probability of impact at Mars. FOM is a measure of the ΔV required at TCM-1 to correct for the injection errors in the absence of any other errors or target biasing. FOM provides a single measure for

comparison of ICMs. Since the majority of the interplanetary ΔV will be expended at TCM-1 (primarily to correct for injection errors), the injection accuracy has a significant impact on required propellant. This, in turn, affects the spacecraft design in areas such as propulsion (tank sizing) and attitude control subsystems. Table 2 presents the FOM results and injection dispersions mapped to Mars B-plane.

statistical ΔV cost (i.e., 99% ΔV required), the aimpoint with the minimum statistical ΔV cost can be determined.

Figure 3 shows, for MER-A Open (a representative case), the 1σ injection dispersion ellipse, the 10^{-4} PP ellipse, the selected biased injection aimpoint, and the third stage B-plane impact point. The size, shape, and orientation of the 1σ and

Table 2. Injection Errors Mapped to Mars B-plane and FOM Data

		MER-A (Melas)		MER-B (Hematite)	
		Open	Close	Open	Close
Launch Date/Time		5/30/03 19:03	6/16/03 18:04	6/25/03 5:50	7/12/03 3:26
C_3 (km^2/s^2)		9.301	9.303	10.431	16.351
Flight Path Angle (deg)		4.35	4.35	4.80	5.79
TCA (ET)		1/4/04 21:20	1/4/04 21:40	1/25/04 04:54	1/25/04 04:51
Delivery Ellipse					
SMMA	(km)	458,306	327,369	406,253	282,942
SMIA	(km)	44,354	46,565	58,936	80,220
Orientation Angle	(deg)	43.9	42.1	38.0	29.3
Sigma B.R	(km)	319,271	222,224	254,343	155,003
Sigma B.T	(km)	331,780	244,857	322,218	249,932
Correlation Coef.		0.981	0.960	0.956	0.810
Sigma LFT	(days)	2.417	2.003	1.330	0.891
Figure of Merit ΔV Estimates for TCM-1 at L+15 days					
FOM	**(m/s)**	**17.85**	**17.89**	**15.49**	**16.15**

Injection Aimpoint Biasing for Planetary Protection

Planetary protection (PP) requirements state that after injection the probability of the launch vehicle upper stage impacting Mars shall be less than 1.0×10^{-4}. In order to meet this PP constraint, it is necessary to bias the injection aimpoint away from Mars.

One method to select the biased injection aimpoint is to manually sample points on the 10^{-4} PP ellipse (the ellipse in the Mars B-plane corresponding to a probability of impact of 1.0×10^{-4}) to identify the point that has the minimum ΔV to remove the injection bias. The biased aimpoint that minimizes the ΔV to remove the bias is of limited usefulness, since it minimizes only the deterministic ΔV associated with the biased aimpoint. This aimpoint may not provide the minimum statistical ΔV given known error sources, such as injection dispersions, OD errors, and maneuver execution errors. However, by sampling several points on the 10^{-4} PP ellipse on either side of the aimpoint corresponding to the minimum deterministic ΔV and then evaluating the

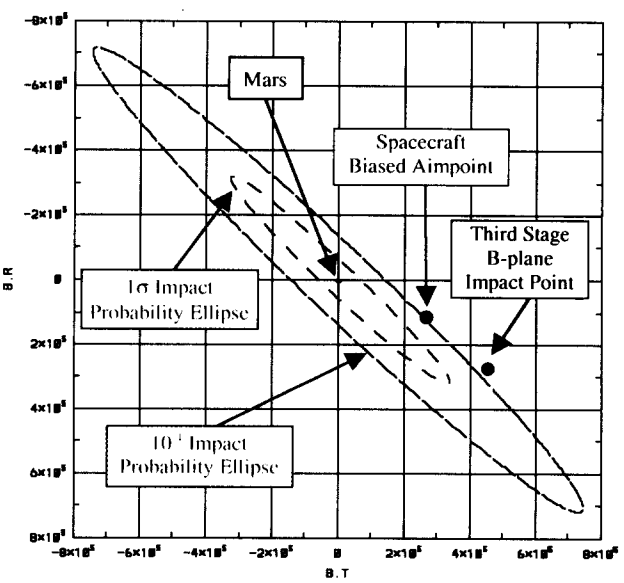

Figure 3. MER-A Open (5/30/03) Biased Injection Aimpoint Selection

10^{-4} PP ellipses depend on injection errors. Any aimpoint precisely on the 10^{-4} PP ellipse corresponds to a probability of impacting Mars of 1.0×10^{-4}. The biased injection aimpoint for the spacecraft is chosen such that the statistical ΔV cost required to remove the aimpoint bias is minimized while ensuring that the probability of the third stage impacting Mars is less than 1.0×10^{-4}. In order to provide margin with respect to the impact probability requirement, the biased injection aimpoint is selected such that probability of impacting Mars is 0.8×10^{-4}. This 20% margin is deemed prudent, because the launch vehicle trajectory design has not fully matured yet – as an example, the ICMs provided by Boeing may change in the future.

Table 3 presents the following information for cases corresponding to open and close of the MER-A and MER-B launch periods: the B·R, B·T, and ΔTCA components of the biased injection aimpoint, the corresponding impact probabilities for the spacecraft and the Delta third stage, and the deterministic ΔV at TCM-1 to remove the bias. TCM-1 is designed to combine the deterministic ΔV to remove the injection bias with the statistical ΔV to correct injection errors and will be discussed in detail in the next section.

execution errors, and the OD uncertainties. (For a more detailed description of how each perturbed sample trajectory is generated for the Monte Carlo analysis, the reader is referred to Reference 3.)

Table 4a presents the deterministic ΔV required to remove the injection aimpoint bias, and the ideal ΔV statistics for MER-A Open (5/30/03 launch). The ideal (or desired) ΔV represents the actual inertial velocity change in the trajectory and does not reflect losses due to propulsion system inefficiencies, such as thruster cant angle losses, or particular maneuver implementation modes.

Implemented (or effective) ΔV is different from the desired ΔV, however, because of spacecraft design constraints (e.g., thruster cant angles) and mission requirements (e.g., spin axis Sun and Earth pointing constraints for communications and solar power at TCM-1). Effective ΔV accounts for thruster cant angle losses (56% for axial thrusters and 31% for lateral thrusters), lateral ΔV losses due to finite burn arcs (4.7%), vector mode costs, and other maneuver implementation costs dictated by the Sun and Earth pointing constraints for TCM-1. The effective ΔV is subsequently used to calculate the propellant mass estimate for each sample of the Monte Carlo analysis. For all results presented below,

Table 3. Biased Injection Aimpoints

	MER-A (Melas)		MER-B (Hematite)	
Launch Day	**Open (5/30/03)**	**Close (6/16/03)**	**Open (6/25/03)**	**Close (7/12/03)**
Injection Bias:				
B·R (km)	100,000	85,000	240,000	250,000
B·T (km)	250,500	258,000	484,000	561,200
B (km)	269,723	271,641	540,237	614,366
TCA (ET)	1/5/04 13:01	1/5/04 17:58	1/26/04 10:22	1/26/04 12:53
ΔTCA* (hr)	15.689	20.296	29.461	32.035
Impact Probability:				
Spacecraft	7.98E-05	8.16E-05	8.10E-05	7.99E-05
Delta Third Stage	2.98E-05	3.70E-05	3.47E-05	4.20E-05
Deterministic ΔV (m/s)	14.83	15.04	15.86	18.80

TCA: Time of closest approach

*ΔTCA is relative to the closest approach time for the unbiased trajectory (positive ΔTCA ⇒ delayed TCA).

TCM ΔV and Propellant Statistics

TCM ΔV and propellant statistics, along with Mars atmospheric entry delivery accuracies, are estimated by performing 5000-sample Monte-Carlo analyses. These analyses include dispersions from the injection covariance and the 99% PCS data, TCM

the baseline Sun and Earth pointing constraints for TCM-1 are:

- Spacecraft -Z axis must be pointed within 60 deg of direction to the Sun.
- Spacecraft -Z axis must be pointed within 80 deg of direction to the Earth.

Table 4a. MER-A Open (5/30/03) Ideal ΔV

Event	Location	Deterministic ΔV* (m/s)	Ideal ΔV (m/s) Mean	1 σ	99%
TCM-1	L + 15d	14.83	22.07	10.29	48.95
TCM-2	L + 60d	0.0	0.77	0.59	2.75
TCM-3	E – 60d	0.0	0.08	0.07	0.33
TCM-4	E – 8d	0.0	0.10	0.04	0.22
TCM-5	E – 2d	0.0	0.04	0.02	0.10
Total ΔV		**14.83**	**23.07**	**10.67**	**51.26**
TCM-6**	E – 6h	0.0	0.33	0.15	0.73
Total ΔV**		**14.83**	**23.36**	**10.67**	**51.59**

* To remove the planetary protection injection bias
** Assumes TCM-5 does not occur

Table 4b. MER-A Open (5/30/03) Implemented ΔV and Propellant

Event	Implemented ΔV (m/s) Mean	1 σ	99%	Propellant Mass (kg) Mean	1 σ	99%
TCM-1	32.77	16.98	79.45	15.85	8.02	38.01
TCM-2	1.50	1.18	5.45	0.72	0.56	2.60
TCM-3	0.16	0.13	0.64	0.08	0.06	0.30
TCM-4	0.19	0.08	0.42	0.09	0.04	0.20
TCM-5	0.08	0.03	0.16	0.04	0.02	0.08
Total	**34.69**	**17.71**	**82.42**	**16.77**	**8.35**	**39.42**
TCM-6*	0.59	0.27	1.34	0.28	0.13	0.64
Total*	**35.20**	**17.71**	**82.95**	**17.02**	**8.35**	**39.67**

* Assumes TCM-5 does not occur

Table 4b presents the effective ΔV and corresponding propellant mass statistics for MER-A Open (5/30/03) as a representative case.

Mission ΔV and Propellant Requirements

Propellant mass requirements for the mission include both TCM and ACS propellant. The previous section presented the TCM propellant mass requirements. ACS propellant requirements are given in Table 5.

Simply adding the 99% ACS and TCM propellant requirements would be overly conservative. A more accurate method for correctly representing the overall mission propellant mass requirements at 99% probability is to combine the TCM and ACS probability distributions. This provides savings of about 1.4 kg. That is, the combined distribution total propellant at 99% probability is about 1.4 kg less than the result obtained by simply adding the individual TCM and ACS 99% values. The 1.4 kg savings is incorporated (somewhat arbitrarily) into mission propellant requirements by showing the ACS propellant requirement as 3.0 kg.

Table 6 presents the mission ΔV and propellant mass requirements at 99% probability for MER-A Open and Close and MER-B Open and Close. The 99% ΔV and propellant values in the table correspond to the scenario where TCM-5 does not occur, and TCM-6 is performed. The reason for this assumption is that the ΔV and propellant requirements are slightly higher than for the scenario where TCM-5 is performed and TCM-6 does not occur. The MER-A Open case (launch on 5/30/03) has the most demanding mission ΔV and propellant requirements of the four trajectories analyzed.

The 99% mission propellant requirements shown in Table 6 assume that TCM-1 is executed at L + 15 days. Any delay in TCM-1 execution causes the magnitude of the maneuver to increase, thereby increasing the mission propellant requirements at

Table 5. ACS Propellant Requirements

	Mean	1σ	Probability of Occurrence
Despin from 12 rpm to 2 rpm following launch*	0.47	0.04	100%
ACS/NAV Characterization	0.11	0.00	100%
Attitude maintenance turns*	0.21	0.02	100%
Turn to Entry attitude*	0.12	0.01	100%
TCM-1 turns	0.32	0.01	100%
5% "tax" on TCM propellant (attitude/spin clean-up after TCMs)*	1.50	0.07	100%
Fault protection response (Sun conings or turns to Sun)	2.00	0.00	10%
*Includes 50% contingency.			
	Mean	1σ	99%
Resultant ACS propellant distribution	2.9	0.6	4.4

Table 6. Mission ΔV and Propellant Requirements (99%)

	MER-A (Melas)		MER-B (Hematite)	
Launch Day	**Open (5/30/03)**	**Close (6/16/03)**	**Open (6/25/03)**	**Close (7/12/03)**
ΔV_{99} (m/s)	83.0	79.5	69.1	72.8
ΔM_{99} (kg)				
TCM	39.8	38.2	33.2	35.0
ACS	3.0	3.0	3.0	3.0
Total	42.8	41.2	36.2	38.0
Propellant Allocation	47.0	47.0	47.0	47.0
Propellant Margin	4.2	5.8	10.8	9.0

ΔV_{99} and ΔM_{99} are the required ΔV and propellant mass at 99% probability.
Scenario assumes TCM-5 does not occur and TCM-6 is performed.
Value for ACS propellant represents effect of combining TCM and ACS distributions.

99% probability, or, equivalently, reducing the probability level below 99% assuming propellant was loaded for TCM-1 at L + 15 days. To allow for possible TCM-1 delays, the navigation system is required to determine mission propellant requirements such that there is sufficient propellant with at least 90% probability for a TCM-1 delay of 15 days.

Table 7 shows that if propellant loading is based on the 99% propellant requirement for TCM-1 at L + 15 days, the probability of having sufficient propellant for TCM-1 delayed to L + 30 days is actually greater than 95% (but less than 99%). It should be noted that the results in Table 7 are for the scenario where TCM-5 is performed, and TCM-6 does not occur. However, the conclusion that there is sufficient propellant at greater than 95% probability for a TCM-1 delay of 15 days would also be true for the scenario where TCM-5 does not occur, and TCM-6 is performed.

Statistical analyses of mission ΔV and propellant requirements are based on a 99% probability assumption. The injection velocity deficit tables used for these analyses assume that the second stage of the

Table 7. Probability of Sufficient Propellant for Delayed TCM-1

	Launch Date	Total Propellant Mass Required (kg)				Prob.
		TCM-1 at L + 15 Days	TCM-1 at L + 30 Days			
		99%	90%	95%	99%	
MER-A Open	5/30/03	42.5	34.3	38.9	50.8	>95%
MER-A Close	6/16/03	40.9	34.2	38.5	50.2	>95%
MER-B Open	6/25/03	35.9	31.4	35.3	43.7	>95%
MER-B Close	7/12/03	37.7	33.6	37.6	45.9	>95%

Prob. = probability of having sufficient propellant for TCM-1 delayed to Launch + 30 days assuming propellant load corresponds to 99% propellant requirement for TCM-1 at L + 15 days.

Scenario assumes TCM-5 is performed and TCM-6 does not occur.

Delta II launch vehicle is loaded with sufficient propellant to provide a 99% PCS. Also, the MER spacecraft will be loaded with sufficient propellant to meet the 99% probability propellant mass requirements indicated in Table 6. However, current projections for Flight System mass indicate that it may exceed the injection mass capability of the launch vehicle. One way to accommodate a possible Flight System mass increase beyond the current allocated value (1065 kg) is to increase the launch vehicle injected mass capability by accepting a value for PCS that is below 99%. A reduction in PCS from 99% to 95% corresponds to an increase in injected mass capability of ~9 kg.

There is, however, a negative impact associated with decreasing PCS below 99%. Any decrease in PCS will cause an increase in the velocity deficit at injection, which will in turn cause an increase in spacecraft propellant requirements. In order to avoid a large increase in spacecraft ΔV and propellant requirements, which could nullify the increased injected mass capability, the probability level specified for ΔV and propellant requirements must also be decreased.

A statistical maneuver analysis was performed for MER-A Open (5/30/03), assuming a 95% probability for both PCS and mission ΔV and propellant requirements. The results are shown in Table 8. (It should be noted that the results in Table 8 are for the scenario where TCM-5 is performed, and TCM-6 does not occur; however, the conclusions that follow apply equally well for the scenario where TCM-5

Table 8. Mission ΔV and Propellant for 99% PCS/ΔV and 95% PCS/ΔV

	MER-A Open Melas (5/30/03)	
PCS Level	99%	95%
Probability Level for ΔV and ΔM	99%	95%
ΔV (m/s)	82.4	71.6
ΔM (kg)		
TCM	39.5	34.4
ACS	3.0	3.0
Total	42.5	37.4
Propellant Allocation	47.0	47.0
Propellant Margin	4.5	9.6

ΔV and ΔM are the required ΔV and propellant mass at the specified probability level.

Scenario assumes TCM-5 is performed, and TCM-6 does not occur.

Value for ACS propellant represents effect of combining TCM and ACS distributions.

does not occur, and TCM-6 is performed.) The total mission propellant requirement at the 95% probability level (with 95% PCS effects included) decreases by 5.1 kg as compared to a 99% probability level for total mission propellant and PCS. The combined effect of lowering the probability level from 99% to 95% is an increase in injected mass capability of ~14 kg (~9 kg from increased launch vehicle capability and ~5 kg from decreased mission propellant requirements). The obvious disadvantage of this strategy is an increase in mission risk of not having sufficient spacecraft propellant to cover injection and navigation dispersions between the 95th and 99th percentile.

Propellant Cost to Retarget Landing Site at TCM-1

The mission ΔV propellant requirements at 99% probability are given in Table 6. Note that the smallest propellant margin is 4.2 kg for the MER-A Open case. For the analyses that produced the results in Table 6, it was assumed that (for both MER-A and MER-B) TCM-1 is targeted to a landing site consistent with the landing site used for generation of the biased injection aimpoints that are reflected as launch vehicle targets.

The question has been raised as to whether it is possible to provide the flexibility of changing the landing site after launch – e.g., at TCM-1. This strategy would necessarily result in an additional propellant cost. A preliminary analysis indicated that a landing site latitude change of up to 20 degrees (the maximum latitude band for all the sites being considered) has a propellant cost of less than 0.4 kg. However, changes in landing site longitude (i.e., time of arrival changes) at TCM-1 are significantly more costly, prompting a more thorough analysis for longitude variations.

The initial list of most likely landing site candidates indicated that the maximum longitude range to be covered by each mission is approximately 180 degrees. Therefore, if each mission were to target the midpoint of its respective longitude range at injection, a ±90° longitude change capability at TCM-1 would be sufficient to cover all candidate landing sites. However, for various reasons (such as landing site safety in terms of recent wind-model estimates of excessive horizontal winds at some sites), the initial list of viable landing sites has changed several times. This has prompted analyses to evaluate propellant cost for longitude change capabilities of ±120° for MER-A and ±140° for MER-B. (To date, not all the variations have been analyzed for all the trajectories.)

The propellant costs for retargeting the landing site at TCM-1 for the cases evaluated to date are shown in Table 9 (at 99% probability). A change in landing time of ±0.25 (0.33) Sol permits changing the landing site longitude by up to ±90 (120) deg. For these results, the baseline trajectories (before retargeting the landing site) were targeted to Melas for MER-A and Hematite for MER-B.

With regard to propellant cost, the results presented in Table 9 show that changing the longitude of the landing site by as much as 90 deg would cost approximately 1.5 kg for MER-A open and 1.2 kg for MER B close (the most propellant demanding case for each mission). A 120 deg longitude change would cost 2.3 kg for MER A open, 1.8 kg for MER A middle, and 2.0 kg for MER-A close. The most recent updates by the landing site selection committee indicate a ±95 deg retargeting capability for MER-A and a ±135 deg retargeting capability for MER-B are required to cover all candidate landing sites. The required propellant costs for these capabilities are estimated to be approximately 1.6 kg for MER-A and 3.0 kg for MER-B.

Not including the propellant cost for landing site retargeting, MER-A open is the most demanding case regarding mission-total propellant requirements (Table 6). Therefore, to allow for retargeting the

Table 9. Propellant Cost to Retarget Landing Site at TCM-1

	Launch Date	Propellant Cost, Kg (99% Probability)					
		Longitude Change (degrees)					Latitude Change
		120° East	90° East	No Change	90° West	120° West	±10°
MER-A Open	5/30/03	0.5	-0.3	0.0	1.5	2.3	≤ 0.2
MER-A Middle	6/8/03	1.5	N/A	0.0	N/A	1.8	N/A
MER-A Close	6/16/03	2.0	N/A	0.0	N/A	0.5	N/A
MER-B Open	6/25/03	N/A	N/A	0.0	N/A	N/A	≤ 0.1
MER-B Close	7/12/03	N/A	1.2	0.0	0.2	N/A	≤ 0.1

Longitude change: 90° (120°) corresponds to a change in time of arrival of 0.25 (0.33) Sols
Latitude change: From 5N to 15S for MER-A and from 10N to 10S for MER-B
N/A Data not available

landing site at TCM-1 (i.e., a combined latitude and longitude change), 1.7 kg of additional propellant will be included in the mission total propellant budget for both missions.

TCM Delivery Accuracy (Monte Carlo Analysis)

In Reference 2, delivery accuracies based on OD covariance analyses are presented and discussed for TCMs 4, 5, and 6. In this paper, delivery statistics for all TCMs, based on 5000-sample Monte Carlo analyses, are presented for MER-A open (05/30/03 launch) as a representative case. The Monte Carlo delivery statistics are considered to be more accurate because they include the effects of non-normally distributed error sources (such as the PCS effect). Table 10 shows the delivery statistics (B-plane coordinates and entry flight path angle) for each TCM for the MER-A Open trajectory. Columns 1 and 2 show the 1σ uncertainty in B·R and B·T, and column 3 shows the corresponding correlation coefficient. Column 4 presents the 1σ uncertainty in time of arrival at Mars – more specifically, linearized flight time. The next three columns of this table present the size and orientation (relative to the T axis) of the delivery ellipse in the B-plane. Finally, column 8 shows the uncertainty in the inertial atmospheric entry flight path angle.

Table 10. MER-A Open (5/30/03) Delivery Accuracy in Mars B-plane Coordinates

		σ B·R (km)	σ B·T (km)	ρ	σ LFT(sec)	SMAA (km)	SMIA (km)	θ (deg)	σ FPA (deg)
TCM-1	L + 15d	9072	11140	0.9384	5494	14150	2467	38.8	N/A
TCM-2	L + 60d	264.1	395.8	0.7421	123.0	449.6	155.8	30.4	N/A
TCM-3	E – 60d	46.16	45.71	0.0731	14.30	47.60	44.21	48.9	1.86
TCM-4	E – 8d	5.29	3.67	-0.2620	1.39	5.44	3.45	-72.4	0.14
TCM-5	E – 2d	2.99	1.47	-0.6540	0.58	3.17	1.05	-69.9	0.046
TCM-6*	E – 6h	2.11	1.21	-0.9765	0.08	2.42	0.23	-60.4	0.031

ρ = σ B·T and σ B·R correlation coefficient LFT = linearized flight time θ = delivery ellipse orientation angle relative to T axis

* Assumes TCM-5 does not occur

In general, delivery accuracy results from OD covariance analyses (Reference 2) compare very well with those from the maneuver Monte Carlo analyses. When comparing the results in Reference 2 to those in Table 10, it should be noted that delivery errors presented in Reference 2 are expressed as 3σ errors, whereas the delivery errors in Table 10 are expressed as 1σ errors.

Conclusions

In order to determine the statistical maneuver results and propellant requirements for the MER-A and MER-B missions while satisfying all mission constraints, a selected set of trajectories have been analyzed. To reduce the probability of impact at Mars by the launch vehicle upper stage to less than $1. \times 10^{-4}$, the launch vehicle injection aimpoint is biased approximately 270000 km away from Mars for MER-A and 540000 - 614000 kg (depending on the launch date) for MER-B. Although MER-B requires less propellant than MER-A, in order to allow for the flexibility to interchange the spacecraft between the two missions until very close to launch date, the current mission plan is to load both spacecraft with the same amount of propellant. Current best estimates suggest that 44.5 kg of propellant (including 1.7 kg for retargeting the landing site at TCM-1) would be sufficient to satisfy the mission propellant requirements to a 99% probability level. Therefore, the current 47 kg propellant allocation allows for a 2.5 kg propellant margin to allow for future uncertainties in our assumptions such as those related to deliveries of new injection covariance matrices by Boeing. The delivery accuracy results show that the stringent inertial atmospheric entry flight path angle delivery requirements of -11.5 ± 0.17 (3σ) deg for MER-A and -11.5 ± 0.20 (3σ) deg for MER-B are achievable at TCM-5 (Entry – 2 days). However, to allow for a final opportunity to improve atmospheric entry delivery accuracy, the current mission plan includes a TCM-6 at E-6 hours.

Appendix

The B-plane, shown in Figure 4, is a plane passing through the center of the target body and perpendicular to the incoming asymptote **S** of the hyperbolic flyby trajectory. Coordinates in the plane are given in the **R** and **T** directions, with T being parallel to the Mars Mean Equator plane of date. The angle θ determines the rotation of the semi-major axis of the uncertainty ellipse in the B-plane relative to the T axis and is measured positive right-handed about the S axis.

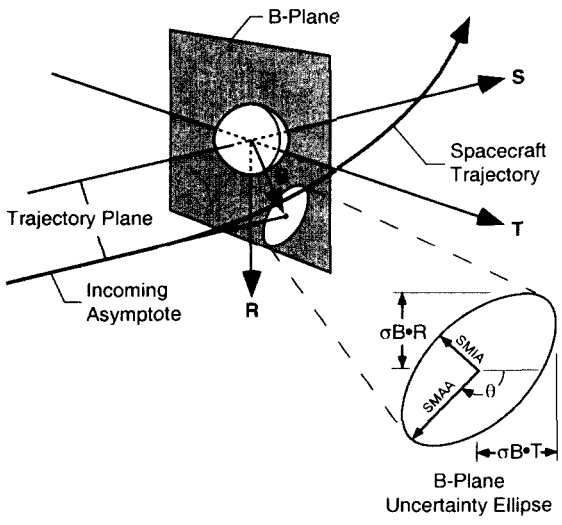

Figure 4. The B-plane coordinate system.

Acknowledgments

The work described in this paper was performed at the Jet Propulsion Laboratory, California Institute of Technology, under a contract with the National Aeronautics and Space Administration.

References

1. Roncoli, R.B., Ludwinski, J.M., "Mission Design Overview for the Mars Exploration Rover Mission," Paper AIAA 2002-4823, AIAA/AAS Astrodynamics Specialist Conference, Monterey, CA, 5-8 August 2002.
2. Portock, B.M., Haw, R.J., D'Amario, L.A., "2003 Mars Exploration Rover Orbit Determination Using ΔVLBI," Paper AIAA 2002-4814, AIAA/AAS Astrodynamics Specialist Conference, Monterey, CA, 5-8 August 2002.
3. Raofi, B., Guman, M.D., Potts, C.L., "Preliminary Statistical ΔV Analysis for a Representative Europa Orbiter Mission," Paper AIAA 2000-4035, AIAA/AAS Astrodynamics Specialist Conference, Denver, CO, 14-17 August 2000.