Airborne Rain Mapping Radar (ARMAR)

- ARMAR is a 13.8 GHz radar which can be operated on the NASA DC-8 aircraft
- ARMAR acquires rain reflectivity, Doppler velocity and polarization information over a +/- 25 degree scan
- It has collected data in a variety of tropical rainfall, including isolated convection, squall lines, and hurricanes
- ARMAR has recently been replaced by a new dual-frequency radar (13.4 and 35.6 GHz)
- Other airborne radars for precipitation include NOAA P-3 aircraft for hurricane research, NASA EDOP on ER-2 high-altitude aircraft

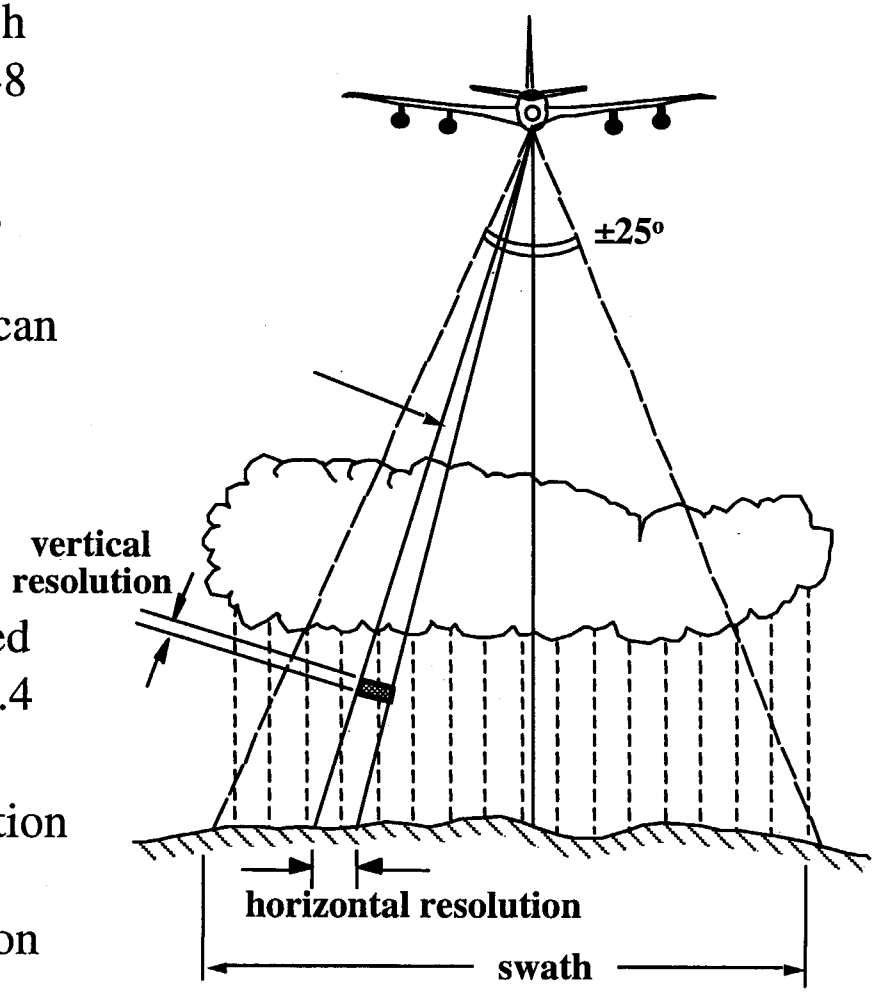

Courtesy JPL/Caltech

Radar View of Convective vs. Stratiform Rain

- Plots below show reflectivity profile from stratiform rain (solid line) and from convective rain (dashed line)

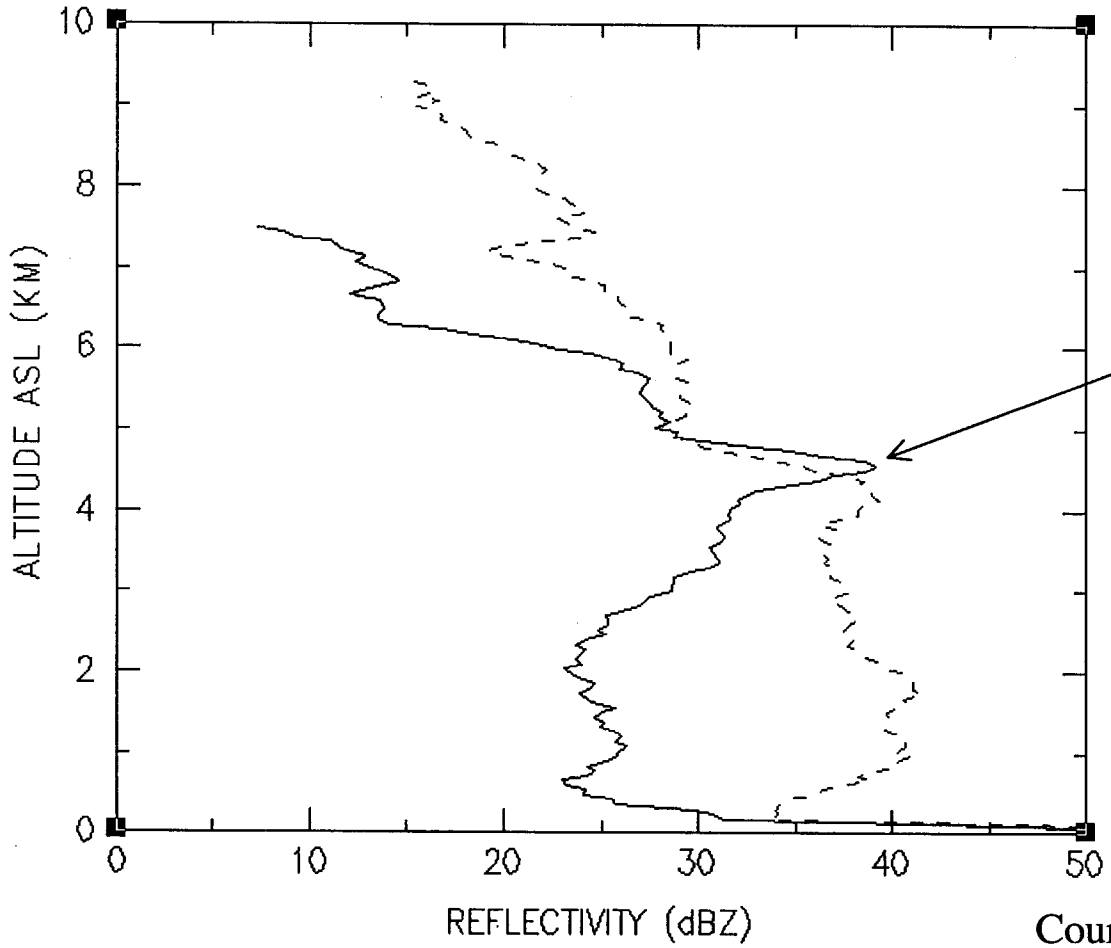

Bright band in stratiform profile

Courtesy JPL/Caltech

BRIGHT BAND AT HH-VV, 30 DEGREE INCIDENCE

ARMAR TOGA COARE, 19 JAN 06:21:17

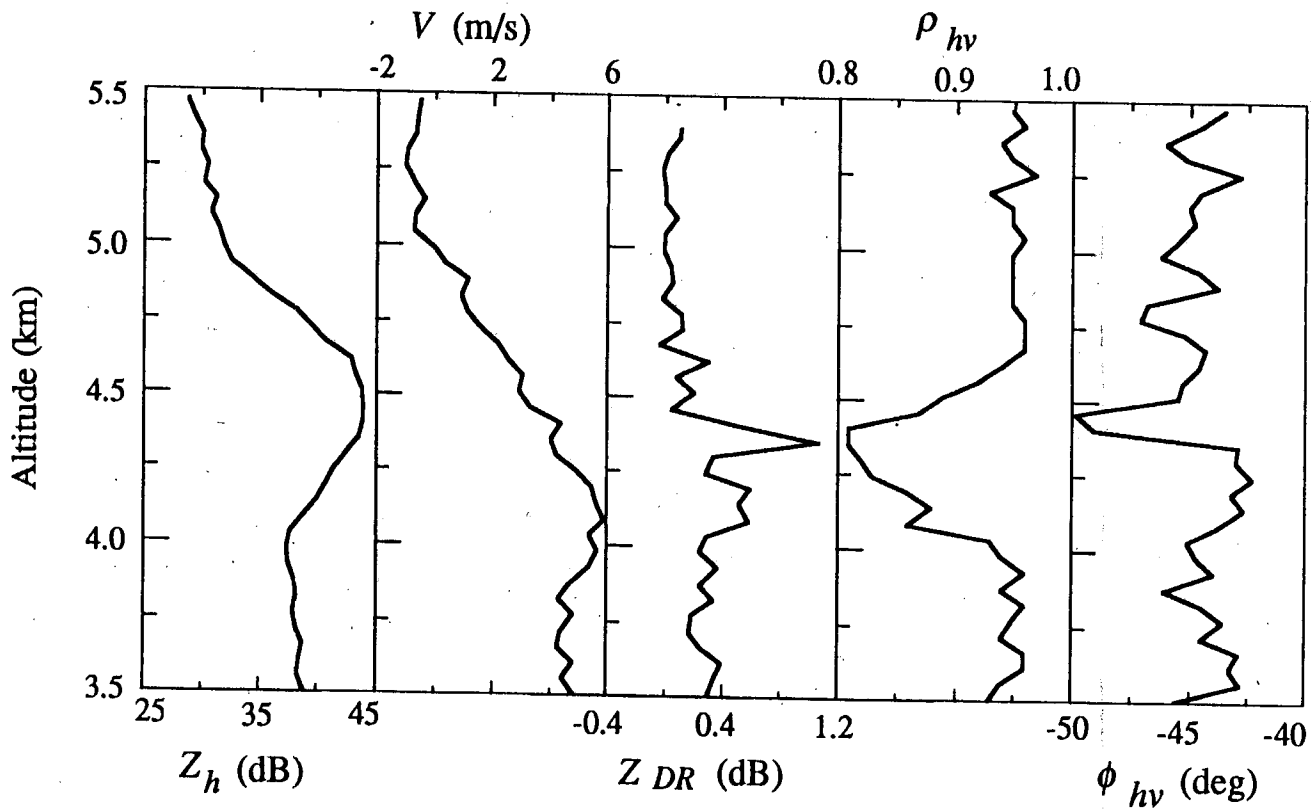

Courtesy
JPL / Caltech.

AIRBORNE RAIN MAPPING RADAR

PULSE COMPRESSION SIDELOBES

- Shown below are averages of approximately 6000 compressed chirps from the ocean at nadir for different chirp lengths.

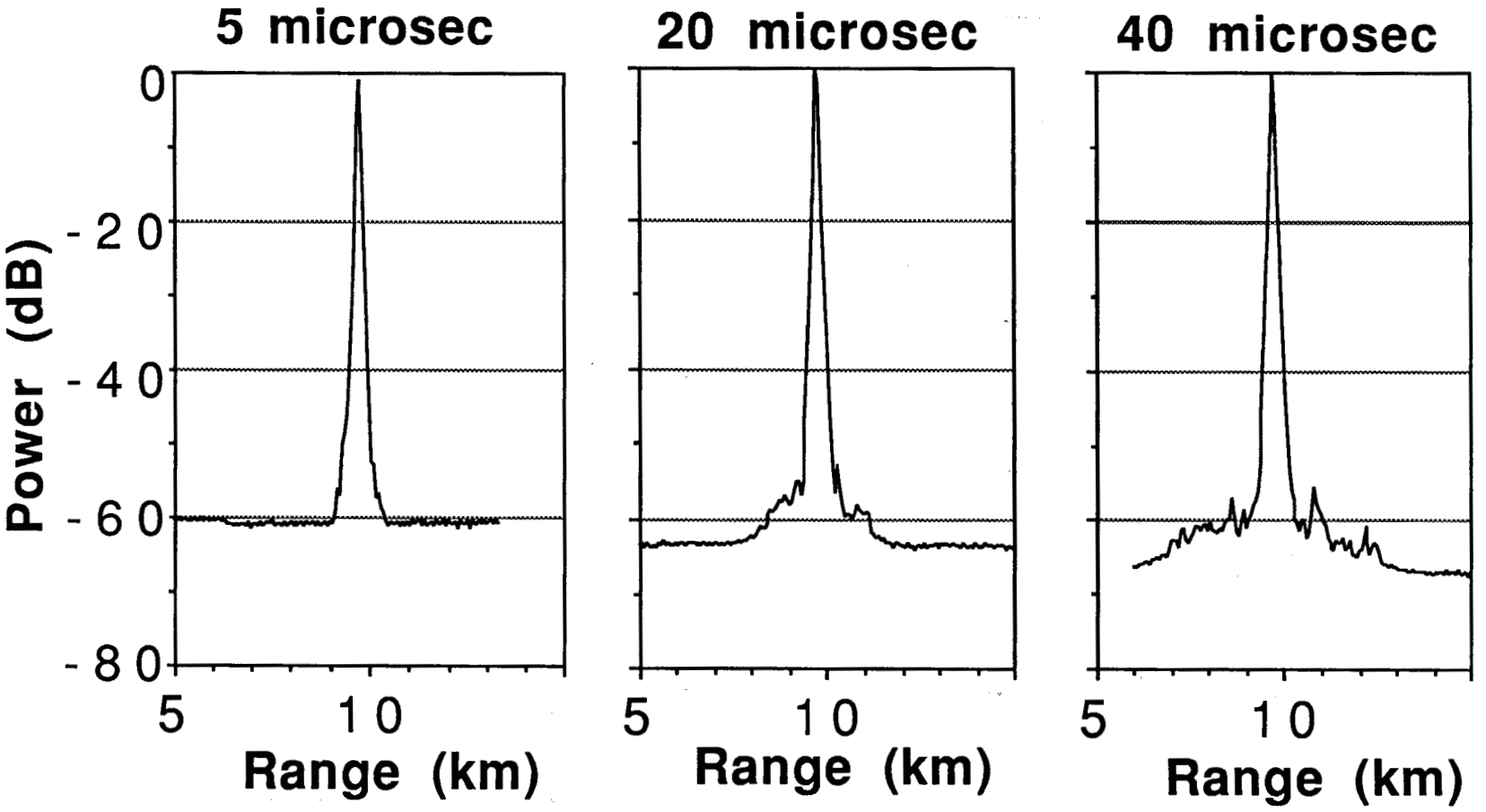

Courtesy JPL/Caltech

AIRBORNE RAIN MAPPING RADAR

ANTENNA PATTERN

- Antenna was rapidly scanned during flight over 14 GHz transmitter on ground.
- By examining signal strength versus scan angle, measured antenna pattern.

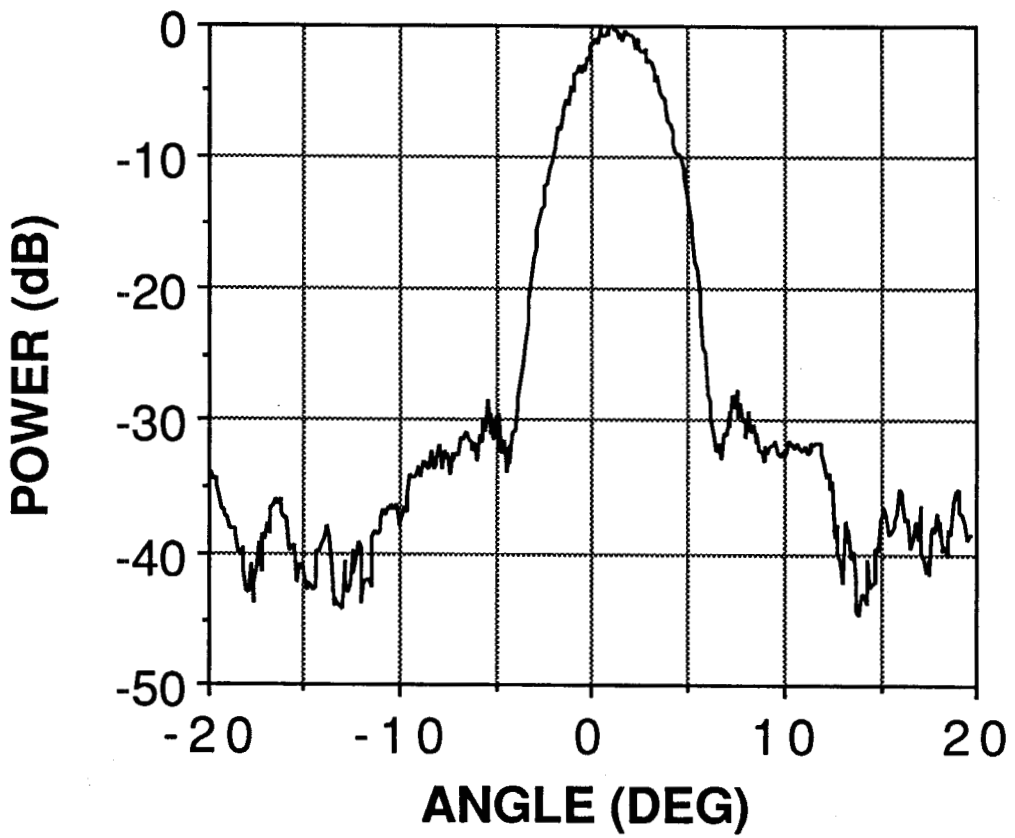

Courtesy
JPL / Caltech

ARMAR TOGA/COARE

SIGNAL-TO-NOISE RATIO

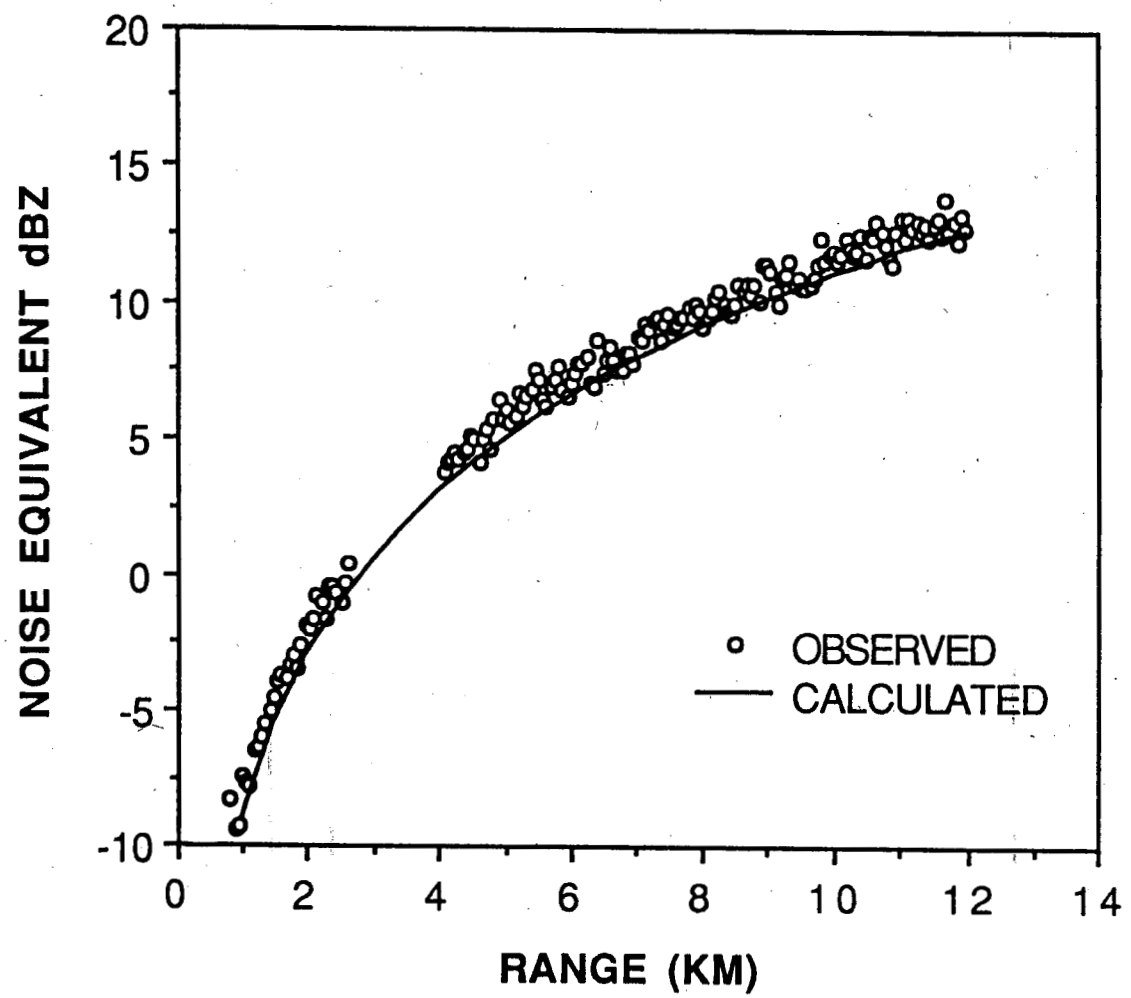

Courtesy JPL/Caltech

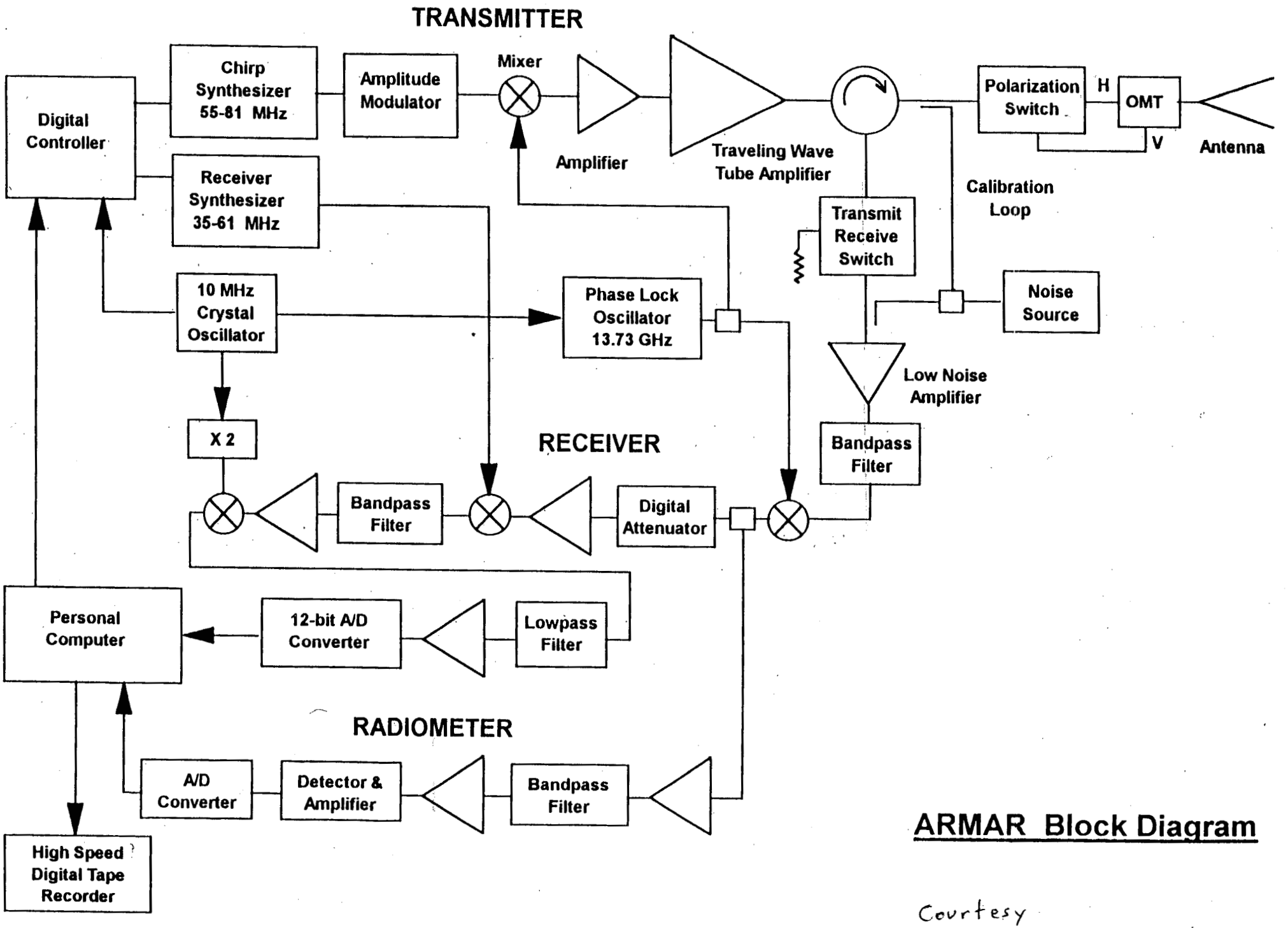

ARMAR Block Diagram

Courtesy
JPL / Caltech

Spaceborne Scatterometers

- Uses sea surface backscatter to estimate wind vector field

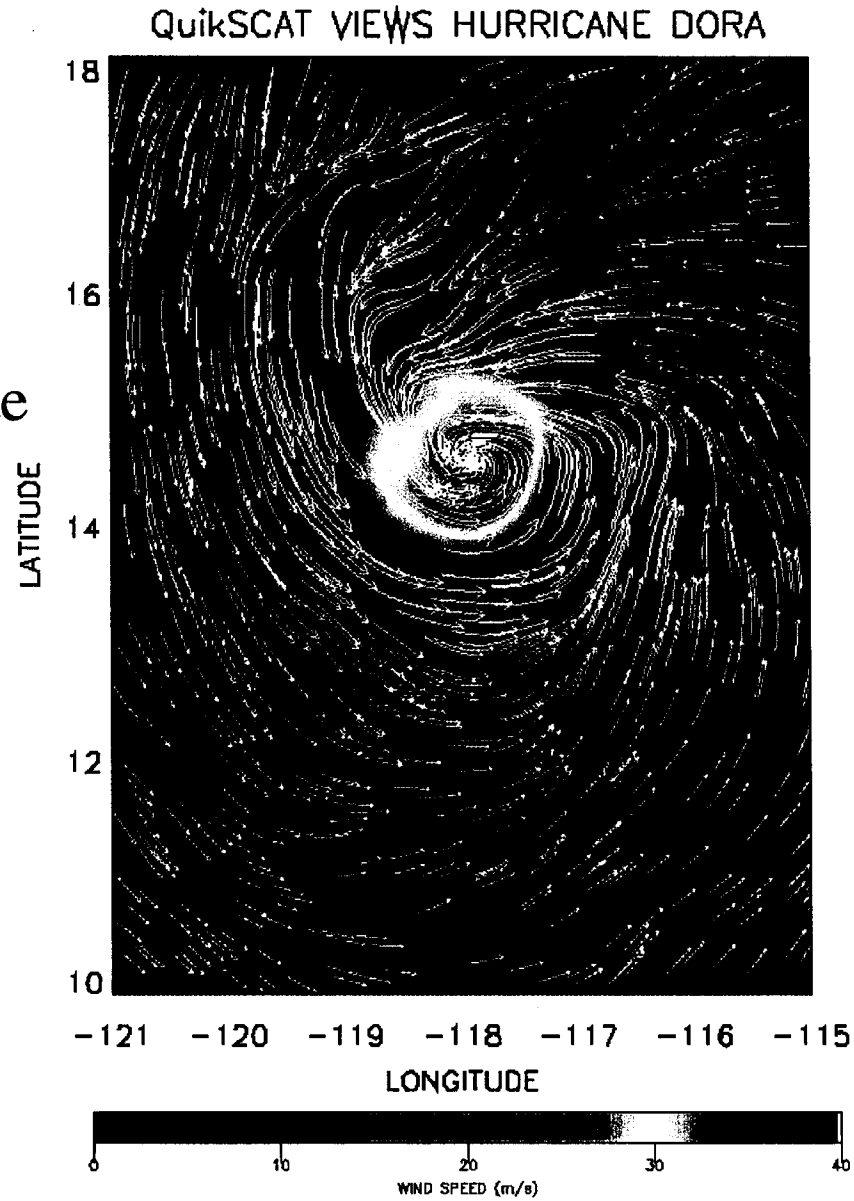

JPL / NASA

L. Jones, UCF / M. H. Freilich, OSU

Microwave Limb Sounder

- Flew on Upper Atmosphere Research Satellite (UARS)
- New version will fly on EOS Aura (~ 2003)
- Uses radiometry to map stratospheric ozone and other chemicals
- UARS MLS had channels up to 205 GHz
- Aura MLS has channels at 640 GHz and 2.5 THz

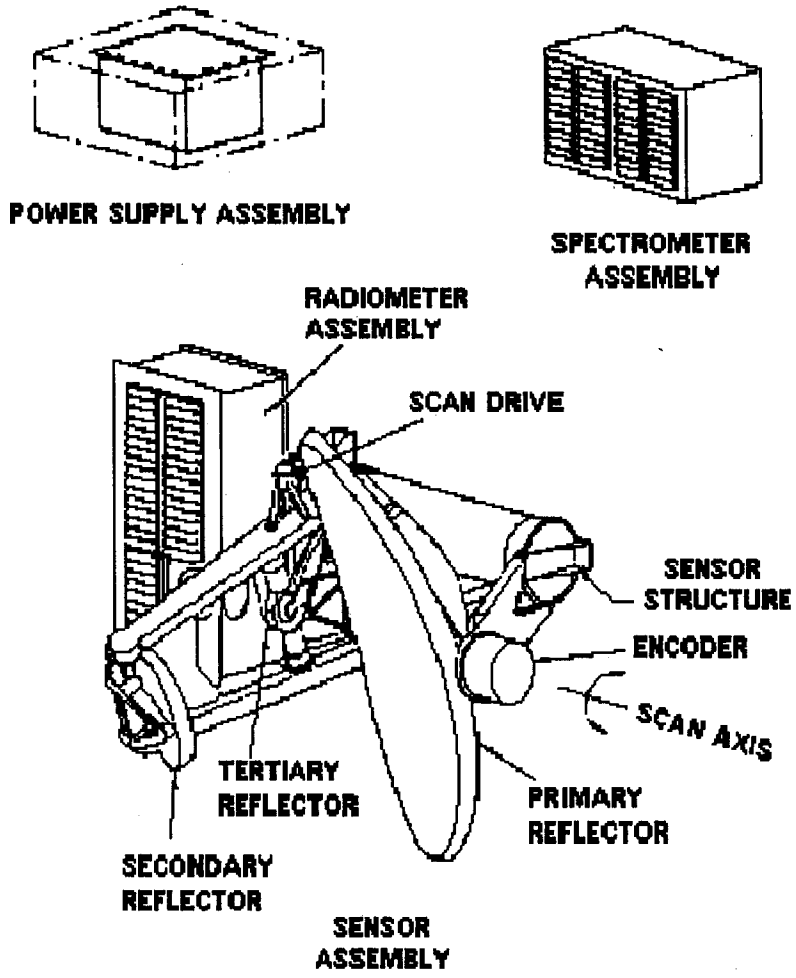

Courtesy JPL/Caltech

CloudSat

- Clouds may have a larger impact on the earth's radiative energy balance than greenhouse gases
- Current spaceborne sensors generally see only the tops of clouds
- CloudSat will carry a nadir-looking 94-GHz radar for observing cloud vertical structure
- The CloudSat radar is expected to acquire global data similar to that shown below from an airborne system (JPL/Umass Airborne Cloud Radar)

Altitude

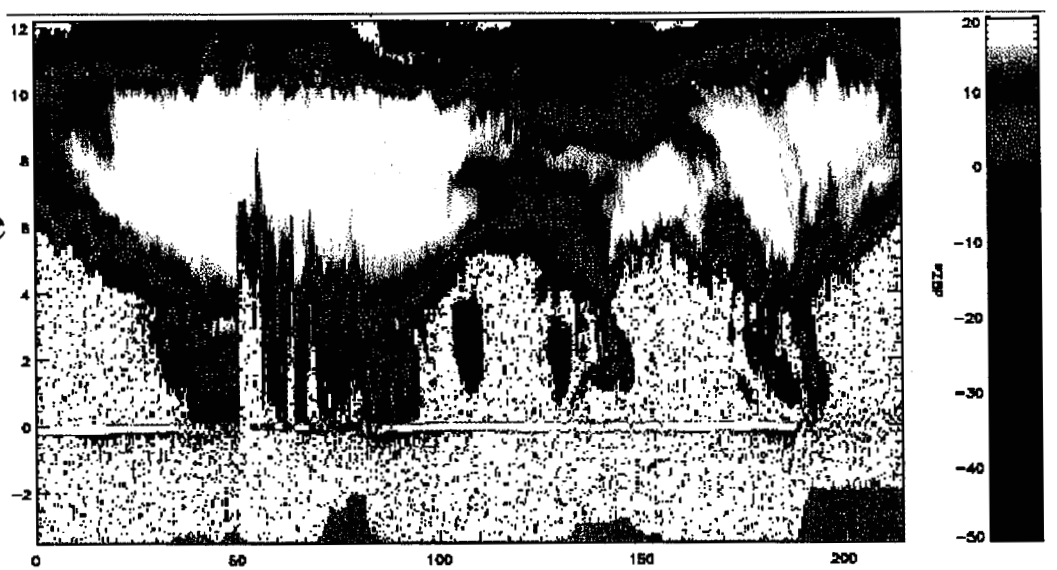

Horizontal Distance

Courtesy JPL/Caltech

CPR System Design and Operation

- CPR system characteristics:
  - Extended Interaction Klystron Amplifier for high radiated power (>1.5 kW)
  - Offset antenna with high gain (> 62 dBi) and low sidelobes (< -50 dB)
  - digital subsystem implemented with FPGAs (no flight software)
- CPR data collection strategy
  - PRF set from lookup table in spacecraft based on altitude
  - data processor averages received echoes over 0.16 s blocks (approx. 650 pulses)
- 5 ms "dead" period at block start is used for calibration measurements; the measurement alternates between one of three possibilities:
  - noise diode ON and coupled to receiver (gain calibration)
  - resistive load coupled to receiver with noise diode OFF (calibration noise floor)
  - antenna noise into receiver (no noise diode or resistive load, data noise floor)
- Noise floor will also be obtained from start of data window, where no clouds are present.
- Transmit power is monitored by sampling a small portion from antenna

Effect of Along-track Averaging

- Instantaneous resolution is 1.4 km (6 dB width)
- 0.16 s averaging broadens this to 1.8 km
- 0.48 s averaging broadens this to 3.8 km

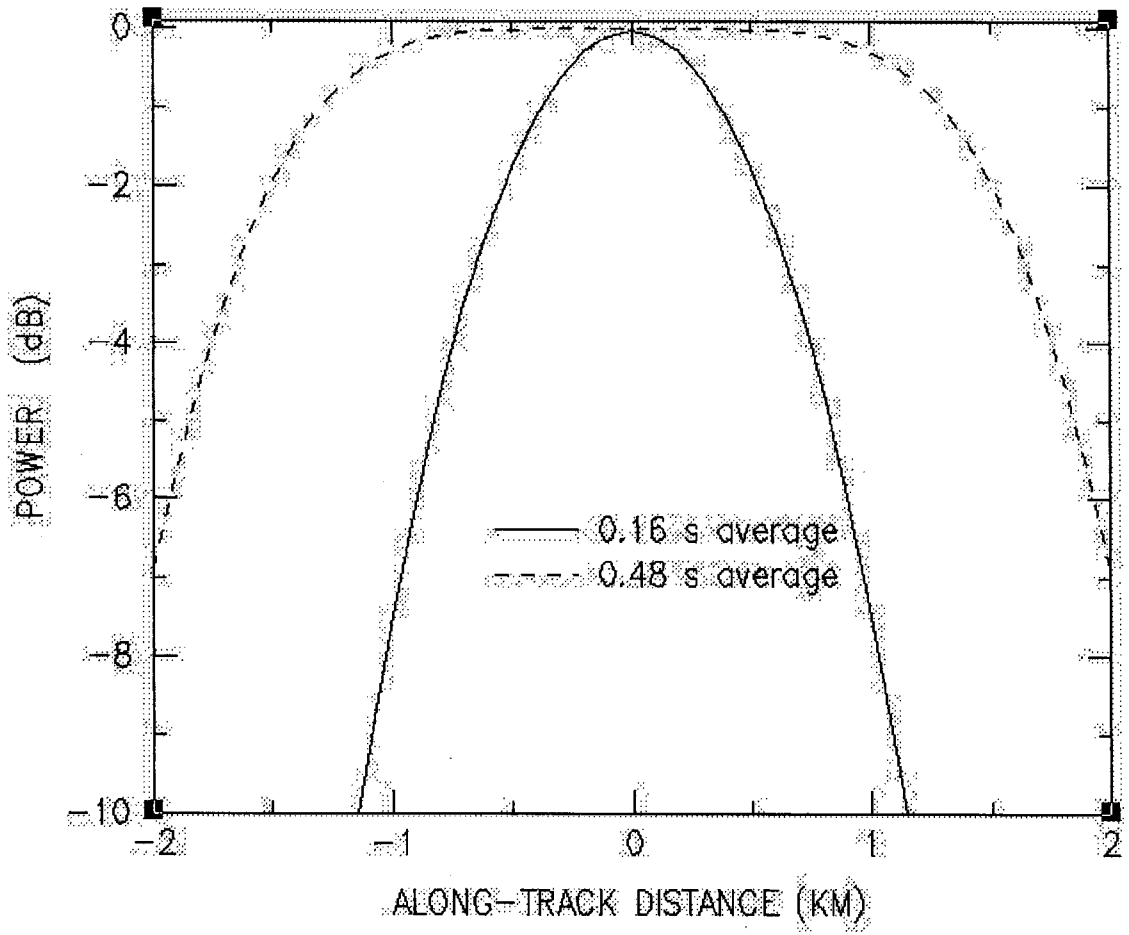

Courtesy JPL / Caltech

RADAR POINTING CONSIDERATIONS

- NADIR ANTENNA SIDELOBE RETURN CAN OCCUR AT SAME RANGE AS CLOUD RETURN FOR OFF-NADIR POINTING
- PLOT SHOWS MAXIMUM ALTITUDE CONTAMINATED BY SIDELOBES
- FOR CLOUD DETECTION DOWN TO 250 M, REQUIRE BEAM WITHIN 2 DEGREES OF NADIR
- FOR SMALL DOPPLER SHIFT, REQUIRE < 0.5 DEGREES FROM NADIR (FORWARD OR AFT)
- POINTING KNOWLEDGE TO 0.1 DEG IS SUFFICIENT

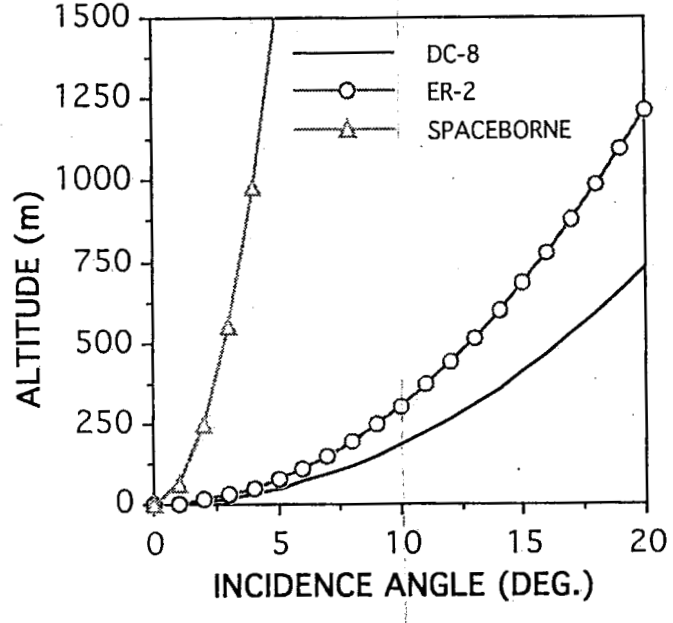

Courtesy
JPL / Caltech

CPR Estimated Sensitivity

- Required sensitivity is -26 dBZ at end of life.
- Table below shows primary contributors to sensitivity and the resulting sensitivity estimates.

Parameter	Performance
Frequency (GHz)	94.05
Range resolution (m)	500
Pulse width (us)	3.3
Peak Power (W, EOL)	1600
Integration Time (s)	0.48
PRF (Hz)	4000
Antenna gain (dBi)	63
Droop loss (dB)	0.3
Receiver NF (dB)	5.7
Tx path loss (dB)	0.3
Rx path loss (dB)	0.3
Noise BW (MHz)	0.35
Altitude (km)	730
Sensitivity (dBZ, EOL)	-27.5

- Requirement is met
- Worst case clutter level is -35 dBZ, well below thermal noise

Courtesy JPL/Caltech