DYNAMIC COST RISK ESTIMATION AND BUDGET MISSPECIFICATION

D. Ebbeler, G. Fox and H. Habib-agahi
Jet Propulsion Laboratory, California Institute of Technology
Pasadena, California

ABSTRACT

Cost risk for new technology development is estimated by explicit stochastic processes. Monte Carlo simulation is used to propagate technology development activity budget changes during the technology development cycle. A key assumption in these models is that, for each activity in the technology development, its initial budget is a central measure of its potential cost. If an initial activity budget deviates from this central measure property, the initial activity budget is said to be misspecified. We incorporate the impact of such a misspecification by specifying a simple functional form that describes how the activity budget commitment evolves during the technology development. A technology development case study illustrates the impact of both initial budget misspecification and schedule slip on the total technology development cost risk estimate.

INTRODUCTION

NASA new technology development encompasses two classes of projects, which have some similarities but operate under differing constraints.

The first class of new technology development exists as funded science projects that have the potential for impacting the definition and selection of future NASA missions if technical performance parameters can be elevated sufficiently by the development. In this class it is typical that technical performance goals are set rather than requirements. The initial budget and schedule over the funding period are intended to facilitate reasonable progress toward the goal. But there are neither roadmapped mission constraints nor specific mission requirements to be met. So the interpretation of cost growth risk is simply that, based on the initial budget and schedule for the funding period, the existence of systemic cost uncertainty and external cost shocks as the new technology development evolves implies either a slowdown in progress toward the technical performance goals or increased cost pressure in order to maintain a satisfactory rate of progress. Either consequence can impact the sustainability of the new technology development.

The second class of new technology development consists of those focused new technology developments tied to specific roadmapped NASA missions, where technical performance requirements, mission schedule constraints and potential initial budget misspecification are integral to the prediction of cost growth risk. Both cost growth risk and the risk of new technology development schedule slip can impact the sustainability of members of this class of new technology development. Cost growth risk derives from systemic cost uncertainty and external cost shocks. For this class of new technology development, a useful definition of a correctly specified initial budget for a new technology development activity is that, conditional on the state of knowledge, including nominal schedule and performance requirements, it is equally likely that potential technology development activity costs lie above or below the initial budget for the activity. For this class of new technology development, cost pressure derived from systemic cost uncertainty is increased by negatively biased initial budget estimates for new technology development activities. New technology development schedule slip can have a direct impact on sustainability due to mission schedule constraints. It can also have an indirect impact on sustainability due to amplifying the cost pressure on the new technology development.

In this paper we will present a model for predicting cost growth risk applicable to both classes of new technology development. For the second class of new technology development the impact on cost pressure of both initial budget misspecification and schedule slip must be considered. Model development will be presented for the second class of new technology development. For the first class of new technology development, cost growth risk can be predicted using that model, with no cost pressure increments attributable to initial budget misspecification or schedule slip.

SOURCES OF COST UNCERTAINTY

Systemic cost uncertainty is the uncertainty in the cost of new technology development that derives from the behavior of developers in response to technology development activity risks, conditional on fixed

schedule and performance requirements. The NASA technology development environment is equivalent to the economic organizational structure called "principal-agent". The characterization of this structure evolved from both theoretical and empirical studies that began over 60 years ago in an attempt to understand and explain seemingly paradoxical economic behavior. The widely accepted innovation that provides a consistent framework for explaining what is observed under alternative organizational environments includes the appreciation that information is not costless. In the principal-agent paradigm the principal (sponsor) funds an undertaking (technology development) and the agent (developer) manages and performs the work. The developer does not report incremental activity budget deviations to the sponsor. Due to the imbalance in information and expensive information acquisition costs for the sponsor, rational behavior by the developer is equivalent to treating the initial budget for a technology development activity as a floor with respect to expenditures for that activity. That is reflected in the real-world behavior of developers. Once initial budgets are specified for all of the technology development activities, they become planning budgets for the developer. Since the planning budgets are commitments, they are lower bounds on technology development activity costs. This implies the discomforting result that the organizational structure can be a major contributor to cost risk, as compared with the benchmarked result when costless perfect information is assumed. Reductions in technology development cost risk are achievable by altering the organizational structure to include developer incentives that result in activity cost savings.

External shocks that can impact cost growth in new technology development are events outside the control of the developer. Examples are a deviation from the inflation rate used to set initial activity budgets and schedule or performance requirement changes derived from changes in the missions supported by the new technology.

A DYNAMIC COST RISK MODEL

Our approach to modeling cost risk in new technology development is to begin with the functional decomposition of the technology development into the activities used in the construction of the initial budget. An associated cost probability distribution is generated for each activity in that decomposition. Technology development cost risk is characterized by the technology development cost probability distribution formed by combining cost probability distributions for individual activities.

The knowledge and experience of technology developers is used to ascertain the technology development activities for which cost volatility needs to be considered and those that can be approximated as fixed. For each of those activities that contribute to cost risk, we will construct a model of systemic risk constrained by the NASA principal-agent management structure, contingent on a correctly specified initial budget. That model will then be modified by incorporating the impact of initial budget misspecification at the activity budget level. The impact of external shocks, as they affect systemic risk, can be investigated parametrically.

For each technology development activity cost risk element, for a fixed schedule and performance requirements, systemic cost uncertainty is the consequence of a sequence of random events whose cost impacts can be described by a time dependent stochastic (Wiener) process; that is, incremental departures from a correctly specified initial activity budget are normally distributed. Under the NASA principal-agent management structure, the rational behavior of technology developers reacting to such events implies that systemic costs will never fall below the initial activity budget. The Wiener model with this constraint produces a systemic cost evolution equivalent to a random walk with a boundary constraint. It can be described by the stochastic difference equation

$dC(t) = a \cdot C(t)dt + s \cdot C(t)dw$ with constraint
$dC(t) \geq a \cdot C(t)dt$ for $t \in [0,T]$

Choice of the units for t is application dependent. Assuming t is measured in years,

$C(t)$ = predicted cost at time t in year t dollars
$C(0)$ = initial activity budget estimate in base year dollars
a = inflation rate (%/year)
s = volatility parameter (%/year)
T = technology development activity duration (years)
dw = a random variable distributed N(0,dt), i.e. dw is normally distributed with mean zero and variance dt

In order to determine the volatility parameter for the Wiener process corresponding to a technology development activity cost evolution, it is mathematically sufficient to elicit an estimate of any percentile of the potential cost overrun for that technology development activity.

For each technology development activity with volatile cost, it is proposed that an estimate of the 99th percentile cost overrun for that element, conditional on a schedule and nominal budget, be elicited. The estimates are elicited from cognizant individuals for each such technology development activity. The 99th percentile means that the cognizant individuals judge, given a schedule and nominal budget that do not change, that there is only a 1% chance of exceeding the elicited value. Elicitation is preferred because our focus is on capturing past experience together with knowledge about the specific technology development and exogenous conditions that may make the anticipated bounds differ from the past. 1% was selected because it is sufficiently large that the corresponding cost overrun is still of plausible likelihood of occurrence. The Wiener process volatility parameters are determined empirically by calibrating the Monte Carlo simulations so that each simulated cost 99% value is approximated by the corresponding elicited 99% value.

INCORPORATING THE IMPACT OF BUDGET MISSPECIFICATION ON COST RISK

The Wiener modeling structure will be modified to account for the impact on cost risk of technology development initial activity budget misspecification. A correctly specified technology development initial activity budget will be designated by B. The corresponding misspecified technology development initial activity budget at the start of development will be designated by B_0^*. B_0^* is also the activity budget commitment at the start of development. As the technology development activity evolves, the developer experiences an imbalance of technology development activity cost impacts, which generates a sequence of revised perceptions of the activity budget commitment, $\{B_1^*, B_2^*, B_3^*. \ldots\ldots\}$. It is the behavioral interaction of those revised perceptions with the principal-agent management structure that affects cost risk for the technology development. Under that structure the systemic cost for the activity will never fall under the perceived activity budget commitment. The systemic cost evolution for a technology development activity is still equivalent to a random walk with a boundary constraint.

$dC(t) = a \cdot C(t)dt + s \cdot C(t)dw$ with constraint
$dC(t) \geq a \cdot C(t)dt + B^*(t) - B$ for $t \in [0,T]$

Choice of the units for t is application dependent. Assuming t is measured in years,

C(t) = predicted cost at time t in year t dollars
C(0) = B = correctly specified initial activity budget in base year dollars
B*(t) = perception at time t of the activity budget commitment
a = inflation rate (%/year)
s = volatility parameter (%/year)
T = technology development activity duration (years)
dw = a random variable distributed N(0,dt), i.e. dw is normally distributed with mean zero and variance dt

The description of how the developer revises his perception over time of the required activity budget commitment is given by

$$B_{i+1}^* = (1 - \lambda_i) \cdot B_i^* + \lambda_i \cdot C_i$$
$$\lambda_i = 1 - (1 - \lambda_0)^i$$

with λ_T specified near 1. The index "i" designates time period i, with $B_0^* = B^*(0)$.

INCORPORATING THE IMPACT OF SCHEDULE SLIP ON COST RISK

For any new technology development, a nominal schedule consists of a network of scheduled activity durations with precedence constraints. A simple model that embeds the amplification of cost pressure due to schedule slip is to assume level-loaded effort for the duration of each activity. For a given activity, under level-loading, an activity cost generated using the stochastic cost model translates into an equivalent schedule slip for that activity. Schedule slips are generated for each activity, taking into account precedence constraints. Total new technology development cost growth risk is characterized by the technology development cost probability distribution formed by combining cost probability distributions for individual activities as they are generated using this characterization of the impact of schedule slip on cost pressure as well as the impact on cost pressure

ILLUSTRATION FOR A FOCUSED NEW TECHNOLOGY DEVELOPMENT

A current focused new technology development that will support a roadmapped mission is used to illustrate our methodology. Table 1 provides a list of development activities with initial budgets and estimated 99th percentile cost overruns. Figure 1 represents the project schedule with precedence constraints.

WBS Element	Description	Annual Budget Estimates (Y1$K)			Budget Estimate (Y1$K)	Elicited 99% Cost (Y1$K)		
		Year 1	Year 2	Year 3		Year 1	Year 2	Year 3
1.0	System Engineering (SE)	$72.1	$267.1	$221.7	$560.9	$82.9	$333.9	$288.2
2.0	Communications Assembly Development (COMM)	$407.2	$864.7		$1,271.9	$549.7	$1,210.6	
3.0	Antenna Componet Development (ANT)	$131.2	$201.2		$332.4	$157.4	$241.4	
4.0	Data System Development (DATA)	$190.1	$198.3		$388.4	$247.1	$277.6	
5.0	System Integration (SI)	$88.0	$284.0	$740.2	$1,112.2	$96.8	$369.2	$1,036.3
6.0	Algorithm Development (ALG)	$81.2	$157.1	$110.9	$349.2	$89.3	$188.5	$144.2
	Totals	$969.8	$1,972.4	$1,072.8	$4,015.0			

Table 1 New Technology Development Activity Data

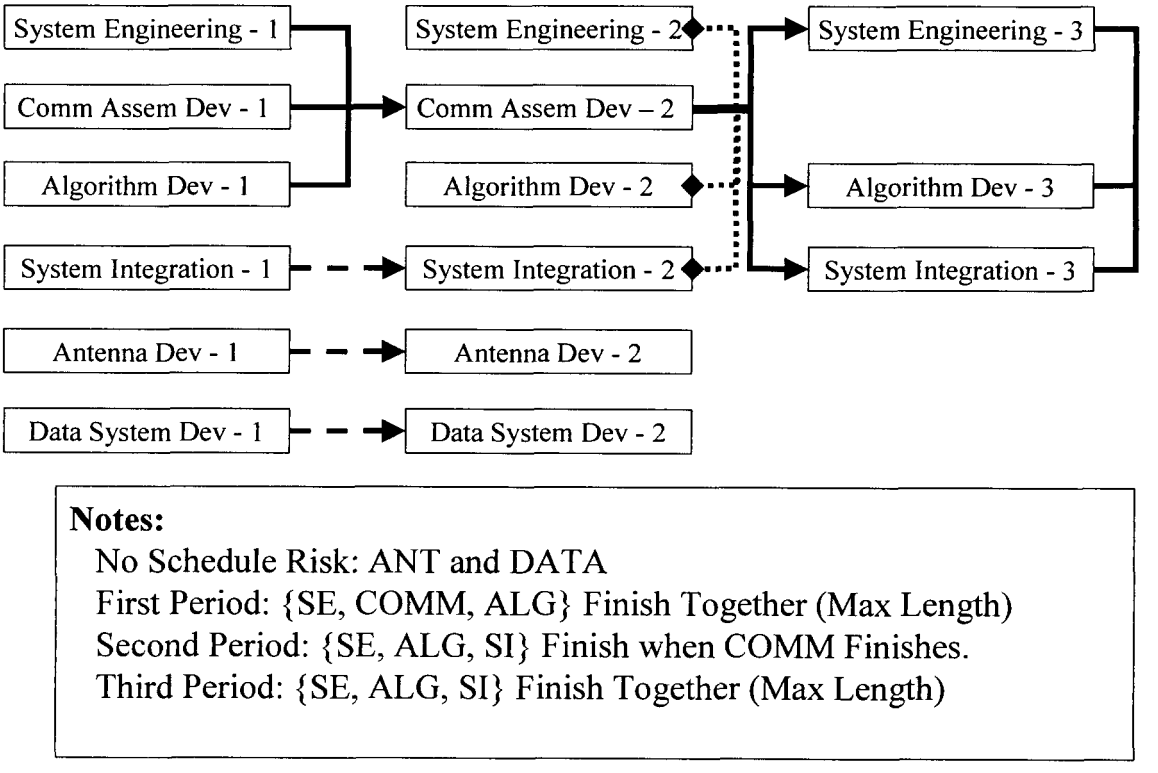

Figure 1 New Technology Development Schedule Precedence

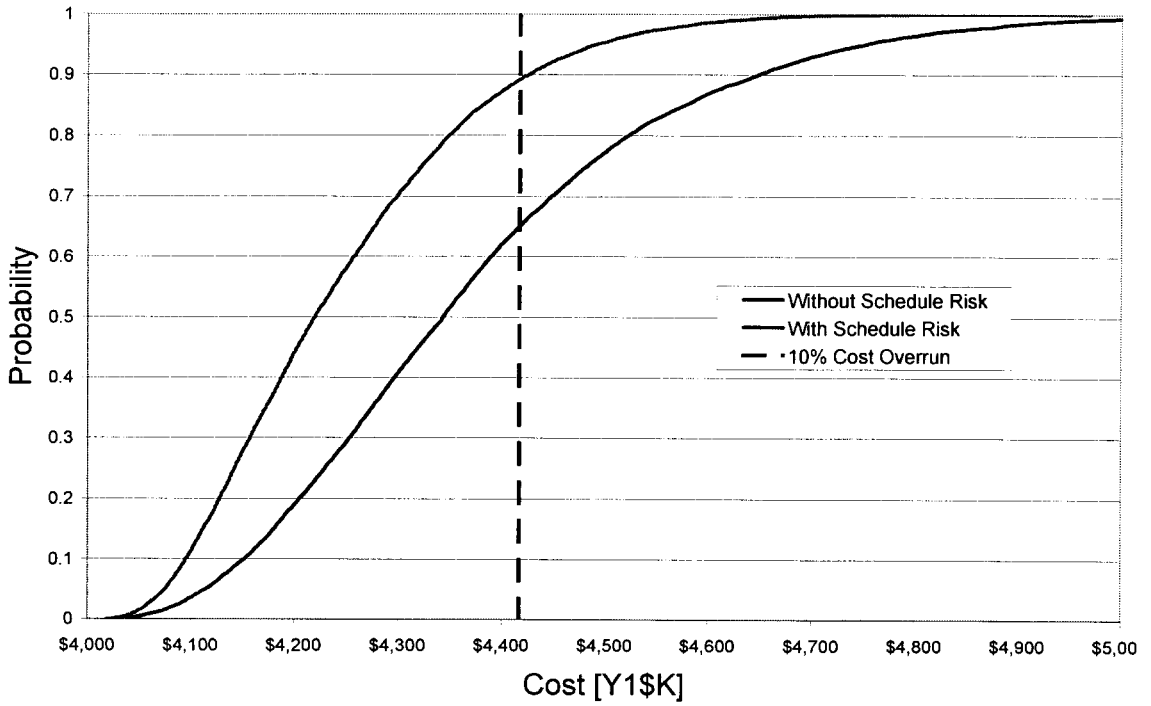

Figure 2 Effect of Schedule Slip on New Technology Cost Growth Risk

Figure 2 shows the cost growth risk, assuming a correctly specified initial budget, including and excluding the impact on cost pressure of schedule risk. For example, when schedule risk is included, the probability of a cost overrun greater than 10% of the initial budget increases by a factor of 3.

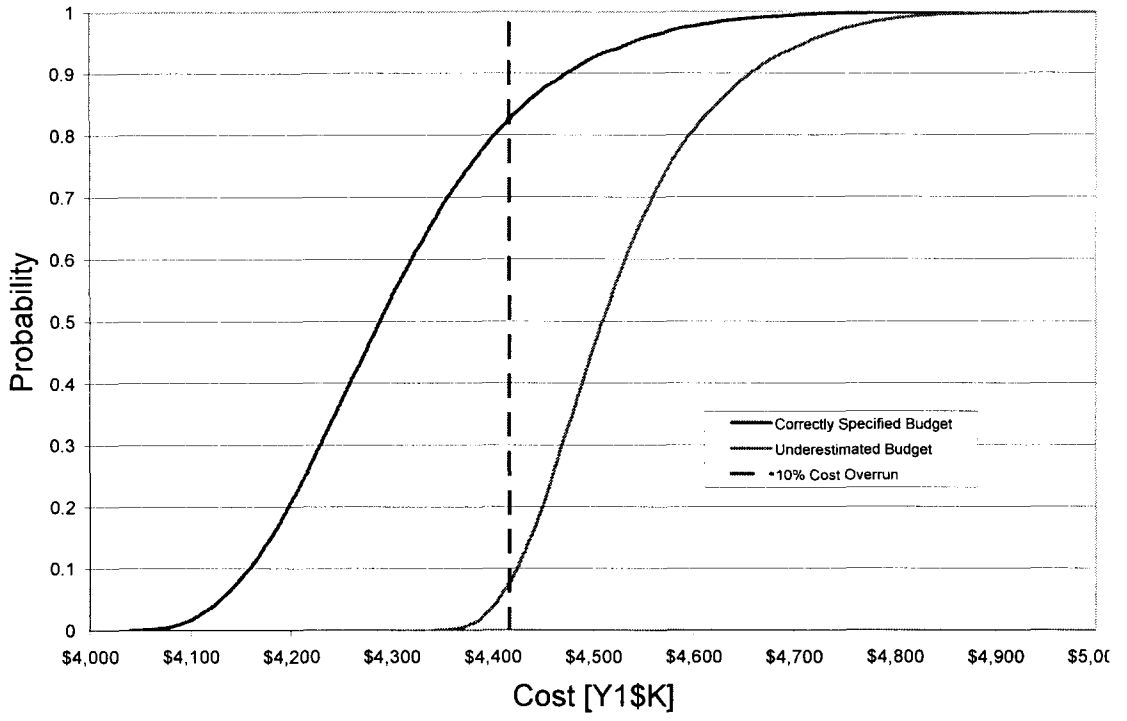

Figure 3 Effect of Underestimated Budget on New Technology Cost Growth Risk

In Figure 3 the impact on cost pressure of underestimating the initial budget is included. For example, if a correctly specified initial budget for WBS 2.0 "Communications Assembly Development" is 25% larger than estimated, then the probability of a total cost overrun greater than 10% of the initial budget increases by a factor of 5.

CONCLUSIONS

In order to correctly model new technology development cost growth risk it is necessary to draw a clear distinction between the static risk of misspecifying the initial budget for a new technology development and the dynamic cost growth risk as the technology development evolves. Dynamic cost growth risk is a property of the true cost estimation for the evolving technology development. Estimation of the initial budget, although often referred to as "cost estimation", can, at best, reveal the static risk of initial budget misspecification. Only in the rare case where the project budget is itself static is initial budget estimation equivalent to true cost estimation. In our model, the impacts of initial budget misspecification as well as schedule slips on dynamic cost growth risk are included and an example illustrates that their impact on new technology development cost pressure can be significant.

ACKNOWLEDGMENT

The research described in this publication was carried out at the Jet Propulsion Laboratory, California Institute of Technology, under a contract with the National Aeronautics and Space Administration Cost Analysis Division.