Microwave Observatory of Subcanopy and Subsurface (MOSS): A Low-frequency Radar for Global Deep Soil Moisture Measurements

M, Moghaddam*[,1], E. Rodriguez[1], Y. Rahmat-Samii[2], D. Moller[1], J. Hoffman[1], J. Huang[1], S. Saatchi[1]

[1]Jet Propulsion Laboratory, California Institute of Technology, 4800 Oak Grove Drive
Pasadena, CA 91109, USA
Tel: (+1) 818-354-1591, FAX: (+1) 393-5184, email: mahta.moghaddam@jpl.nasa.gov

[2]Department of Electrical Engineering, University of California, Los Angeles
email: rahmat@ee.ucla.edu

Abstract – **Measurements of deep and subcanopy soil moisture are critical in understanding the global water and energy cycle, as well as the interactions of the carbon and water cycles, but are presently not available on a synoptic basis. In this paper, a low-frequency UHF/VHF radar mission concept is presented and technology challenges to implement it are discussed. This mission concept is currently being studies under a NASA/ESTO instrument incubator program (IIP) project. The progress of several aspects of the project are discussed.**

I. INTRODUCTION

Microwave Observatory of Subcanopy and Subsurface (MOSS) is a synthetic-aperture radar (SAR) Earth-orbiting system under conceptual development as part of the NASA Earth Science Technology Office Instrument Incubator Program (IIP) for global observations of soil moisture under substantial vegetation canopies and at depths of down to several meters. It consists of a SAR operating simultaneously at two low frequencies, one in the UHF and the other in the VHF range. There are several challenges for implementing such a system, which are being studied and mitigation strategies being developed. These include the design of a large aperture antenna and prototyping of its feed system, development of a prototype science data set, development of soil moisture estimation algorithms, frequency interference analyses, correction of ionospheric effects, and evaluation of the impacts of MOSS products on global water and energy balance and Carbon cycle studies.

The required repeat observation period of 7-10 days imposes a requirement on the instrument's swath width and hence the antenna size. Specifically, both frequencies require an antenna length of at least 30m, while each requires a different antenna width (wider at VHF, proportional to wavelength). Using conventional phased array technologies, the two antennas, even with a shared-aperture architecture, would have a mass in excess of 4000 kg, rendering the mission unfeasible. The concept proposed by MOSS is to synthesize the two different antenna widths on a single parabolic mesh reflector of 30-m diameter by subilluminating the reflector surface with a dual-frequency stacked patch microstrip array feed. The resulting total antenna system mass is one order of magnitude lower than the conventional approach while carrying significantly lower risk than other antenna concepts such as inflatables. MOSS is prototyping this antenna feed system to show the feasibility of the overall concept.

A tower-mounted mobile radar system has been developed to produce several prototype science data sets for MOSS. The tower radar operates at the same UHF and VHF bands as MOSS, with the addition of an L-band capability to simulate other possible future L-band radars in space. During the next two years, this radar will be operated at several diverse locations that encompass arid/semiarid, temperate, and boreal climates with various soil types and vegetation covers. The soil moisture products derived from this system will be used to show the anticipated range and quality of MOSS products and their utility in global climate studies. Water and energy balance, as well as Carbon cycle, modeling is an integral part of this project and is being carried out to assess the impact of prospective MOSS data products. Other important aspects of this project are the correction for ionospheric effects (manifested in signal attenuation, polarization rotation, and reduction of coherence within the synthetic aperture) and analysis of frequency interference from and to other systems operating in the same frequencies.

II. SAR SYSTEM DESIGN

A preliminary design for a radar system capable of simultaneously meeting all of the measurement requirements mentioned above has been completed [1]. The system parameters are summarized in Table 1. The pulse repetition frequency (PRF) was maximized to lower the azimuth ambiguities to a reasonable level but is still low enough to achieve a swathwidth that fulfills the revisit time requirements. A long (140us) pulselength is used for both systems enabling a relatively low transmit power of 2kW. To assess the performance of the proposed system, an echo simulator was written that incorporates a Bragg rough-surface soil backscattering model. Also incorporated are modeled E-

and H-plane antenna patterns at both frequencies that take into account the effects of blockage and enable us to calculate the azimuth and range ambiguities.

Table 1. Summary of SAR system design parameters

Parameter	UHF	VHF
Altitude	1313 km	1313 km
Swath Width	346 km	346 km
Antenna Width	2.8m	11m
Antenna Length	30m	30m
Center Frequency	435 MHz	137 MHz
Bandwidth	1 MHz	1 MHz
No.Looks/1km (min.)	54	40
Peak Power (1 channel)	2kW	2 kW
Pulse Length	140usec	140usec
Duty Cycle (2 channel)	13%	13%
Avg. Power (2 channel)	255W	255W
PRF (1 channel)	455Hz	455Hz
Processing Bandwidth	137Hz	182Hz
Data Rate (dual channel)	1.7Mbps	1.7Mbps
Incidence Angle Range	16-32	16-32
Azimuth Ambiguities	-18dB	-20dB

Figure 1 shows some results from these simulations for P-band (UHF). In this figure the upper panel shows the predicted H-polarized performance and the lower panel shows the predicted V-polarized performance. Note that in these figures the green line is simply a reference that indicates the timing of the transmit pulses relative to the echoes but is not adjusted in any way to match the power levels on the graph. Also, the range-ambiguity levels are not plotted since the relative levels are very low (<-60 dB).

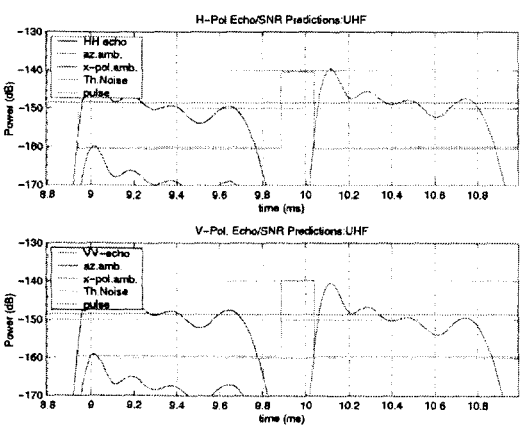

Figure 1. Sample simulations of SAR echoes.

III. ANTENNA DESIGN

The SAR system design for achieving the required wide swath indicated that the antenna length at both frequencies has to be at least 30m, while the width has to be 11m at VHF and 2.8m at UHF. Such an antenna, if implemented with state-of-the-art array technology, would have a mass of about 4000 kg, resulting in an unfeasible mission. Our antenna design synthesizes the same size apertures by subilluminating a 30-m mesh reflector symmetrically fed with a dual-stacked patch array. The resulting mass of the reflector, feed array, and support structures is estimated to be less than 500 kg. Figure 2 shows the array design and calculated radiation patterns, which are incident on the reflector. Figure 3 shows the schematic of the mesh reflector (courtesy TRW-Astro) and the calculated currents on the 30-m reflector, confirming the required aperture synthesis has been achieved. The dual-frequency feed element has been built and tested at the scaled frequencies of L-band and S-band (Figure 4). The array is currently under construction. The overall array and reflector performance will be tested at the scaled frequencies. The dual-frequency element at the actual (UHF/VHF) frequencies has been designed and will be built and tested this year.

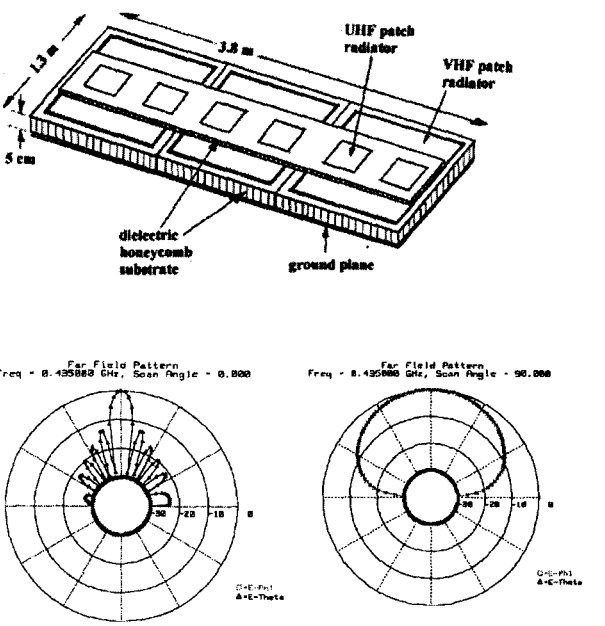

Figure 2. Top: schematic of dual-stacked patch UHF/VHF array. Middle: 6-element UHF array principal plane patterns at H-pol. Bottm: 3-element VHF array principal plane patterns at H-pol.

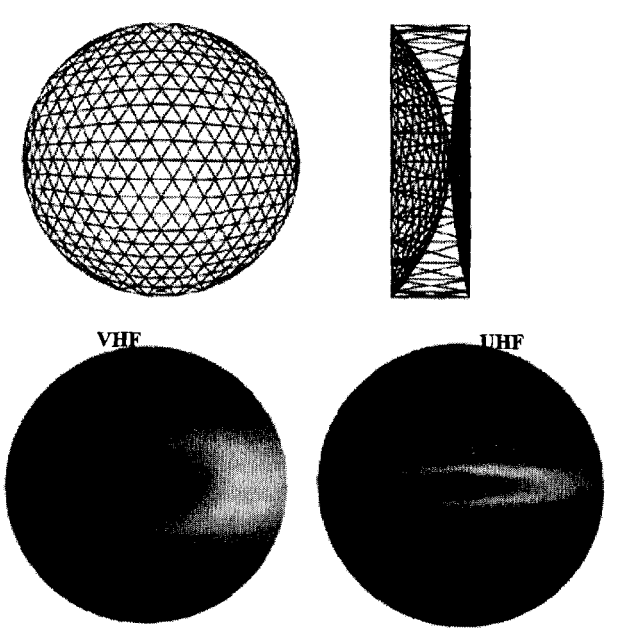

Figure 3. Top: front and side view of the Astro-mesh reflector antenna aperture schematic. Calculated currents on the reflector, synthesized by the dual-frequency feed array in Figure 2.

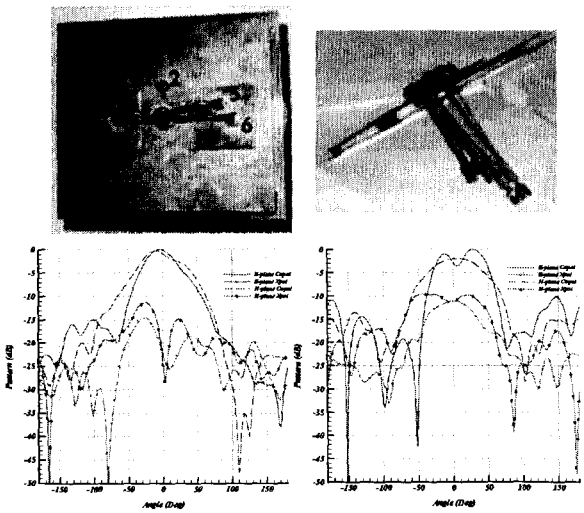

Figure 4. Top: L/S band scaled frequency element of the dual-stacked patch feed array, using a novel co-ax feed method. Bottom: measured radiation patterns at ports 3 and 4.

IV. TOWER RADAR AND FIELD EXPERIMENTS

To demonstrate the deep and subcanopy soil moisture products from the proposed UHF and VHF SAR instrument, we have developed a tower-mounted radar (Figure 5). This radar is a pulsed polarimetric radar, and uses a log-periodic antenna and operates at VHF, UHF, and L-band. Beam focusing is achieved by moving the tower vertically and horizontally to synthesize a large aperture with a focused beam resolution cell of about 10m by 10m on the ground.

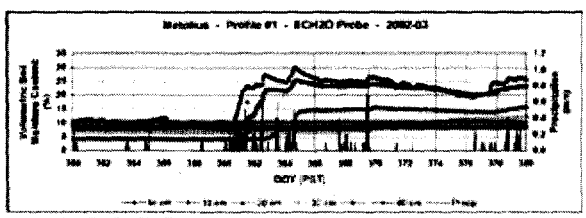

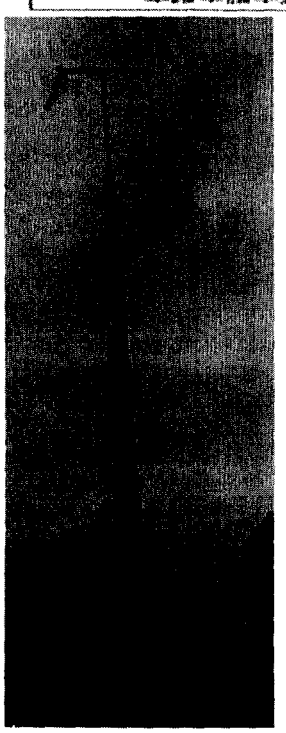

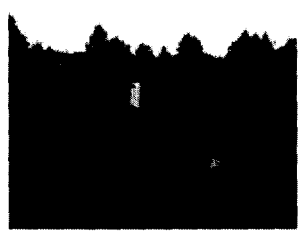

Figure 5. Left: Tower radar testing. At full extension, the tower is about 45m high. The antenna pointing can be adjusted full range as needed. The tower telescopes and can be towed horizontally for aperture synthesis. Top: Sample in-situ soil moisture data from Metolius, Oregon (above), to be used for validation of products from the tower radar. Probes are installed at various field locations with different vegetation and soil conditions. Soil moisture is measured at several depths, in this case down to a bedrock at 60cm.

The beam-focusing processor architecture is shown in Figure 6, and addresses a number of challenges for the tower radar. These include wide bandwidth focusing, real-time operation and debugging, calibration, and RFI removal.

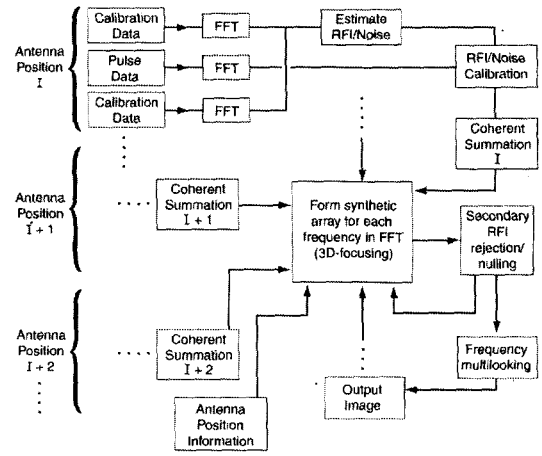

Figure 6. Tower radar processor architecture.

A new generation of soil moisture estimation algorithms is being developed, which will be validated using the tower radar data. Here, the effects of soil penetration are being modeled and integrated into our previously validated forward and inverse scattering models for vegetation and soil characteristics. The soil is being modeled as a multilayered rough surface with various inclusions such as rocks (Figure 7). A numerical scattering solution (FDTD) for this soil model is being embedded in our existing forest scattering model, replacing the simple single-interface rough surface. The inversion algorithm will take advantage of the multiple low frequencies available to calculate soil moisture in two soil column depths. Field experiments are scheduled for this summer and available results will be presented.

V. SUMMARY

The MOSS project is studying various design, technology, and scientific challenges for implementation of a UHF/VHF polarimetric SAR mission for global observations of deep and undercanopy soil moisture. Latest progress on all aspects are given in this presentation. In addition to the topics noted in previous sections of this paper, ionospheric effects and impact on the study of global water and energy cycle will also be discussed.

ACKNOWLEDGEMENTS

This work was performed in part by the Jet Propulsion Laboratory, California Institute of Technology, under contract from the National Aeronautics and Space Administration (NASA).

REFERENCES

[1] Moller, Rodriguez, Moghaddam, and Hoffman, "A Dual-low-frequency Radar for Sub-canopy and Deep Soil-moisture Measurements," Big Sky Conference, March 2003.

[2] Huang, J., Y. Rahmat-Samii, and M. Moghaddam, "A VHF/UHF dual-band dual-polarized microstrip array," presented at *PIERS'2003* (invited).

[3] Keerti S. Kona and Yahya Rahmat-Samii, "Design and Analysis of a Novel Probe-feeding method for Stacked Microstrip Patch Antennas," *IEEE AP-S Int. Symp.*,Columbus, Ohio, June 2003.