Transmit/Receive Modules for Large Aperture Membrane Phase Arrays (T/R Membrane)

Alina Moussessian, Greg Sadowy, Linda Del Castillo, John Huang, Soren Madsen, Wendy N. Edelstein, Andrew Shapiro

Jet Propulsion Laboratory
California Institute of Technology
4800 Oak Grove Drive
Pasadena, CA 91109-8099

Abstract -- Very large phased array antennas provide a wide range of capabilities for NASA's Earth science remote sensing applications. Future Earth science missions will require very large arrays placed in high orbits such as Middle or Geosynchronous Earth orbits (MEO or GEO). For these very large arrays the radar mass, volume and cost will be prohibitive if we rely on current rigid manifold phased arrays. Membrane-based antennas provide a means to reduce the mass, launch vehicle stowage volume and overall cost associated with rigid radar systems. However, before we can realize membrane phased arrays in space we have to overcome many challenges. One of these challenges is developing an active membrane phased array. This paper discusses the challenges of placing Transmit/Receive (T/R) modules on a membrane array to achieve an active phased array.

I. INTRODUCTION

Lightweight, large-aperture, electronically-steerable space-based radar antennas are required to address the Earth Science Enterprise future science measurement needs. A large-aperture, scanned phased array will enable measurements that are otherwise impossible. Large apertures will enable repeat-pass interferometric Synthetic Aperture Radar (SAR) missions to be flown at higher altitudes, i.e Medium or Geosynchronous Earth orbits (MEO or GEO), thereby offering greatly improved Earth coverage for shorter interferometric repeat times. Electronic scanning will allow the operational flexibility required to maximize the science benefits of data acquisitions, further reducing the effective revisit times of important target areas. In the near term, such missions will offer fine temporal sampling of 3-D Earth surface displacements at subcentimeter accuracies. Such data will improve our understanding of geophysical processes including seismic activity, volcanism, and glacial flow, and will consequently aid in our ability to forecast earthquakes and other associated hazards. In the far term, the nearly instantaneous accessibility offered by high-altitude SAR systems will dramatically enhance our ability to respond to natural disasters when and where they do occur [1, 2]. Large apertures will also be important in DoD applications for similar reasons.

Conventional phased-array antenna design and manufacturing processes will not meet the performance and cost goals of these future space-based SAR missions. Current systems are designed using modular architectures where electronic components are individually packaged and integrated onto rigid manifolds or panels. One method to dramatically reduce the weight, volume and associated cost of space-based SAR is to replace the conventional rigid manifold antenna architecture with a flexible thin-film membrane. This has been demonstrated as a passive array with corporate-fed RF signals (Fig. 1) [3].

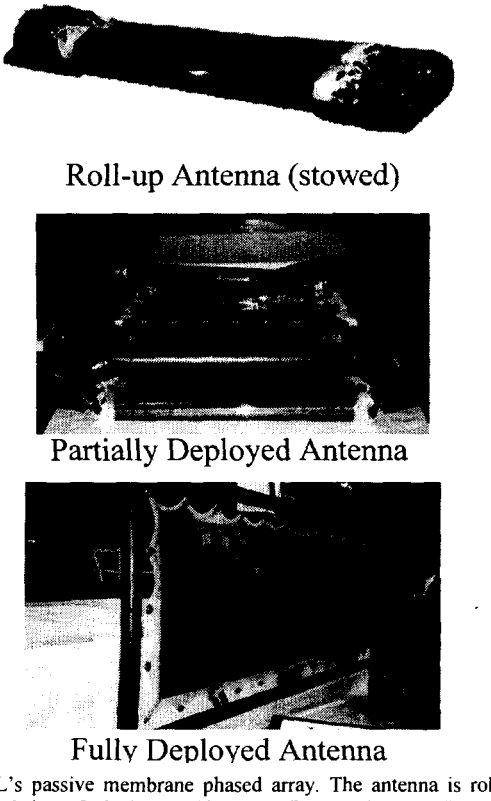

Fig. 1. JPL's passive membrane phased array. The antenna is rolled up during launch (top). It deploys and becomes flat once in space (bottom).

Fig. 1 is a patch antenna prototype where multiple layers of stretched membranes are supported by a space-inflatable planar frame structure. With membrane antenna technology, an order-of-magnitude reduction in antenna aerial density can be achieved. JPL's membrane antenna has demonstrated aerial densities of less than 2 kg/m^2 which include structure and aperture. This is in comparison to 20 kg/m^2 for the phased array used in the Shuttle Radar Topography Mission (SRTM). The measured performance for JPL's membrane antenna is 80MHz bandwidth at L-band, dual-linear polarization, 74% aperture efficiency, and fixed beam at boresight. Flexible membrane antennas could further revolutionize space-based SARs if they are designed as active antennas capable of 2-D electronic beam scanning. By developing membrane compatible electronics and manufacturing techniques, ultra-lightweight, large aperture antennas with large scanning angles in azimuth and elevation would be possible.

The T/R modules placed on a membrane have to be packaged and attached using flex compatible technology. Due to the large number of active elements (tens of thousands of elements for a SAR in Geosynchronous orbit) and the high data rates generated the RF, digital and power distribution becomes challenging and the heat dissipation from the modules needs to be taken into account [4].

II. Antenna Architecture

Fig. 2 shows the architecture of this membrane-based phased array including the T/R modules. The radiating aperture is a patch array similar to the passive antenna shown in Fig. 1. The array is composed of 2 layers with patches on one layer and the ground plane for the patch on the second layer. Each patch of the array has a T/R module associated with it. The membrane is made from 2mil-thick Kapton with 12μm copper layers. The T/R electronics are in the backside of the ground plane and are coupled to the patch via a slot feed. Grounded Co-Planar Waveguide (CPW) transmission lines are used for connecting the components of the (T/R) module

III. T/R Module

The simplified block diagram of the L-band T/R module is shown in Fig. 3. The transmit chain (top portion in the circuit) consists of a driver and a power amplifier and the receive chain (bottom portion in the circuit) consists of a low noise amplifier (LNA). A switch at the input and another one before the phase shifter is used to select the transmit and the receive paths. A 6-bit phase shifter is common between the transmit and receive paths. The input switch requires lower loss and higher power handling capability compared to the switch at the back end. The RF isolation of this switch is also critical to protect the LNA during transmit. The transmitter power peak depends on the orbit and the application. For Geosynchronous orbits a peak power of 5 Watts is desirable [1,2].

We are using M/A-Com's MAAPGM0036 with 1.2W of peak power at the output stage of the transmitter, and MAAPGM0026 as the driver for the power amplifier. The LNA is MAAM12000 with a noise figure of 1.6 and gain of 28dB. The switch, MASW6010G, is a single pole double throw (SPDT) switch. The phase shifter, MAPCGM0001 is a 6-bit phase shifter with parallel TLL controls. All these parts are M/A-com GaAs MMIC's.

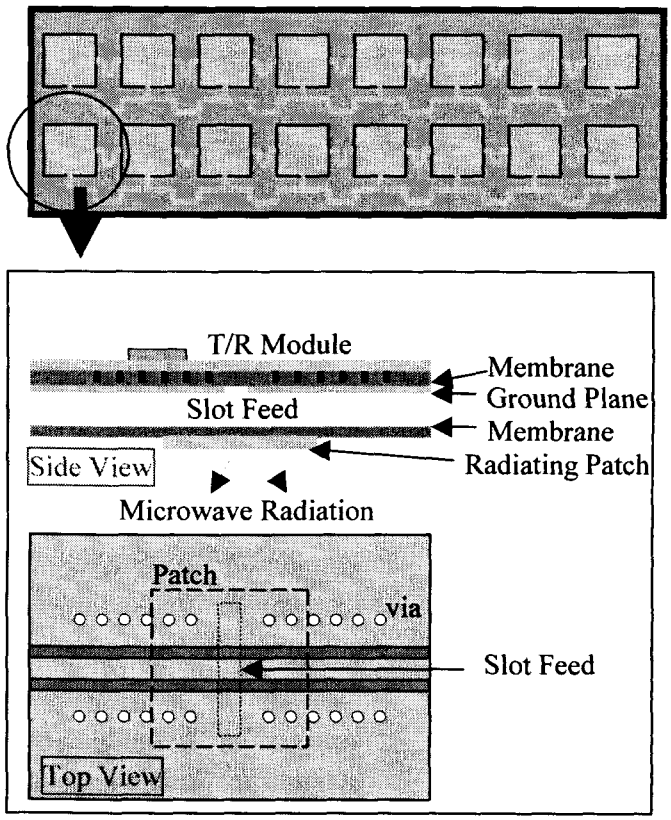

Fig. 2. Antenna Architecture. The top view of a 2x8 element portion of the array (top). The unit cell of the array (bottom)

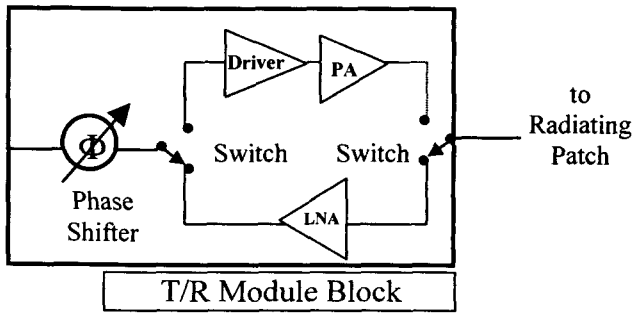

Fig. 3. T/R module block diagram.

IV. ATTACHMENT

Materials typically fail in two modes, first in the bulk of the material, second at the interface to another material. We have a pretty good understanding of most of the bulk properties of materials and can design around these properties. The second mode of failure is much more difficult to get information on because it depends on local atomic structure at the interface which is a very thin layer. If we increase the number of interconnect levels, we increase the number of material interfaces and the number of these thin layers. Therefore we provide the system with more opportunities for failure and will ultimately result in a less reliable product.

There are 2 two methods for packaging and attaching of the T/R module components onto the membrane. One method is to package the T/R and then attach the package to the membrane. The other method is to directly attach the bare die. When using bare die there will be a reduction of at least one level of interconnects and as a result, an improvement in reliability. For protection from radiation and other environmental effects the shielding could also be directly attached to the membrane without the need to use of a package for the die.

We are considering two methods for the direct die attach of the T/R components. The first method is the flip chip attachment of bare die onto the membrane. Fig. 4 shows the flip chip attachment of the LNA onto the Kapton substrate. In order to facilitate our measurements we have mounted the flex substrate onto a rigid board and connectorized it. However the ultimate T/R module will be directly mounted on a flex substrate. Fig. 5 demonstrates a test die flip chip attachment onto a flex substrate.

For this project we are forced to use commercially available die for cost saving. Most available die are GaAs MMIC's. These GaAs die are brittle (compared to Si), and their pad size and spacing makes them inappropriate for flip chip attachment. Therefore even though flip chip might be ultimately the most reliable approach for T/R components, it might not the best choice in this case. For this project we are also considering the use of wire bond as a second approach to attachment of bare die. Finally, we can also use the surface attachment of packaged components.

Under a separate activity funded by Office of Aerospace Technology (OAT), Advanced Measurement and Detection (AMD) project, the reliability of Si flip chip on flex is being studied and compared to other attachment methods during thermal cycle. It is believed that current advancements in Si technology will eventually enable an L-band single chip Si T/R module. The flip chip attachment will be more reliable for this Si chip compared to our GaAs die. The results of this study will be ultimately very helpful for this project.

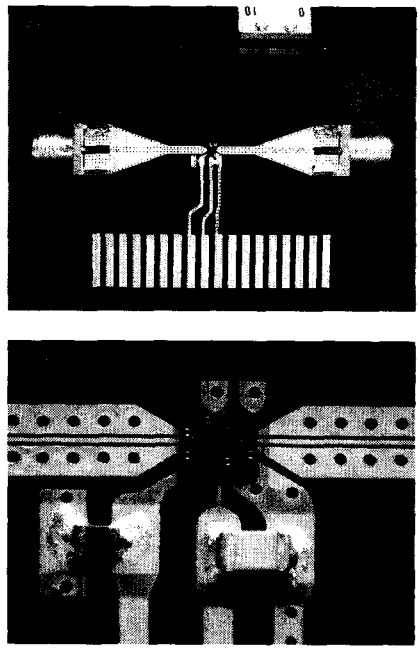

Fig. 4. Flip chip connection of the T/R module LNA onto Kapton (top). Close-up of the circuit shows the LNA die and 2 capacitors (bottom).

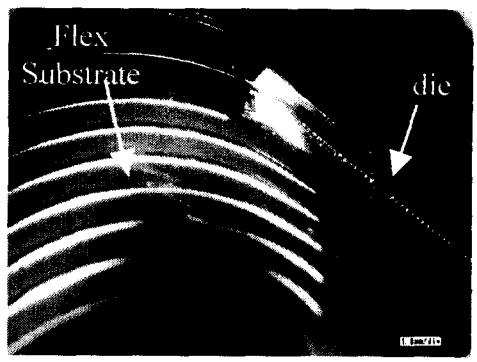

Fig. 5. Flip chip connection of a test die onto a flex substrate.

V. ANTENNA FEED

The Advanced Components Technology (ACT) sponsored activity presented in this paper is focused on building a membrane compatible T/R module. If successful we are planning to combine the T/R module developed in this project with some of the membrane technologies being developed under a separate OAT-sponsered program. This would allow a unit cell and eventually a 2x8 element membrane SAR prototype demonstration. Office of Aerospace Technology's, Advanced Detection and Measurements program has been supporting technologies related to membrane SAR for the last few years. Some of the authors are currently working on a membrane-based antenna feed development. Fig. 6 shows this antenna feed. The top portion of the figure matches the side view of the antenna shown is Fig. 2. The antenna patch is labeled as #3 in the figure. #1 and #2 in the top figure are the two sides of the top Kapton layer. (Note that this figure does not show the Kapton layers in either layer). A microstrip (#1 in the bottom figure) is used to couple the output of the T/R module to a slot (#2) located in the ground plane. If successful our plan is to integrate the T/R module and the feed for a completely functional unit cell antenna. The next step would be to develop a 2x8 element scanning array using these technologies. This would allow us to test the system functionality and architecture of a membrane phased array.

VI. THERMAL MANAGEMENT

One of the challenges of a membrane-based antenna is thermal management. The thin film membrane material typically consists of Polyimide, which is not a good thermal conductor. Our preliminary simulations show that for a MEO mission the temperature of the layer containing the electronics changes from –25 °C to –90°C. This assumes that the antenna has a third layer protecting the T/R electronics. This layer is not shown in Fig. 2. Our next step is to simulate the temperature changes of the T/R module when the radar is functioning.

VII. SUMMARY

We are currently developing a T/R module that is compatible with membrane phased arrays. The ultimate goal is to use this T/R module for a 2x8 element phased array prototype demonstration. To do this we will leverage the AMD-funded activity addressing other technologies related to membrane antennas. Antenna feed design and development of interconnects are some of these technologies. This effort considers the membrane thermal management issues and the final prototype will be tested in a relevant environment.

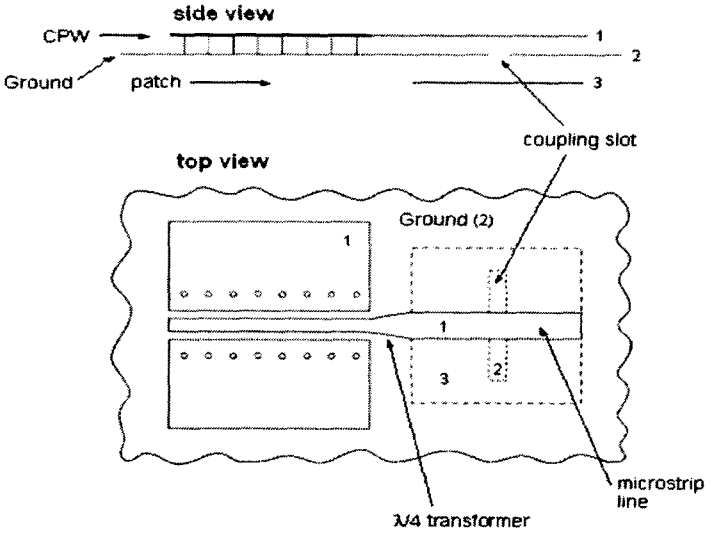

Fig. 6. Antenna feed.

ACKNOWLEDGEMENT

The research described in this paper was carried out at the Jet Propulsion Laboratory, California Institute of Technology, under a contract with the National Aeronautics and Space Administration. This work was supported by NASA Earth Science Technology Office (ESTO) under the Advanced Component Technology (ACT) program, award No. ACT-02-0054, and by Office of Aerospace Technology, Advanced Measurement & Detection (AMD) project, JPL task "Membrane SAR".

REFERENCES

[1] S.N. Madsen, W. Edelstein, L.D. DiDomenico, J. LaBrecque, "A geosynchronous synthetic aperture radar; for tectonic mapping, disaster management and measurements of vegetation and soil moisture," IEEE Symposium on Geoscience and Remote Sensing, IGARSS'01, pp. 447-449, 2001.

[2] S.N. Madsen, C. Chen, and W. Edelstein, "Radar Options for Global Earthquake Monitoring," IEEE Symposium on Geoscience and Remote Sensing, IGARSS'02, July, 2002.

[3] J. Huang, H. Fang, B. Lopez, and M. Lou "The development of inflatable array antennas," IEEE Antennas and Propagation Magazine, vol. 43, no. 4, Aug. 2001, pp. 44-50.

[4] A. Moussessian, L.D. DiDomenico, W. Edelstein, "Architectural Study of Active Memebrane Antennas," ANTEM Conference, July 2002.