Transferred Substrate Heterojunction Bipolar Transistors for Submillimeter Wave Applications

Andy Fung, Lorene Samoska, Peter Siegel
California Institute of Technology Jet Propulsion Laboratory, Pasadena, CA 91109, USA

M. Rodwell, M. Urteaga, V. Paidi, Dept. ECE, University of California, Santa Barbara, CA, USA

Roger Malik, RJM Semiconductor, Berkeley Heights, NJ 07922, USA

andy.k.fung@jpl.nasa.gov

Introduction

- At JPL we are in collaboration with UCSB and RJM Semiconductor to develop advanced Indium Phosphide Heterojunction Bipolar Transistors (InP HBTs) in a low parasitic Transferred Substrate process and a high yield mesa process with the goal of producing the fastest transistors and circuits.

- The approach is to incorporate the Transferred Substrate process with aggressive lateral scaling with our electron beam lithography system.

- Specific near term applications include amplifiers for local oscillators for high frequency upconverters and downconverters, and active multiplier circuits.

Background

- HBT Example: AlInAs/InGaAs/InP Double HBT

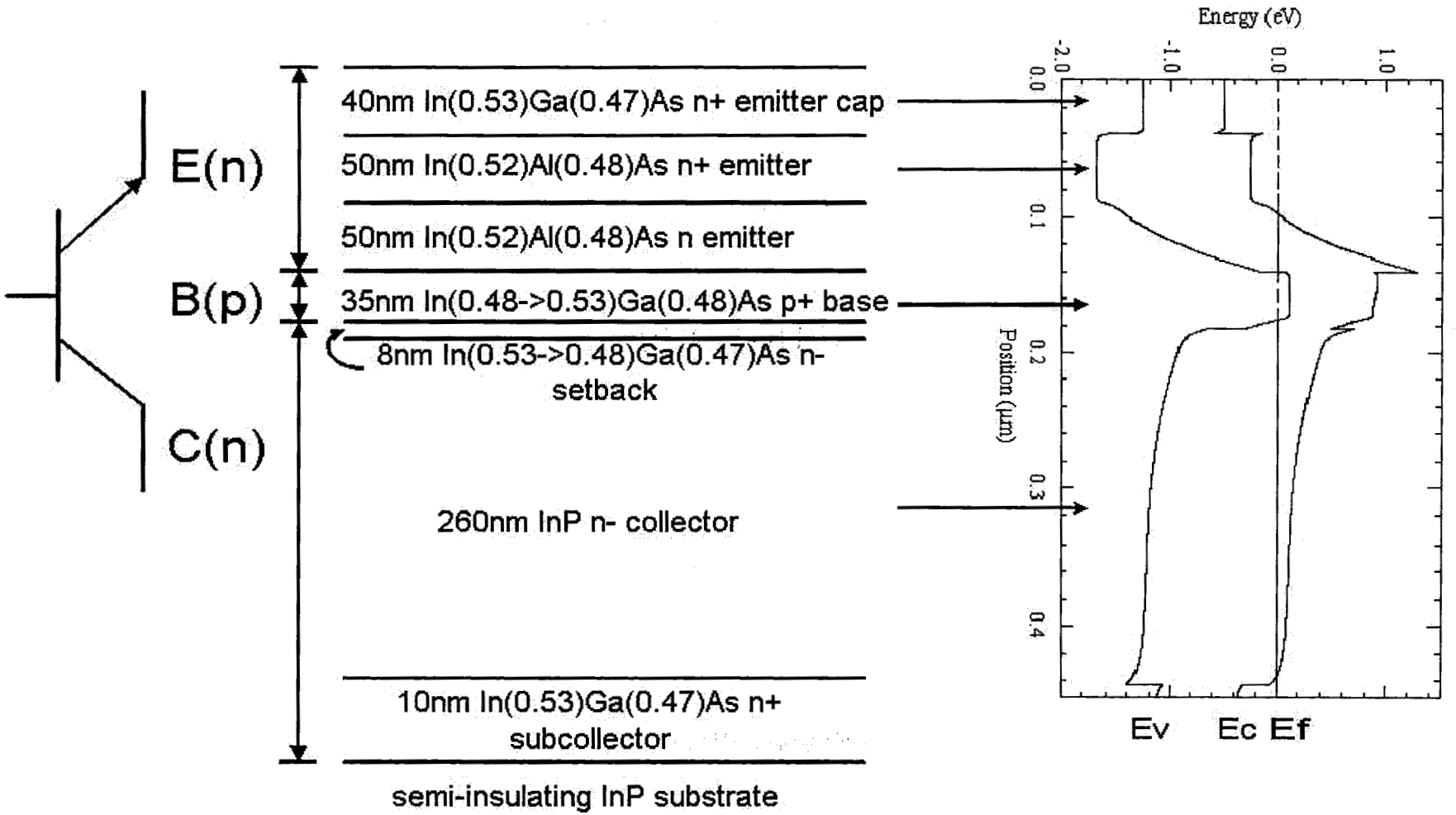

* Energy level versus position diagram generated with Bandprofiler of W. Frensley UTDallas

Background

- HBT Example: AlInAs/InGaAs/InP DHBT

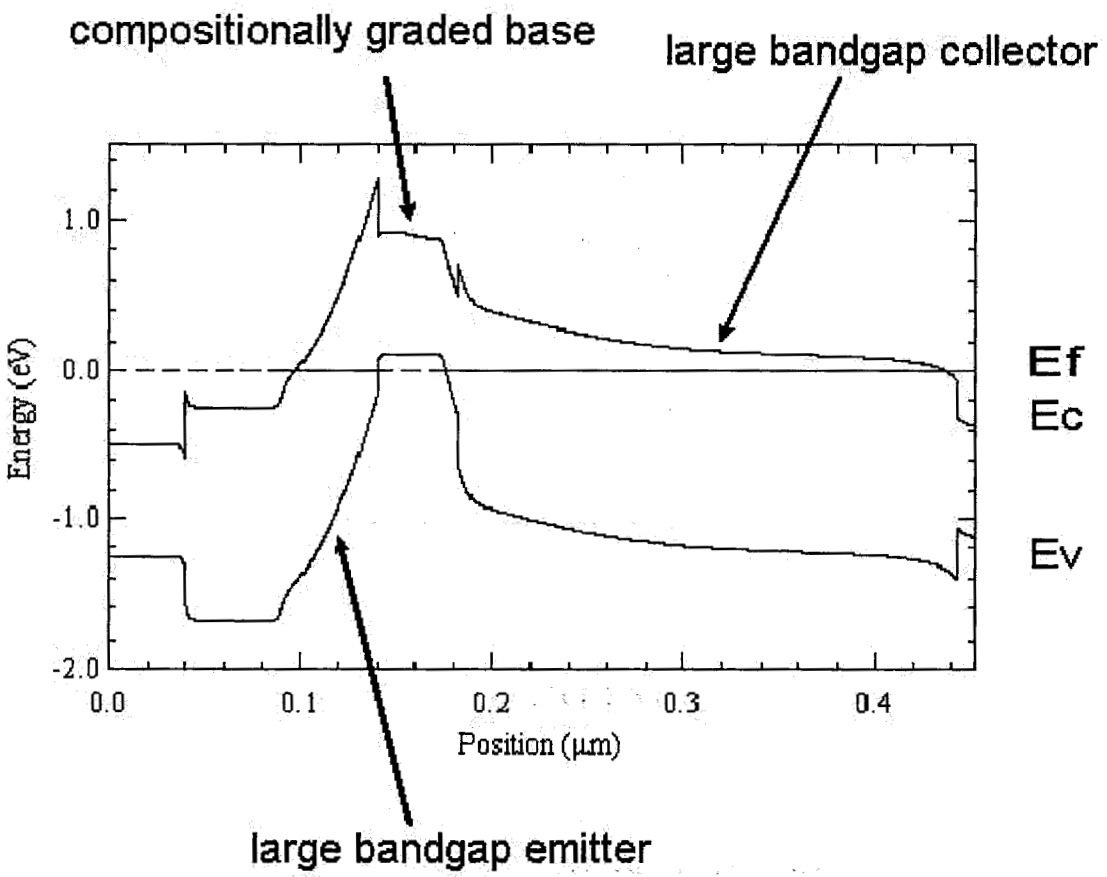

* Energy level versus position diagram generated with Bandprofiler of W. Frensley UTDallas

Background

- HBT Example: AlInAs/InGaAs/InP DHBT

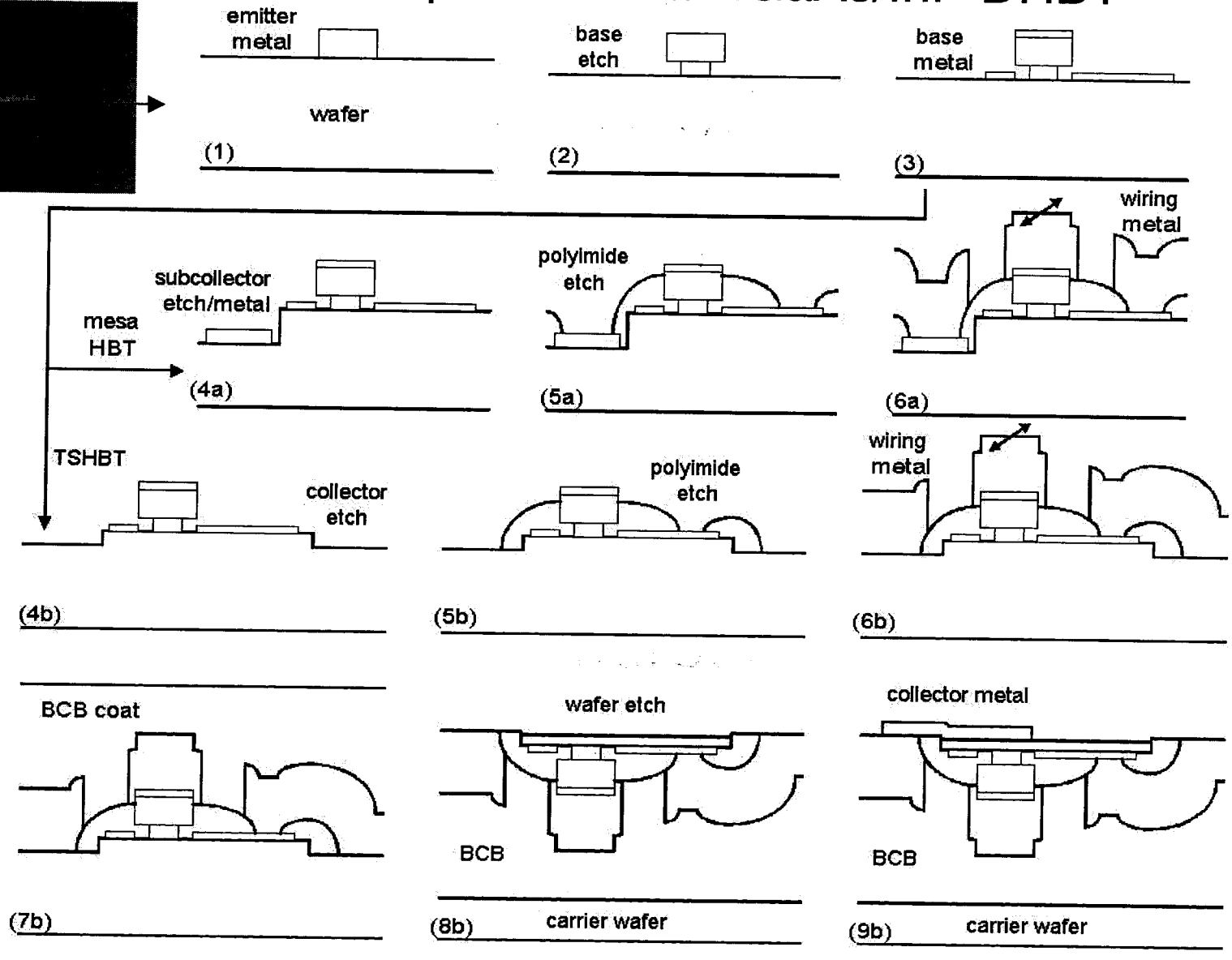

Background

- The figures of merit of high speed transistors are the current gain cutoff frequency (F_t) and maximum frequency of oscillation (F_{max}).

$$F_t = 1/(2\cdot\pi\cdot\tau_{ec}) \qquad \tau_{ec} = \tau_e + \tau_b + \tau_{bc} + \tau_c$$

τ_{ec} is the total emitter to collector delay time of the HBT.

$$F_{max} \gtrsim (F_t/(8\cdot\pi\cdot R_b\cdot C_{cb}))^{1/2}$$

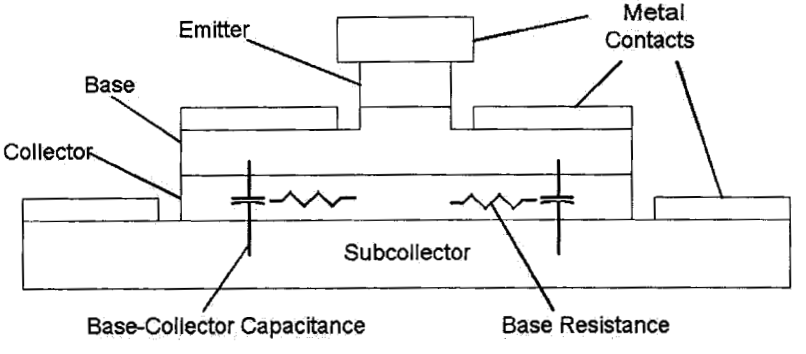

R_b is the HBT base resistance

C_{cb} is the base to collector capacitance.

Background

- Transferred Substrate method for improving F_t and F_{max}
  - Standard mesa HBTs have a large base-collector overlap.
  - TSHBT process reduces the amount of overlap because the collector contact is defined on the backside of the wafer.
  - Minimizing base-collector overlap reduces C_{cb}, increasing F_{max}.
  - To improve F_t and F_{max} simultaneously, TSHBTs need to be scaled vertically to reduce the distance electrons need to travel and thus τ_{ec}, also the base needs to be doped as high as possible to decrease R_b.

Mesa HBT

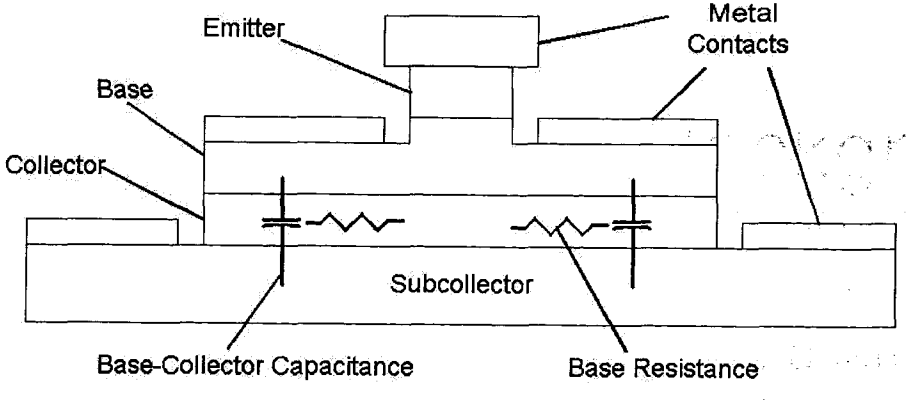

Transferred Substrate HBT

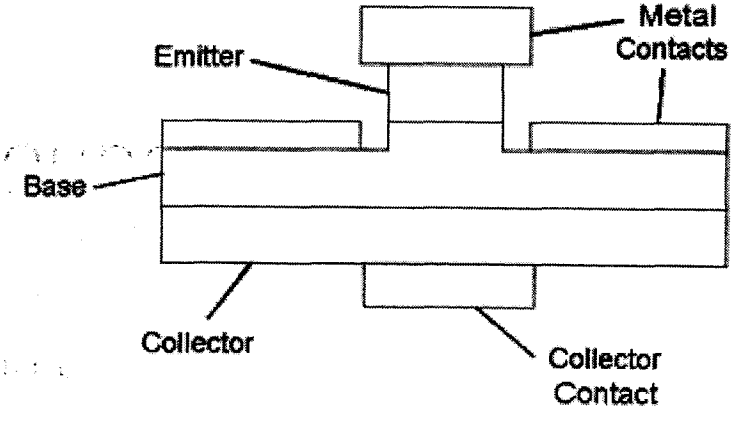

Applications

- Transferred Substrate HBTs can increase performance of systems.
  - Ultra-high speed components can be realized: amplifiers, voltage controlled oscillators, analog to digital converters, flip-flops, multipliers, multiplexer, etc. We envision +300 GHz amplifiers, +100 GHz digital ICs.

Local Oscillators

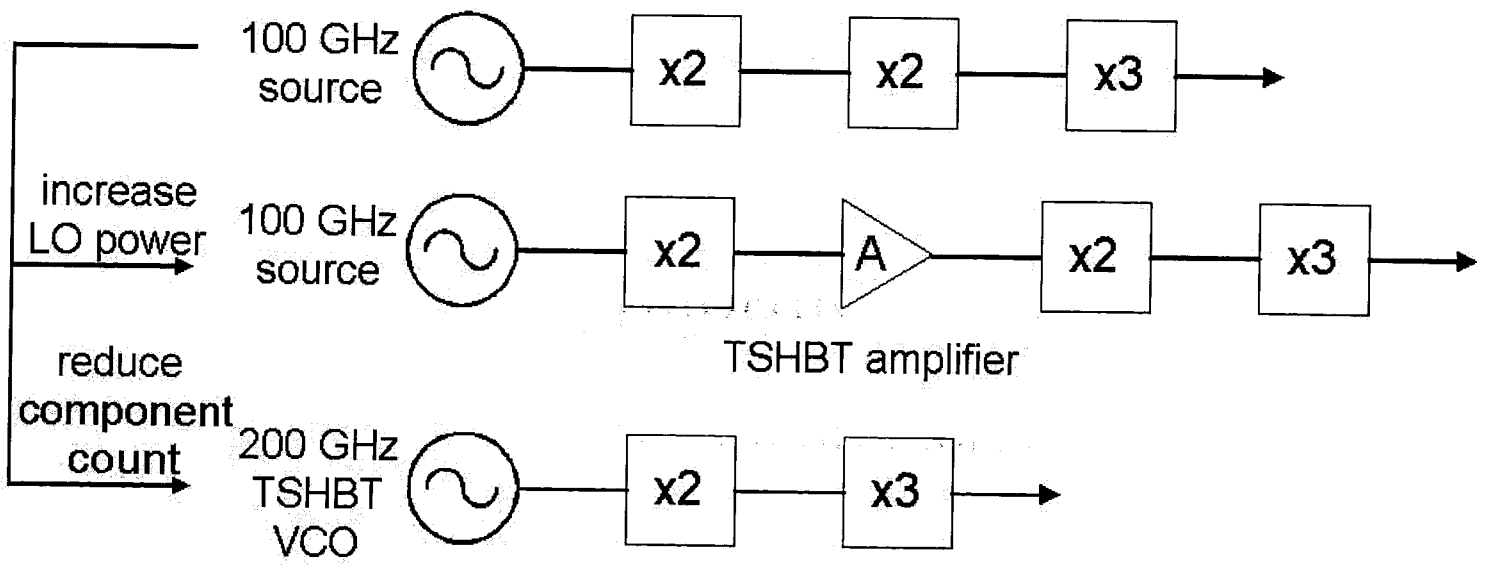

Applications

HBTs in a Terahertz Imager

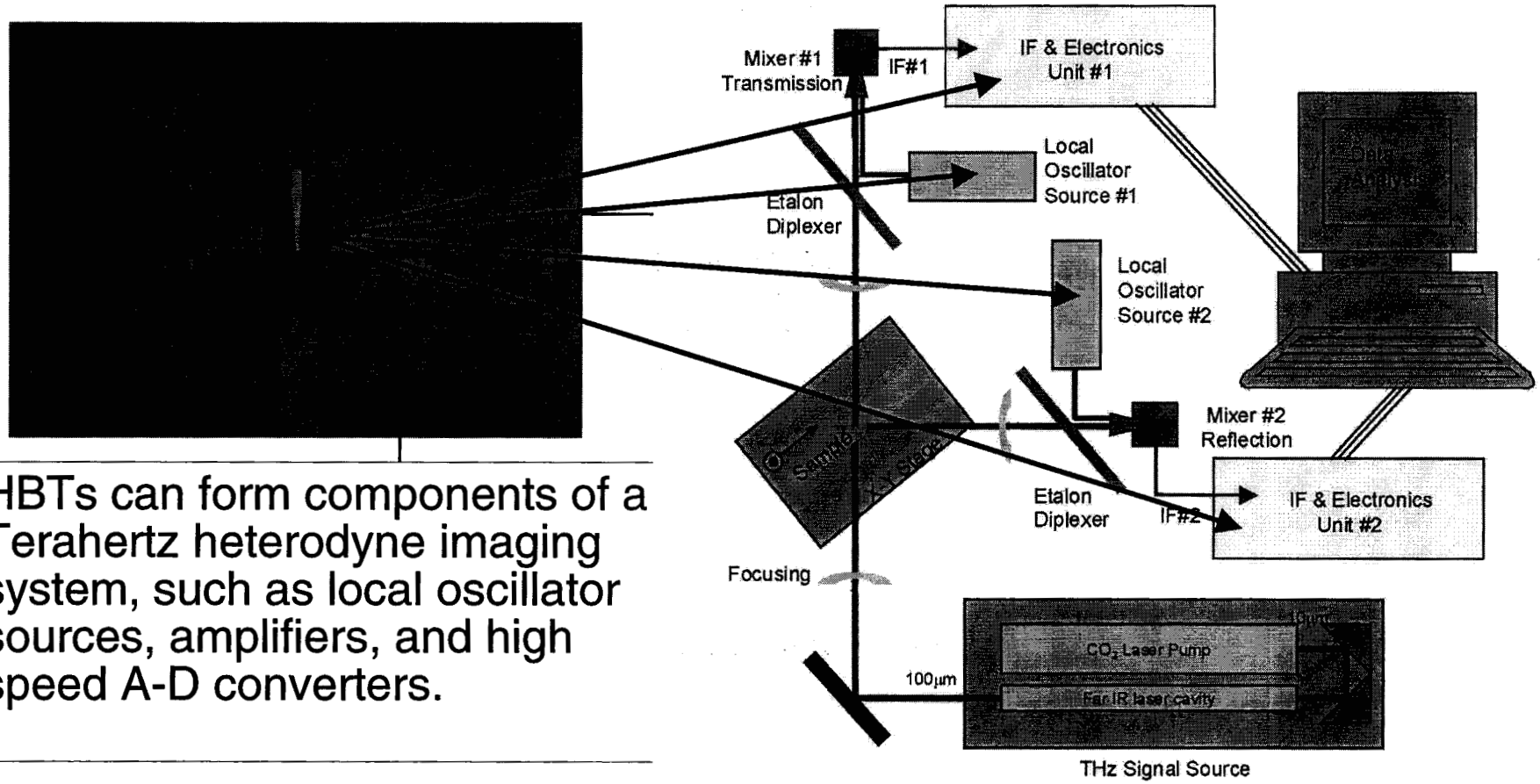

HBTs can form components of a Terahertz heterodyne imaging system, such as local oscillator sources, amplifiers, and high speed A-D converters.

Applications

GHz Autocorrelators

Advancements in Spectrometers for Astronomy, Planetary Science and Chemical and Biological Detection with TSHBTs and DHBTs

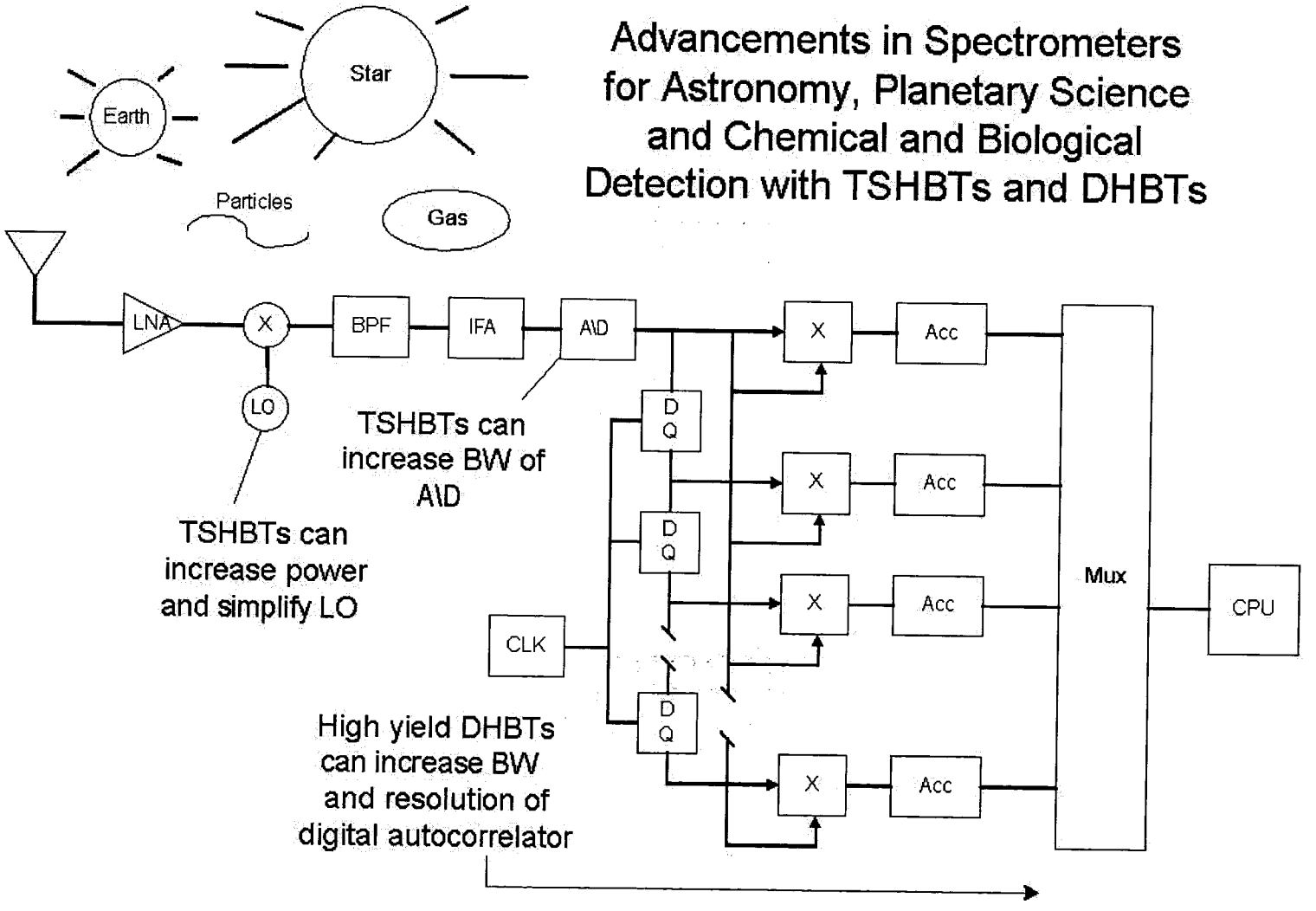

Applications

GHz Communications

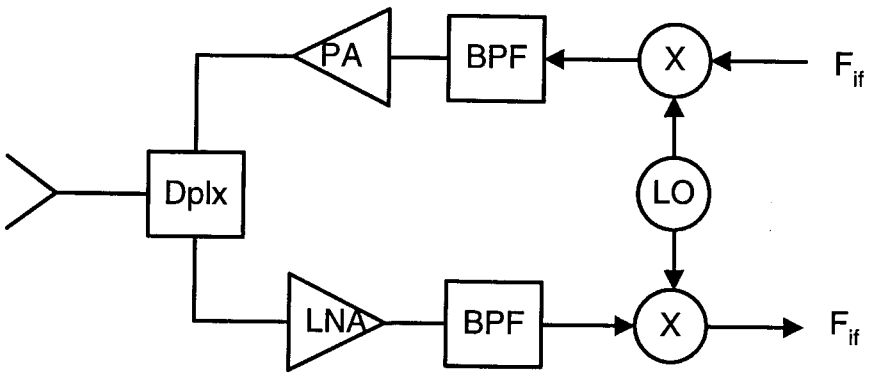

Components can be used to enhance transceiver front ends.

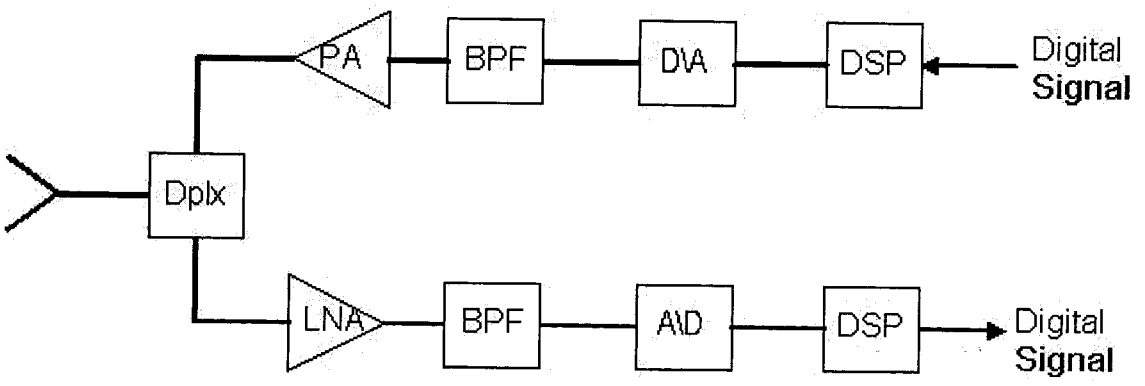

Ultra-high speed components can be used for future all digital transceivers.

Development of TSHBTs at JPL

- Identifying and improving good epitaxial material is critical.

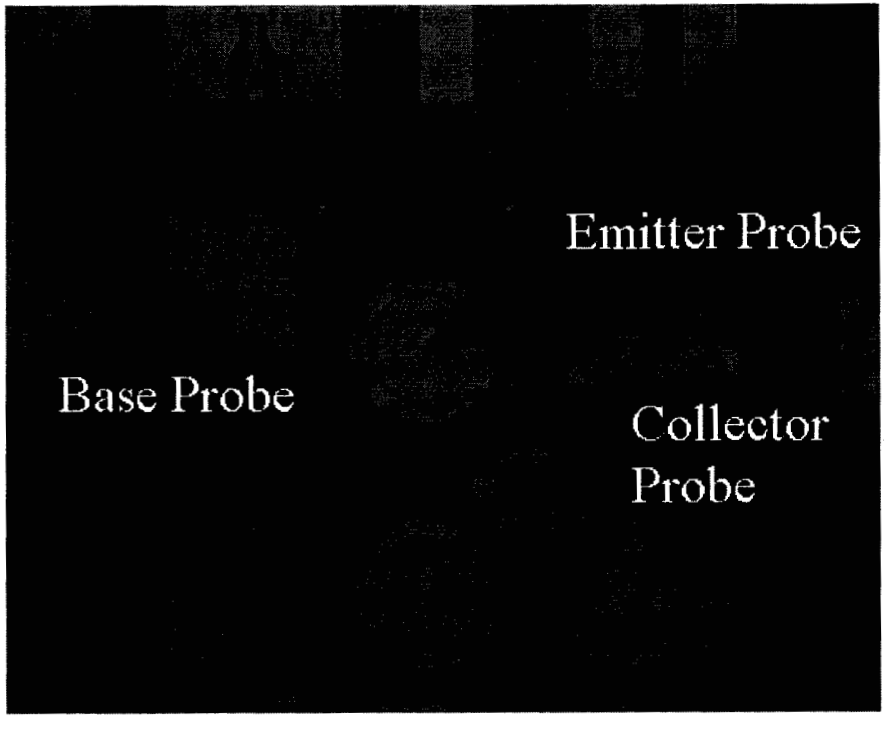

Large circular 10,000 μm^2 emitter area mesa HBTs are used to screen and optimize epitaxial material.

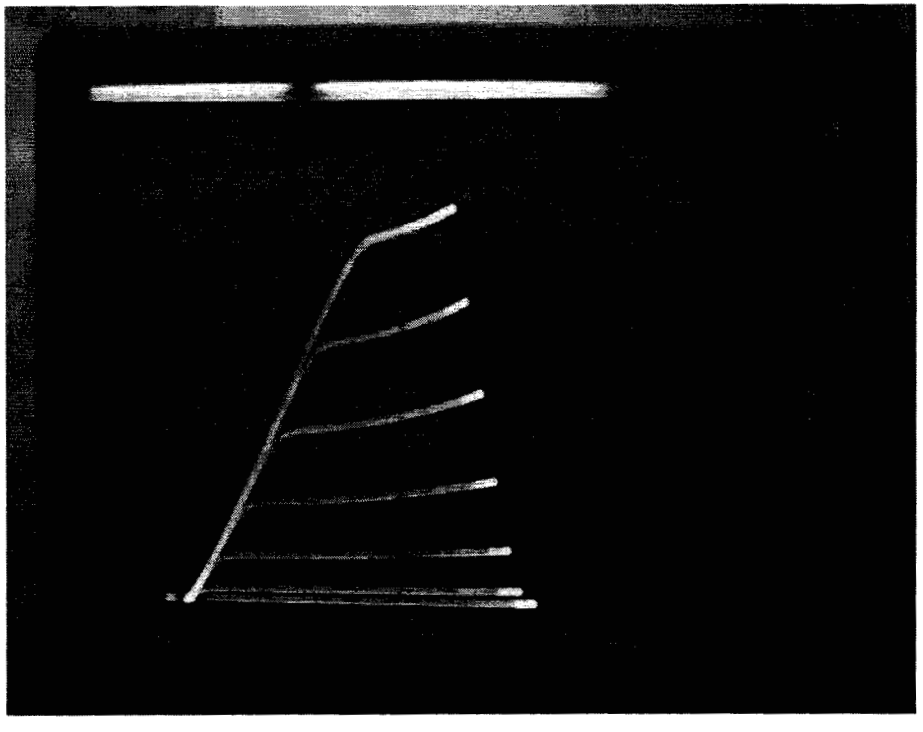

I_c vs. V_{ce} for different base currents of large mesa HBTs. Here small signal β is 15 to 20.

Development of TSHBTs at JPL

- Proving out process steps towards TSHBT fabrication:

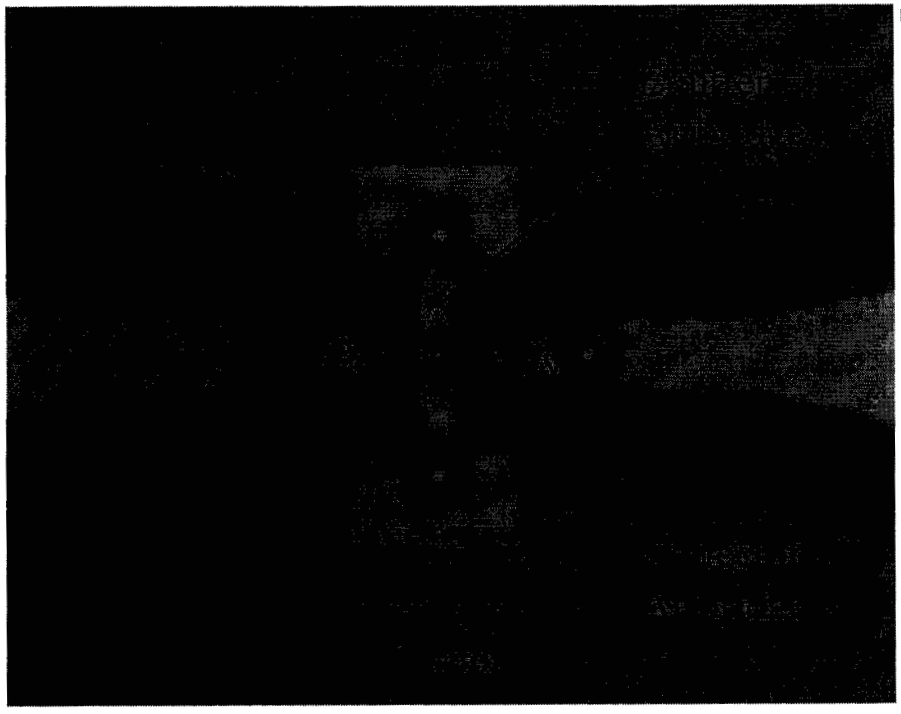

RF mesa HBTs are used to test top side process steps for the TSHBTs and also RF material quality.

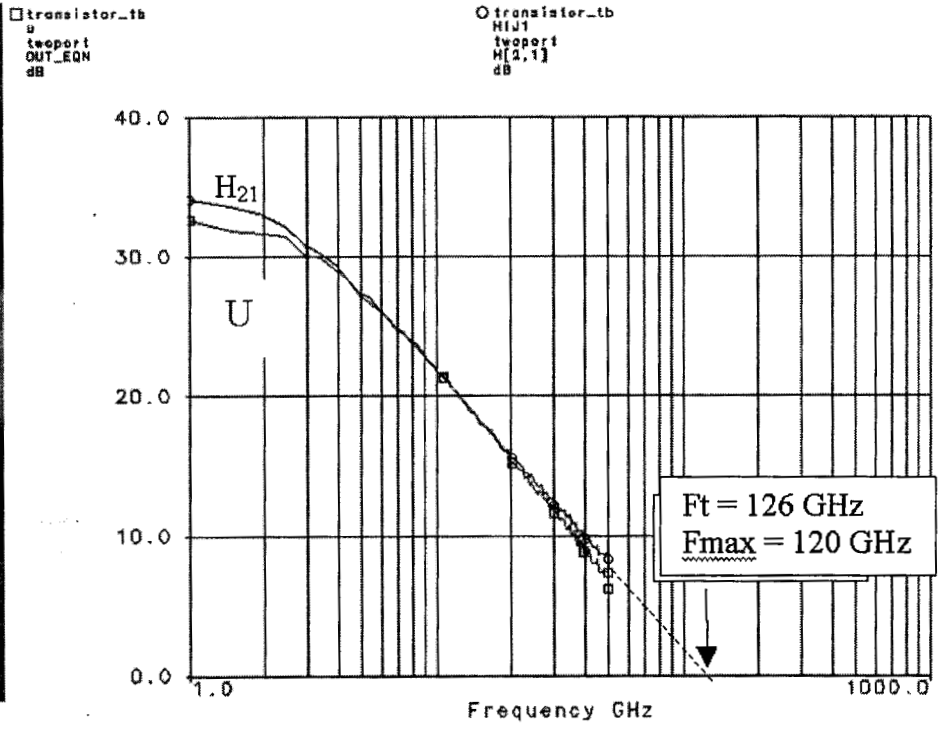

Gain plots of RF HBTs deduced from S-parameter measurements. Emitter current density is 62 kA/cm^2.

Development of TSHBTs at JPL

- First TSHBT sample iteration fabricated at JPL.

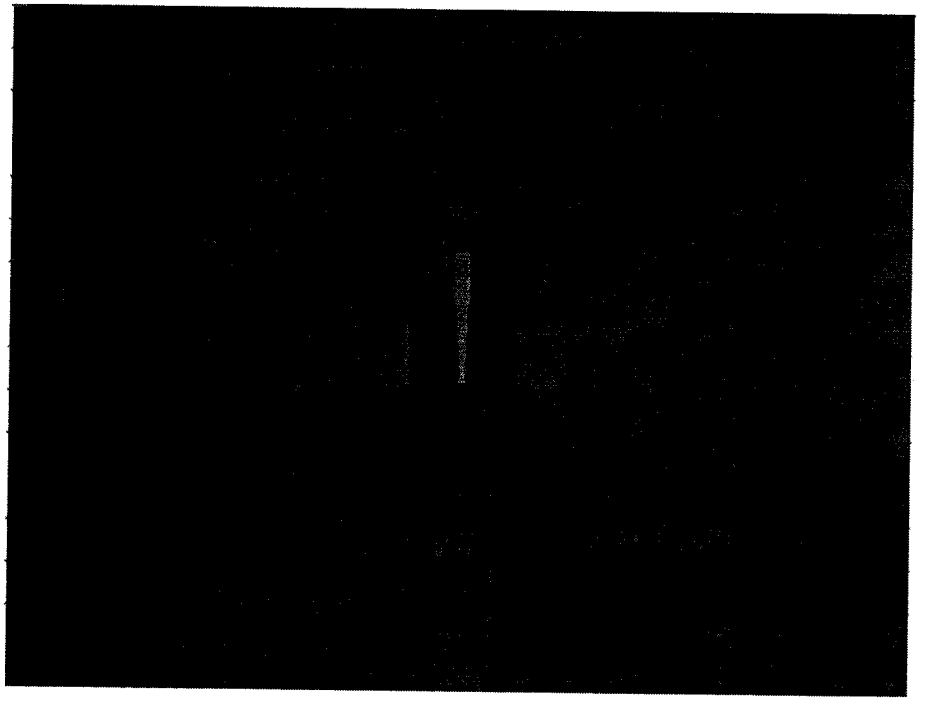

Optical photo of a first generation TSHBT.

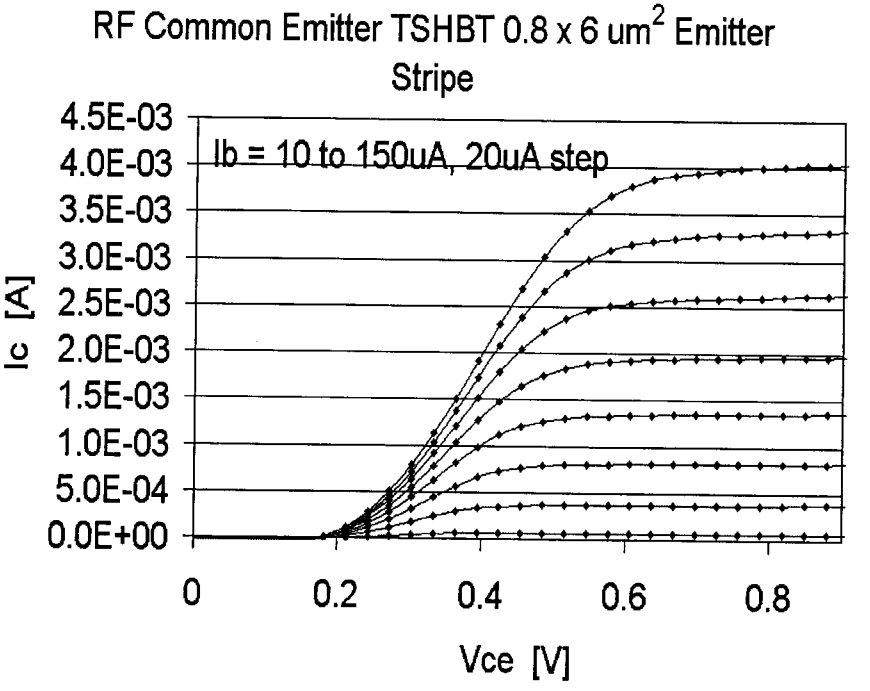

Ic vs. Vce for different Ibs. Small signal β is 36.

Development of TSHBTs at JPL

- First TSHBT sample iteration fabricated at JPL.

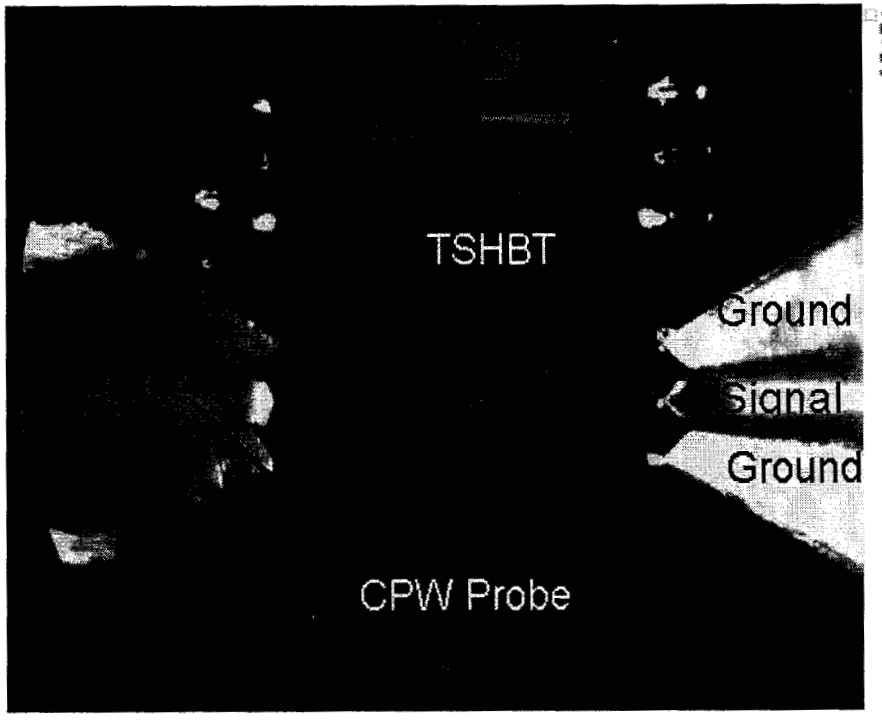

Optical photo of a first generation TSHBT with wafer probes. The CPW probe pitch is 100 μm.

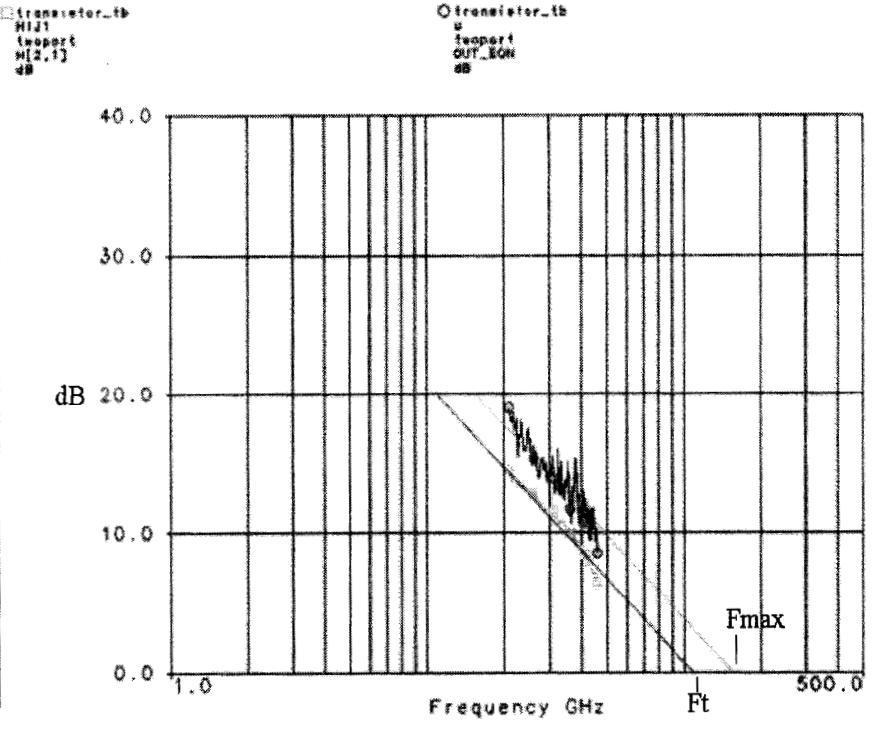

Gain plots of H21 and U versus freq. Extrapolated F_{max} of 150 GHz and F_t of 110 GHz, at an emitter current density of 94 kA/cm^2.

Development of TSHBTs at JPL

- JPL TSHBT integrated process.

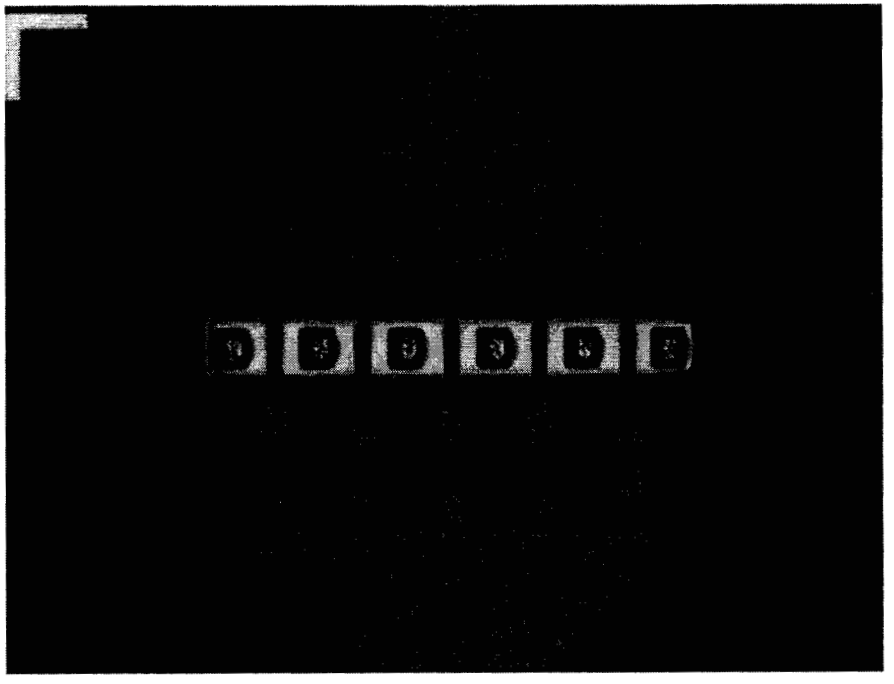

Optical photo of a TSHBT with ballasting resistors during fabrication.

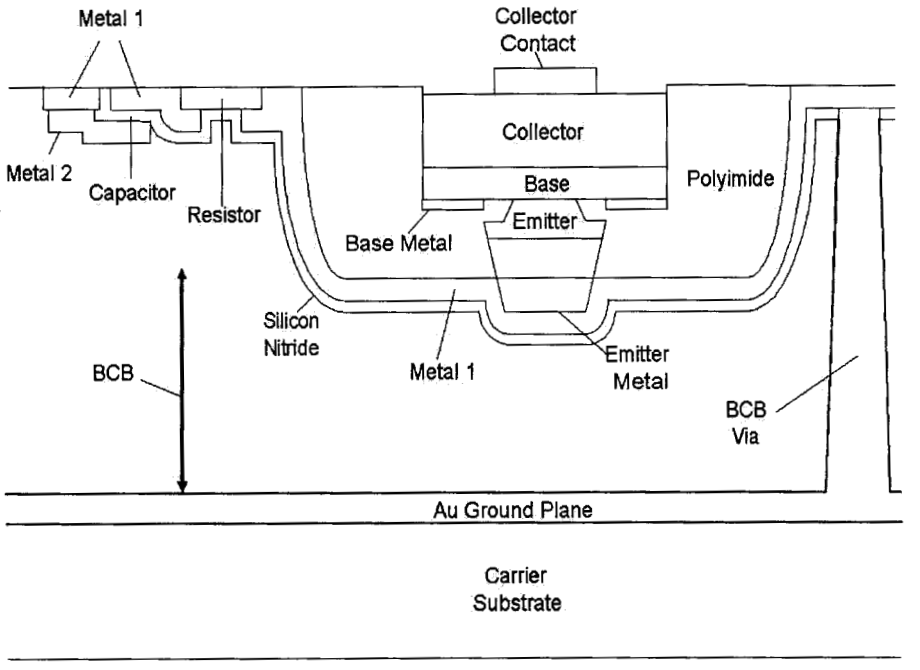

Schematic cross section of a TSHBT device with integrated resistors and capacitors.

Transferred-substrate HBTs for 140-220 GHz Amplification

UCSB
Miguel Urteaga

raw 0.3 μm transistor: 6-11 dB power gain @ 200 GHz

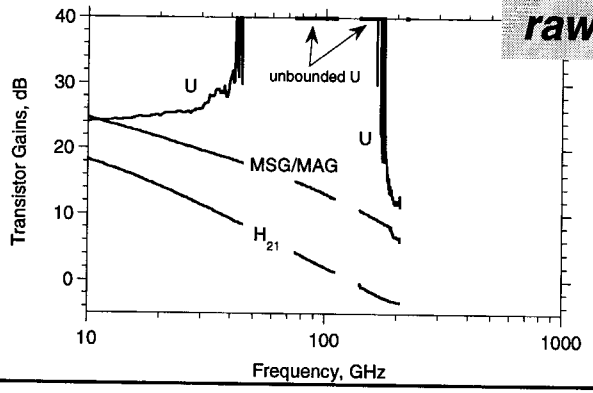

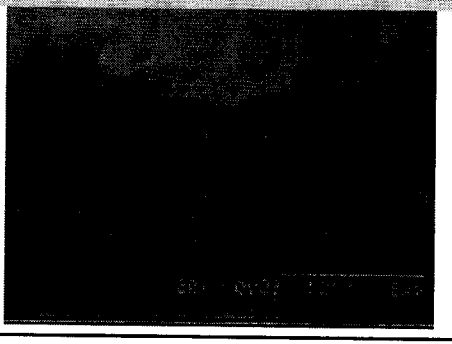

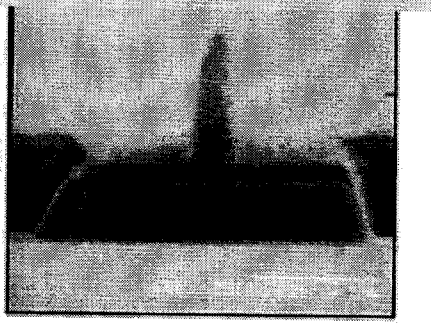

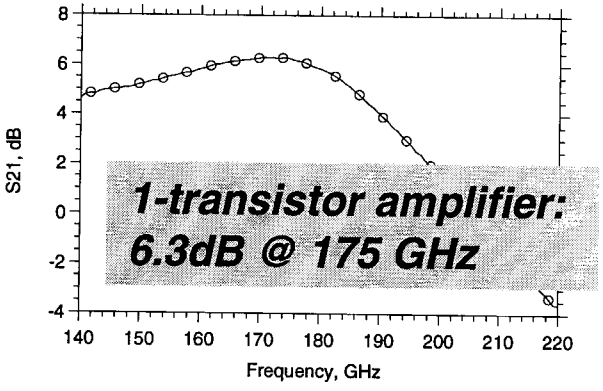

1-transistor amplifier: 6.3dB @ 175 GHz

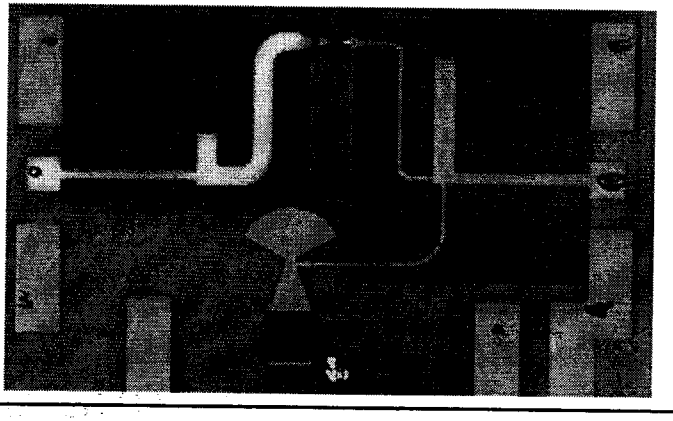

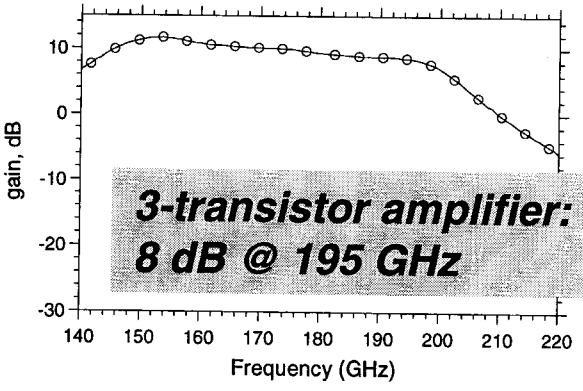

3-transistor amplifier: 8 dB @ 195 GHz

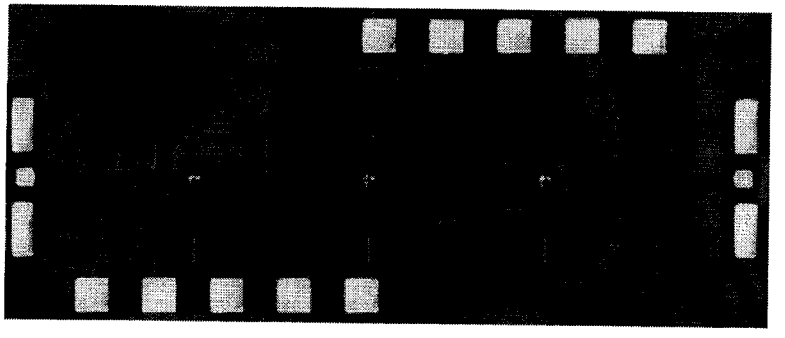

66 GHz HBT master-slave flip-flop

UCSB

Michelle Lee

Objectives: 100 + GHz logic

Approach: transferred-substrate HBTs, microwave / digital design

Simulations: 95 GHz clock rate in SPICE

Accomplishments:
operation to 66 GHz

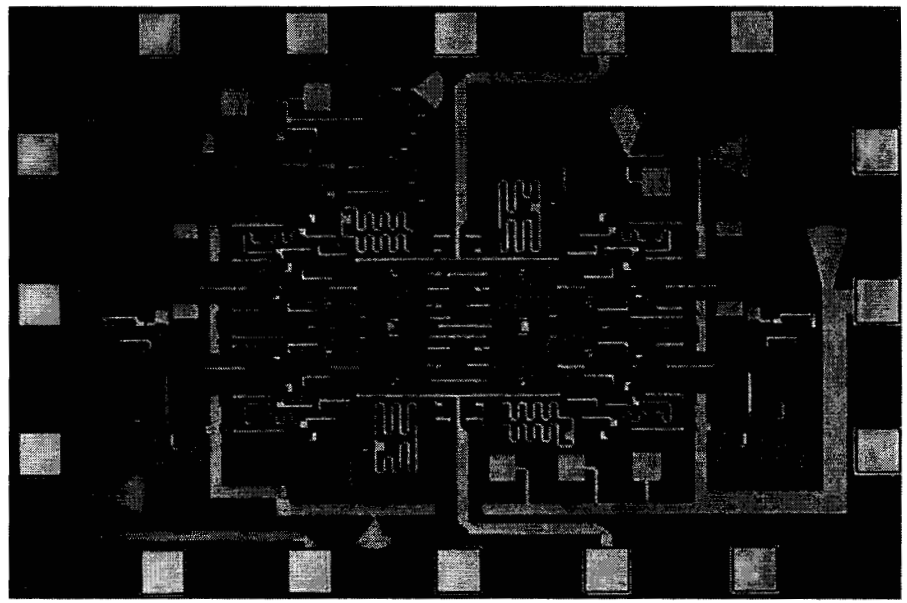

Design features:

- transmission-line bus short signal path
- inductive load
- emitter-follower damping
- [illegible]

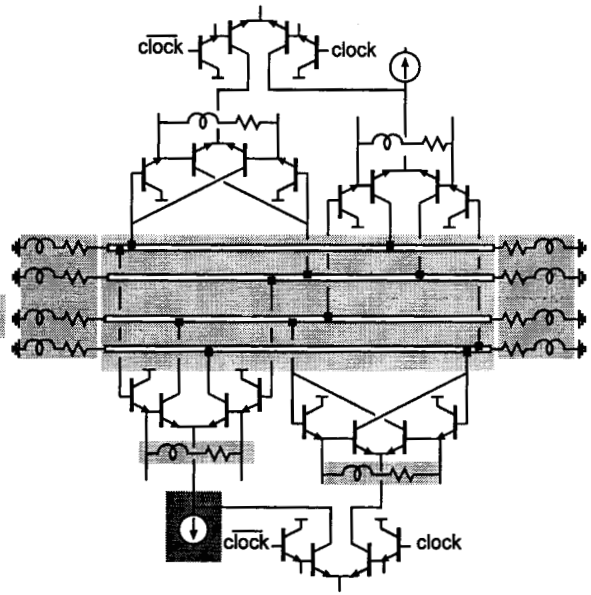

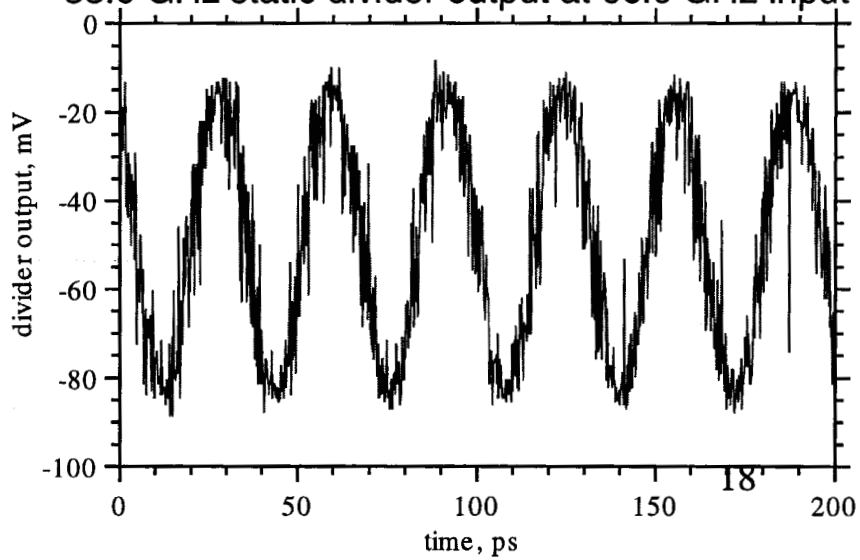

Summary

- JPL in collaboration with UCSB and RJM are developing advanced Transferred Substrate and mesa InP HBTs for the next generation of high performance components.
- These components can be utilized to advance systems for future astrophysics, planetary and Earth science THz missions.
- At JPL we have
  - completed a first set of TSHBTs with a 1 μm stepper lithography process.
  - demonstrated a 2 μm contact lithography RF mesa HBT process, in developing the TSHBT process.
  - developed a reduced process time and step, large sized HBT process for verifying and improving epitaxial material quality.
  - TSHBT Fmax = 150 GHz, Ft = 110 GHz; mesa HBT Fmax = 120 GHz, Ft = 126 GHz. These values will increase with additional scaling and improved epitaxial design and material quality.

Acknowledgments

The research and development presented here was carried out at the California Institute of Technology Jet Propulsion Laboratory, a federally funded research and development center under contract with the National Aeronautics and Space Administration, and by MDA under contract DTRA01-01-P-0222, managed by DTRA.