Optical Path Control in the MAM Testbed

Martin W. Regehr, Brad Hines, Buck Holmes,
Jet Propulsion Laboratory, California Institute of Technology
4800 Oak Grove Dr, m/s 171-113
Pasadena, CA91109
818-354-1693
martin.w.regehr@jpl.nasa.gov

Abstract—Future space-based optical interferometers will require control of the optical path delay to accomplish some or all of three objectives: balancing the optical path in the two arms to within a tolerance corresponding to the coherence length of the star light being observed, modulating the optical path in order to observe the phase of the star light interference fringe, and modulating the path length in order to reduce the effect of cyclic errors in the laser metrology system used to measure the optical path length in the two arms of the interferometer. In the Micro-Arcsecond Metrology (MAM) test bed, three types of actuator are used to control the optical path delay: a coarse actuator consisting of a stepper-motor-driven translation stage supporting a corner cube, a balanced voice coil modulator driving a flat mirror, and two flat mirrors mounted on tripod PZT actuators.

This paper describes the mechanical and electronic designs used in these actuators and the software algorithms developed to control them. The coarse actuator's primary function is to search for the point at which the optical path length in the two arms is balanced. This is accomplished using a software algorithm, which spirals the optical path back and forth over an ever-increasing range until fringes are observed on a CCD detector, which monitors the interfered star light. The control algorithm also provides means for moving rapidly to either limit of the translation stage, to its home position (sensed by a dedicated home sensor), or to the position at which fringes were last observed. The voice coil actuator provides modulation for phase detection and it provides fine control of the optical path difference. The desired path-length modulation is a triangle wave, which is rounded slightly at the points where the velocity of the mirror changes sign. This modulation is approximated using a drive waveform tailored to counteract the internal forces in the modulator and to produce no net acceleration except during the turnarounds. Two mirrors on tripod PZT actuators are driven with commands intended to provide alignment control, together with additional path length modulation over exactly one wavelength of the laser metrology system. The signals for these two functions are combined using software running in a real-time computer.

TABLE OF CONTENTS

1. INTRODUCTION 1
2. COARSE PATH LENGTH CONTROL 2
3. VOICE COIL MODULATOR 3
4. DITHER FOR CYCLIC ERROR SUPPRESSION 5
5. REAL-TIME COMPUTER CONTROL 5
6. CONCLUSION 6
ACKNOWLEDGMENTS 6
REFERENCES 6

1. INTRODUCTION

The Micro-Arcsecond Metrology (MAM) experiment [1], [2] is one of a family of ground-based testbeds that will demonstrate critical technologies for SIM, the Space Interferometry Mission [3]. Of these testbeds, System Testbed 3 (STB-3) [4] addresses integrated 3-baseline operation and dim-star fringe tracking on a structure, the Kite experiment [5] addresses external metrology, the Diffraction testbed [6] addresses models for metrology and starlight propagation, and the Thermo-Opto-Mechanical experiment (TOM) [7] addresses thermal models of optical deformation.

MAM addresses consistency between starlight and internal metrology. The MAM testbed consists of an interferometer (the Test Article, or "TA"), and an Inverse Interferometer Pseudo-Star (the IIPS). Figure 1 shows the optical layout of the test bed. The IIPS is used to generate simulated star light, the observation of which is used to measure the performance of the TA. Both the TA and the IIPS are housed in a large (3m diameter, 12m long) vacuum tank. Infrared laser beams are also launched into both the TA and IIPS using the Metrology launchers shown [8]. These beams travel along paths that are largely the same as the simulated star light paths and are used to measure these paths in a manner similar to that planned for SIM. Tests are normally conducted under vacuum in order to reduce a number of

[1] 0-7803-7651-X/03/$17.00 © 2003 IEEE
[2] IEEEAC paper #1509, Updated January 7, 2003

disturbances, notably convection currents and air-carried temperature disturbances.

Both arms of the TA contain elements that can be commanded to move longitudinally so as to change the path length in that arm. The left arm contains a fast steering

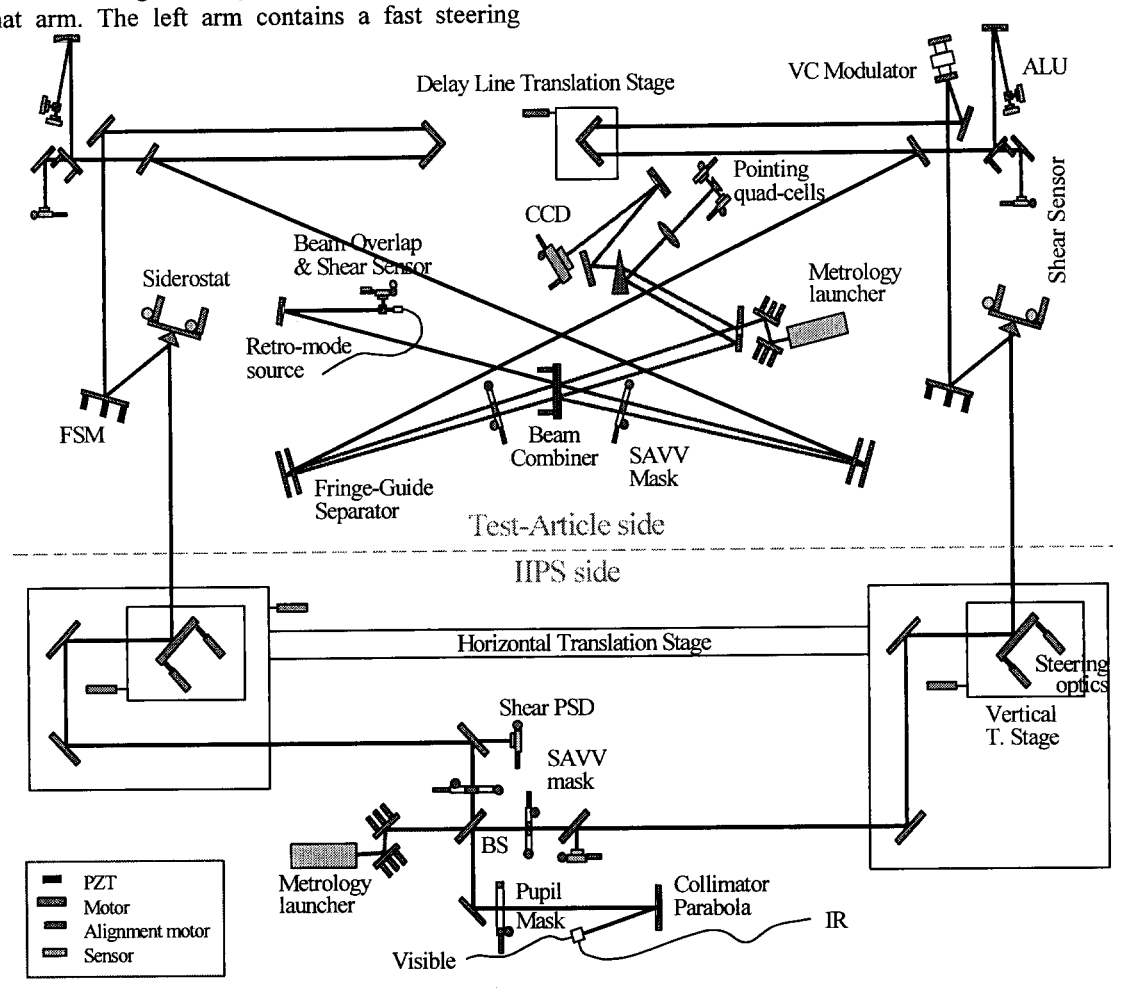

Figure 1 - Optical Layout of TA and IIPS

mirror (FSM), which is used both to maintain alignment and to modulate the path length. The right arm contains a Delay Line Translation Stage, a voice coil (VC) modulator, and an FSM.

2. Coarse Path Length Control

Coarse, motorized pathlength control is needed in MAM for several reasons. During the process of evacuating the tank, it is common for the optical path difference in the two arms of the interferometer to change by more than the amount for which our fine actuators can correct. Moreover, many of our performance tests involve simulating the observation of a sequence of several stars, for which the change in optical path length in the two arms, because of the angular separation of the two simulated stars, also exceeds the range of our fine actuator.

The mechanical construction of the delay line is shown in Figure 2. It consists of a 6.2" clear aperture corner cube mounted on a Physik Instrumente M-511.xS Linear Positioning Stage, which has a recirculating-ball screw drive. The stage is driven by a Phytron Stepper Motor with a 50:1 Gearhead (Model No. VSS 32.200.1.2-VGPL 32/50-HV-6M).

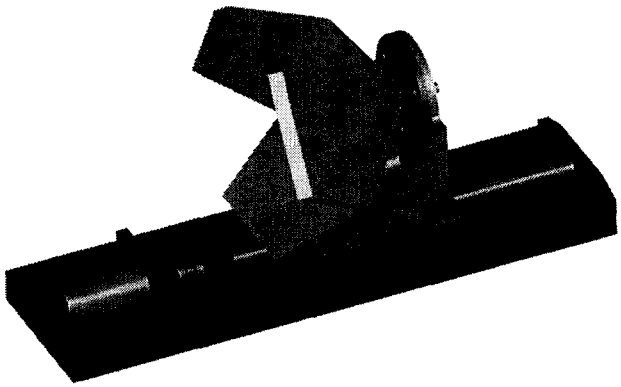

Figure 2 - Delay Line

The maximum speed of the delay line is 1.5 mm/second, which is sufficient to allow the delay line to slew over the range of motion of interest in less than 10 seconds. Home and limit switches on the delay line allow us to locate the cart at a known absolute position, and to protect the cart from being driven into the mechanical stops at the ends of the track. The motor is driven by a Galil DMC1308 motor controller VME card via a Phytron stepper motor driver. This card is installed in the central VME control rack.

One further key function of the motorized delay line is to automate the finding of white light interference fringes. Using a tape measure, it is possible to balance the path delays in the two arms of the interferometer to within a few cm; white light interference fringes will only be observable over a range of perhaps 10 μm. The fringes can be found manually but this is a time-consuming process, which involves testing hundreds of delay line positions and pausing at each position to determine whether fringes are visible. Using computer control of the delay line we are able to find white light fringes in typically less than 5 minutes starting from an initial position, which is 1 cm in error. The algorithm for this is as follows. The delay line begins searching in an initial direction stopping every 15 microns. 0.2 seconds are allowed for vibrations to settle, and then a single 2-ms camera frame is captured and checked for the presence of fringes. If it does not find fringes within a range of 0.5 mm, it returns to its starting point and begins searching in the other direction, searching twice as far before returning to the final point on the other side to begin searching again there. This process is repeated, spending increasing amounts of time on alternate sides of the starting point, until a fringe is found. The fringe is detected by testing for spatial intensity variations on a CCD camera, which observes the recombined light. The control software has provisions for remembering the last location at which fringes were observed, relative to the home switch, and starting a new fringe search from that position.

3. Voice Coil Modulator

The precision with which we are able to position the delay line is limited primarily by backlash to approximately 1 μm. This precision is not sufficient to maintain good fringe visibility nor to suppress adequately a number of parametric error sources that affect the phase measurement; in fact our requirement is that the rms deviations of the optical path length from the central white light fringe not exceed 10 nm.

The right arm of the TA contains a voice coil modulator that provides fine path length control. The voice coil modulator consists of two nearly identical actuators mounted back-to-back for momentum compensation (see Figure 3). Each actuator consists of a cylindrical housing within which a hollow cylindrical rod supports a flat mirror on one end and the armature of a voice coil on the other.

A pair of diaphragm flexures that permit longitudinal motion while constraining transverse displacement and rotation supports the rod. The flexures are 1/16" thick sheet aluminum disks with cut-outs to relieve radial strain (see Figure 4); they are fabricated by electro-discharge machining. Each coil protrudes part way into a permanent magnet that generates a radial magnetic field. These magnets are mounted to the interior of their respective enclosures.

An earlier diaphragm design which did not have the curved cutouts shown in Figure 4 showed evidence of "oil-canning" which could be felt by hand and which also was evident when the resonant frequency of the modulator was measured: two different frequencies were measured, corresponding to two stable positions of the moving part of the modulator. Although such oil-canning is evidence of non-linearity in the flexure, it need not compromise the performance of the modulator, since the amplitude of the required motion is quite small. The radial strain associated with the oil-canning effect, however, was suspected of increasing the sensitivity of the modulator's dynamical properties to changes in temperature and externally applied stresses.

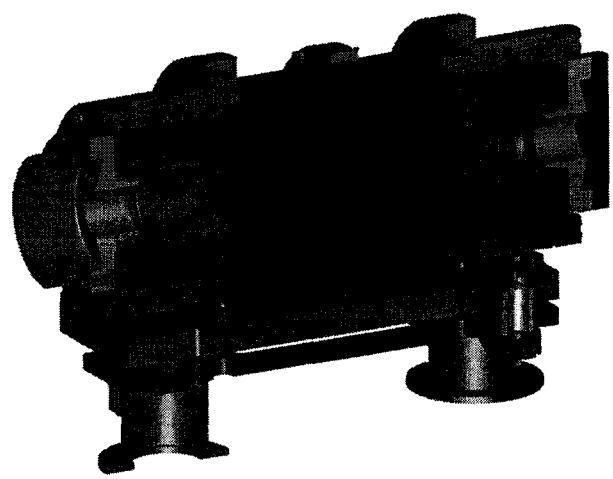

Figure 3 - Voice Coil Modulator

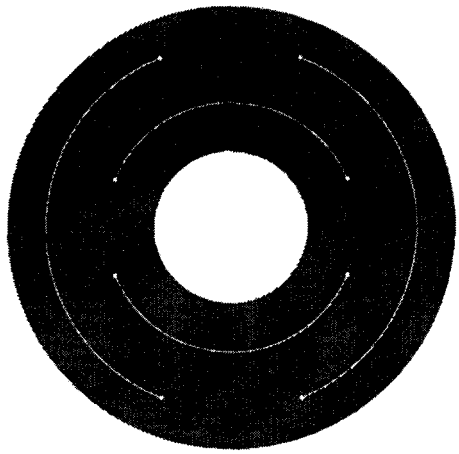

Figure 4 - Diaphragm Flexure

The voice coil modulator is also used to impose a path length modulation that is then used by the fringe-detection algorithms, both for the purpose of calculating the fringe phase, and for detecting the presence of interference fringes when in fringe-search mode.

The desired path-length modulation closely approximates a 25 Hz triangle wave that is rounded slightly at the points where the velocity of the mirror changes sign. This waveform has the property that the acceleration of the mirror vanishes during most of each period, ideally having a large value only during the short turn-around intervals at the extremes of the triangle. To achieve this displacement waveform, we have modeled the actuator as a simple harmonic oscillator, having only a spring force and a viscous damping force acting on the moving mass in addition to the external drive force from the voice coil. According to this model, the current supplied to the voice coil should vary linearly with time during the intervals over which the acceleration vanishes, since this current would have a constant component to counteract the viscous resistance to the constant velocity of the mirror, and a steadily changing component to counteract the steadily changing spring force. During the turn-arounds, the drive current should contain a large pulse that reverses the direction of motion of the mirror. A sample drive waveform is shown in Figure 5. Between the large pulses, the current changes linearly with time, as described above. This waveform is programmed into an arbitrary waveform generator (Stanford Research Systems model DS340). The waveform generator is triggered externally from a 25-Hz square wave generated by our VME system for synchronization. We have found that this algorithm is sufficiently good to achieve fairly easily a drive waveform that deviates from a constant velocity path by less than 1%.

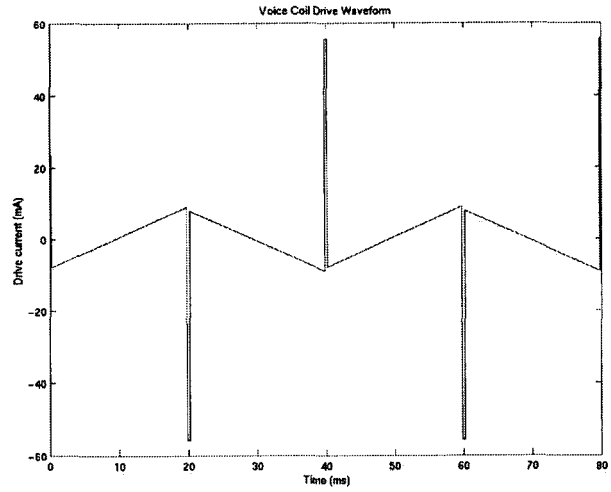

Figure 5 - Voice Coil Drive Waveform for Triangle Modulation

Because of the simple form of the drive waveform, it can be represented with three adjustable parameters (the pulse area, the spring constant, and the amount of viscous damping), and our approach has been to adjust these three parameters iteratively until the desired displacement waveform is achieved. Re-adjustment of these parameters is generally required when the modulation frequency is changed, when the mechanical properties of the modulator are changed, or when the output impedance of the drive circuitry is changed. The output impedance of the drive circuitry affects the drive waveform because viscous damping in the modulator is primarily due to back-EMF currents.

Figure 6 shows (in blue) the measured path length modulation when the voice coil modulator is driven by the waveform in Figure 5, and (in red) the modulation of the interference fringe that results.

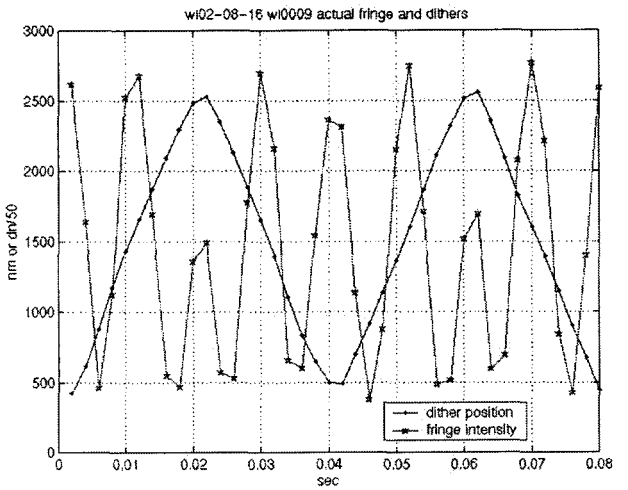

Figure 6 - Path Length Modulation and Fringe Intensity

For some tests it is desirable that the amplitude of the modulation be constant over time. Variations in the amplitude of the modulation have the effect of changing the gain of the fringe phase detection algorithm; such gain variations can couple with residual fluctuations in the fringe phase to produce a fringe phase measurement error. Our requirement is that the amplitude of the modulation be constant, when averaged over periods of 10 seconds, to within one part in 10^4. A number of factors can compromise the amplitude stability of the modulation. These include temperature fluctuations causing the voice coil impedance to change, changes in the mechanical properties of the actuator flexures and their mounts, and changes in the amplitude of the electrical drive signal. In practice the most important effect by far is that of mechanical vibrations. Such vibrations disturb the entire optical table on which the TA is mounted. To the extent that this disturbance is common to all of the optical components on the table, there is no net effect on the path difference between the two arms of the interferometer. The voice coil modulator mirror, however, being mounted on compliant flexures, tends to move less than a rigidly mounted optical component, and this introduces a path difference modulation.

We have constructed an active amplitude control loop to stabilize the amplitude of the modulation. The laser metrology system is used to measure the optical path delay; this signal is fed into a software lock-in amplifier that detects the amplitude of the modulation. A voltage controlled variable gain amplifier is then driven by the software via a digital to analog converter to maintain a constant amplitude.

4. Dither For Cyclic Error Suppression

As mentioned above, a laser metrology system is used to measure the optical path delays in both arms of the TA and in both parts of the IIPS. A substantial part of the error in this metrology system is "cyclic" in nature, i.e., the error is periodic as a function of the measured optical path length. Such errors can be caused, for example, by spurious reflections that can deliver to the photodetector optical power that has traveled a different path from the one being measured, and which may not change when some optical elements in the main path are moved. They can also be caused by cross-talk between the electrical outputs of two metrology interferometers where a relative-phase-dependent error can be introduced into one metrology system by another. In the MAM testbed, cyclic errors have been measured to have an amplitude of 300 pm, too large by a factor of approximately 10 given our current accuracy targets. We are able to suppress this error by modulating the optical path by precisely one wavelength of the metrology laser and averaging the measured path length over an integral number of modulation cycles. We modulate both arms of both the IIPS and the TA by the same amounts and in a synchronized fashion, so as to introduce zero net modulation to the starlight path. In this way, we achieve error suppression without affecting other operations. This modulation is applied to the fast steering mirrors. The fast steering mirrors are 2" mirrors mounted on PZT tripods from Physik Instrumente, (part number S-316.10). They are intended, as their name suggests, to control the alignment of the interferometer, so that the simulated starlight wave fronts interfering at the beam combiner will be parallel. The fact that each FSM contains three PZT actuators, however, implies that the piston degree of freedom can be actuated independently of elevation and azimuth, and we have implemented a matrix coordinate transformation in software which allows us to control these three degrees of freedom independently. An added benefit of using one mirror for both alignment control and path length modulation is that misalignment introduced by the optical path modulation coupled with non-linearities in the PZT actuators or imperfections in the coordinate transformation is largely suppressed, at the point of introduction, by the alignment control loop. The modulation used to suppress cyclic errors is triangular in shape, with a frequency of 0.2 Hz.

5. Real-Time Computer Control

Most of the functions of the interferometer are controlled from a pair of VME crates, each hosting a single-board PowerPC-based computer running the VxWorks real-time operating system. Using a mix of off-the-shelf and custom interface cards, the computer senses the optical path as measured by the metrology interferometer, the simulated star light fringe observed on the CCD camera, signals from pointing sensors, and readings from motor encoders. A software package created at JPL for the control of stellar interferometers [9] is used to process these inputs and send

commands to the actuators described above, in addition to a number of others. Top-level control of the real-time computer is effected by the operator using a CORBA-based protocol to issue commands from networked computers running Linux, either using simple command-line applications or using a Java GUI, to the real-time computers running VxWorks. Data is streamed via CORBA connections to the Linux workstations, where it is displayed on the GUI and archived for post-processing.

6. CONCLUSION

Using three different varieties of actuator in the MAM testbed, we have created a path length control and modulation system which provides the necessary combination of coarse path length control, fine path length control, and path length modulation at two frequencies and at different points along the star light path in the interferometer. The system has proven to be reliable, effective, and convenient to operate and maintain.

ACKNOWLEDGMENTS

The research described in this publication was performed at the Jet Propulsion Laboratory of the California Institute of Technology, under contract with the National Aeronautics and Space Administration. The results presented are the fruits of an entire team.

REFERENCES

[1] B. E. Hines, C. E. Bell, R. Goullioud, R. Spero, G. W. Neat, T. J. Shen, and E. E. Bloemhof, "Micro-arcsecond metrology (MAM) testbed overview," *SPIE conference on Interferometry in Space*, vol. 4852, 2002.

[2] R. Goullioud, B. E. Hines, C. E. Bell, E. E. Bloemhof and T. J. Shen, "SIM Astrometric Demonstration at the 150 picometer level using the MAM testbed," *IEEE Aerospace Conference*, Big Sky, MT, 2003.

[3] J. Marr, "Space Interferometry Mission (SIM) overview and current status," *SPIE conference on Interferometry in Space*, vol. 4852, 2002.

[4] Hines, B.E., "SIM system testbed III," *SPIE Conference on Interferometry in Optical Astronomy,* vol. 4006, pp. 859-870, 2002.

[5] B. Nemati, "External Metrology Truss Technology Demonstration (KITE)", SPIE Conference on Interferometry in Space, vol. 4852, 2002.

[6] D. B. Schaechter, et al., "Diffraction hardware testbed and model validation," *SPIE Conference on Interferometry in Space,* vol. 4852-51, 2002.

[7] Jay Ambrose, Ab Hashemi, Julie Schneider, Dave Stubbs, Kim Aaron, Michael Shao, and Tom VanZandt "Measurement and Prediction of Temperature Distributions in Optical Elements in the mK Regime," *IMECE 2000,* HTD-Vol.366–5, pp 135–145, November 2000.

[8] F. Zhao, R. Diaz, G. M. Kuan, N. Sigrist, Y. Beregovski, L. L. Ames, K. Dutta, "Internal metrology beam launcher development for the space interferometry mission," *SPIE conference on Interferometry in Space*, vol. 4852, 2002.

[9] T. Lockhart, "RTC: A Distributed Real-Time Control System Toolkit," *SPIE conference on Advanced Telescope and Instrumentation Control*, vol. 4848, 2002.

BIOGRAPHIES

Martin Regehr *is a senior member of the technical staff at JPL. He has participated in the construction of several SIM testbeds, including System Testbed 3, the Metrology Gauge testbed, and MAM. He has a BASc from the University of Toronto and a Ph.D. from Caltech.*

Brad Hines *has been involved in the development of astronomical optical interferometers since 1986, starting with the Mark III Interferometer at Mt. Wilson. He was the software and electronics architect for the Palomar Testbed Interferometer, and is now the Chief Architect for the Space Interferometry Mission. He has also contributed to the development of the CHARA Array. His current acting assignment is as technical lead for SIM's MAM Testbed.*

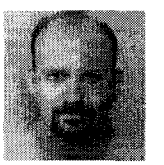

Buck Holmes *has a mechanical engineering degree from the University of California at Berkeley. He has performed the mechanical design, analysis, and assembly of several SIM related testbeds.*