Piezo-Electric Inlet System for Atmospheric Descent Probe

J.Simcic, C. Lee, A. Belousov & D. Nikolic
Planetary Surface Instruments Group,
Jet Propulsion Laboratory,
California Institute of Technology,
Pasadena, CA

International Planetary Probe Workshop 2019, Oxford, UK, July 8–12, 2019

© 2019 California Institute of Technology. Government sponsorship through NNH16ZDA001N-PICASSO acknowledged.

OVERVIEW

1.) Our instrument
2.) Atmospheric descent
3.) State of the art inlet systems
4.) First attempt
5.) Piezo Valve - history, schematics
6.) Piezo – theory of operation
7.) Piezo – package
8.) Piezo – testing & results
9.) Piezo – what's next

INSTRUMENT OVERVIEW

- QITMS* base pressure high 10^{-11} torr
- Operates without He buffer gas
- Different modes of operation (dynamic, static, resonant ejection)
- S.A.M** operating pressure ~5×10^{-9} torr
- S.A.M. operating sensitivity 5×10^{12} cnts /torr/sec (dynamic)
- Inlet = fussed silica tube (single)
- Allows for MCA every 2 sec

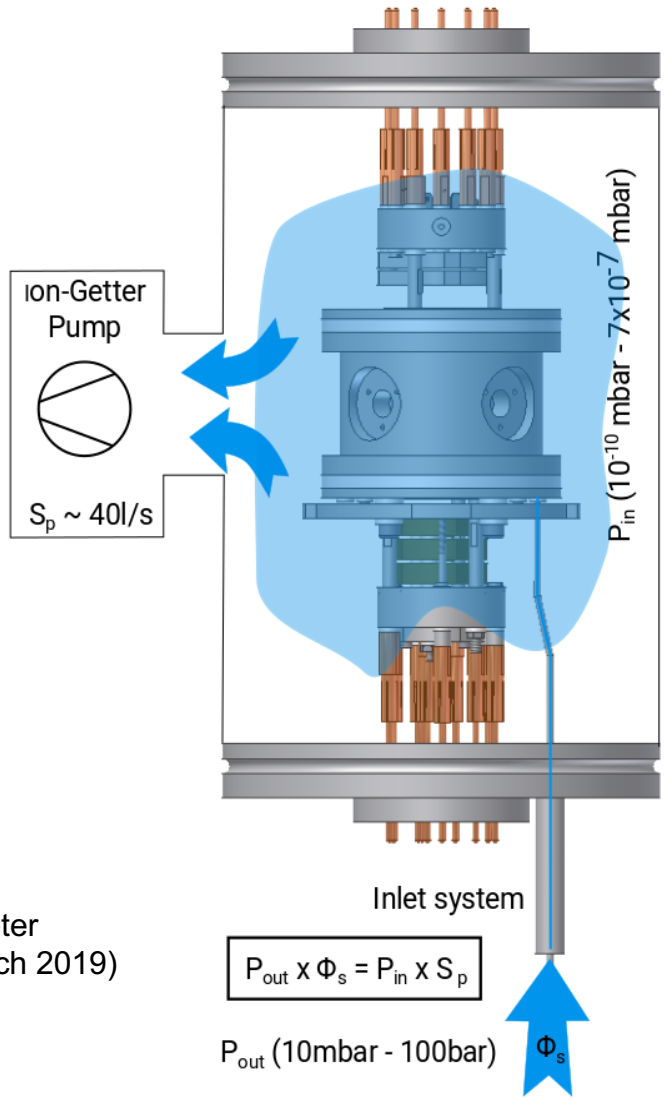

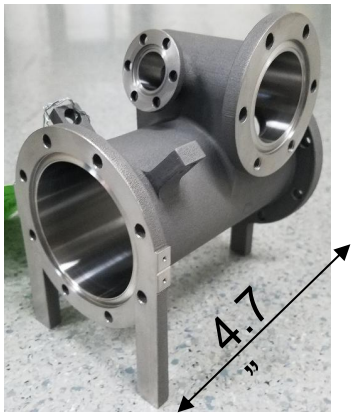

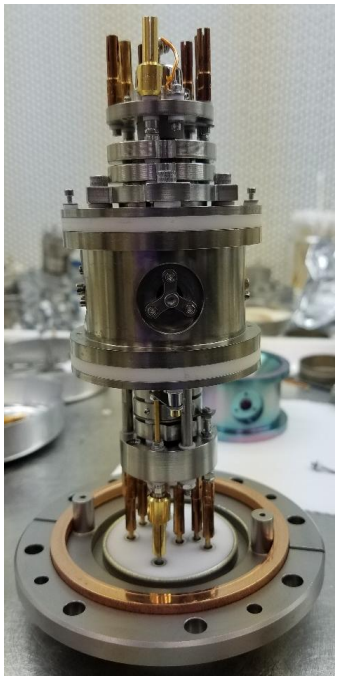

- *QITMS = Quadrupole Ion Trap Mass Spectrometer
- **S.A.M. = Spacecraft Atmosphere Monitor (launch 2019)

ATMOSPHERIC DESCENT

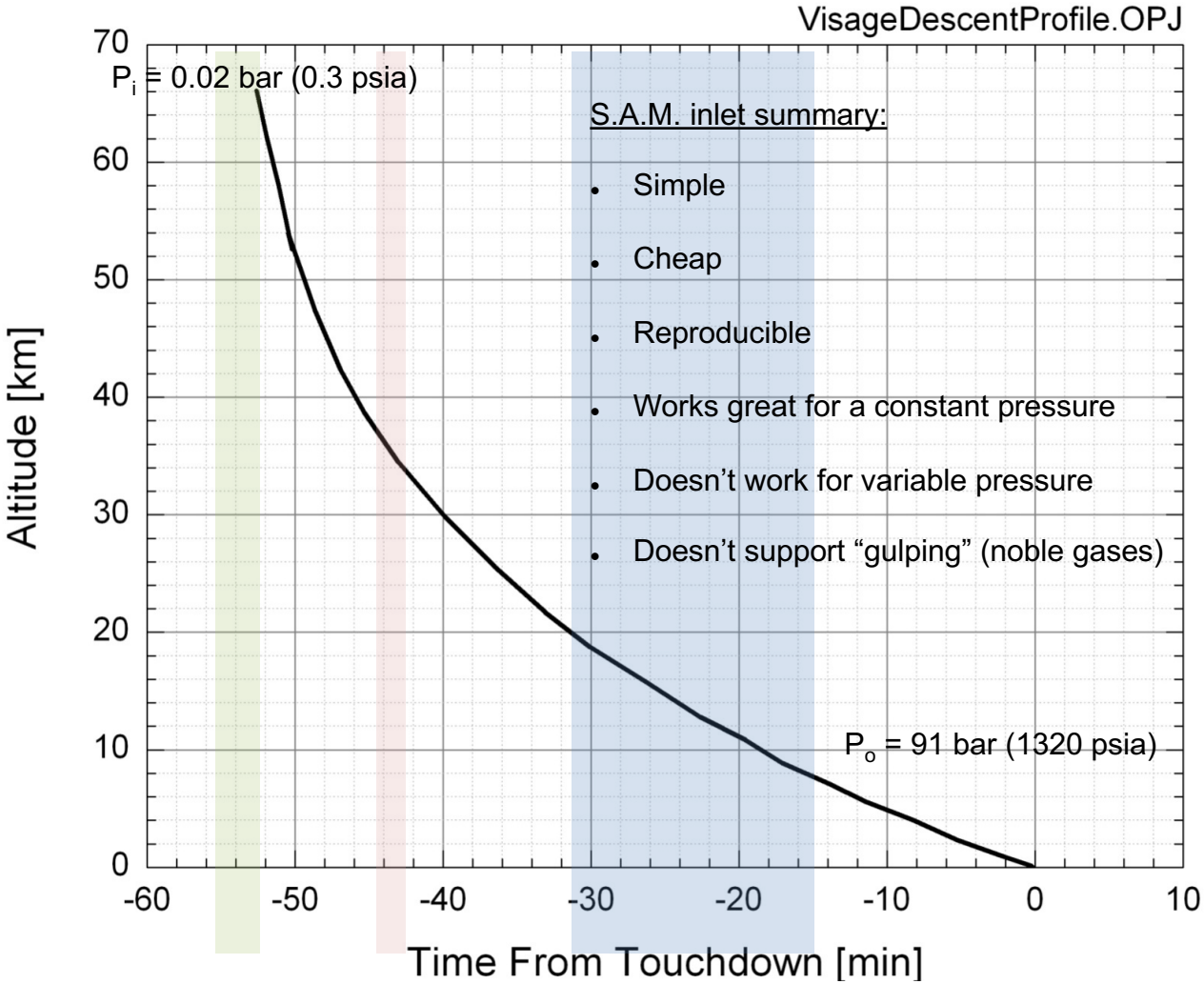

STATE OF THE ART

Glass capillaries + Valves

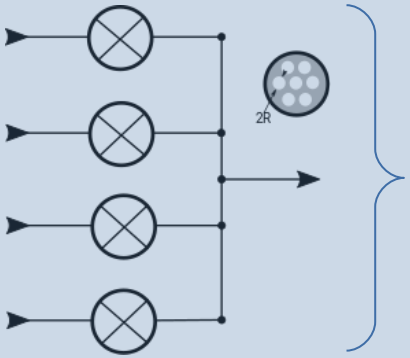

Galileo (Jupiter): 0.15-20bar, ~60 min
Huygens Probe (Titan): 0.003-1.5bar, 170km-0
Phoenix (Mars): 6mbar, surface

Pioneer (Venus): 0.1-100bar, ~60min

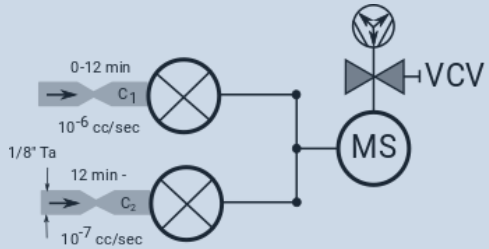

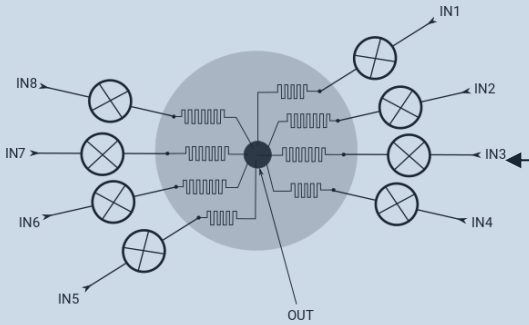

Goddard microleak: 1-100 bar (200psi with Mindrum), MEMS

Piezoelectric-pulsed

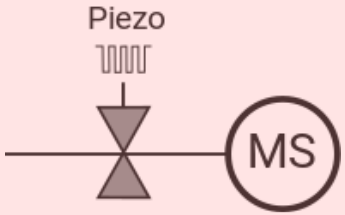

Venera 11/12 (Venus): 23km-2km

Lab standard

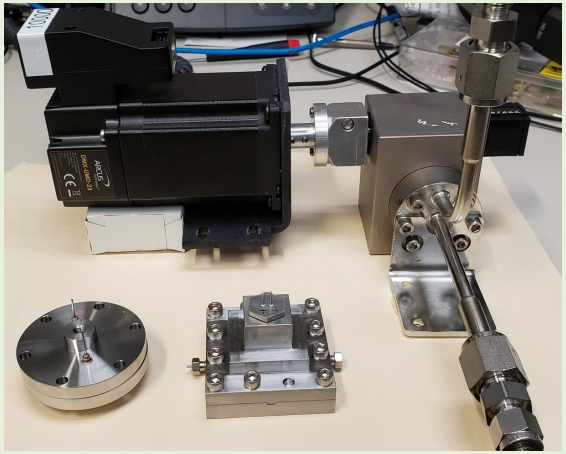

FIRST ATTEMPT

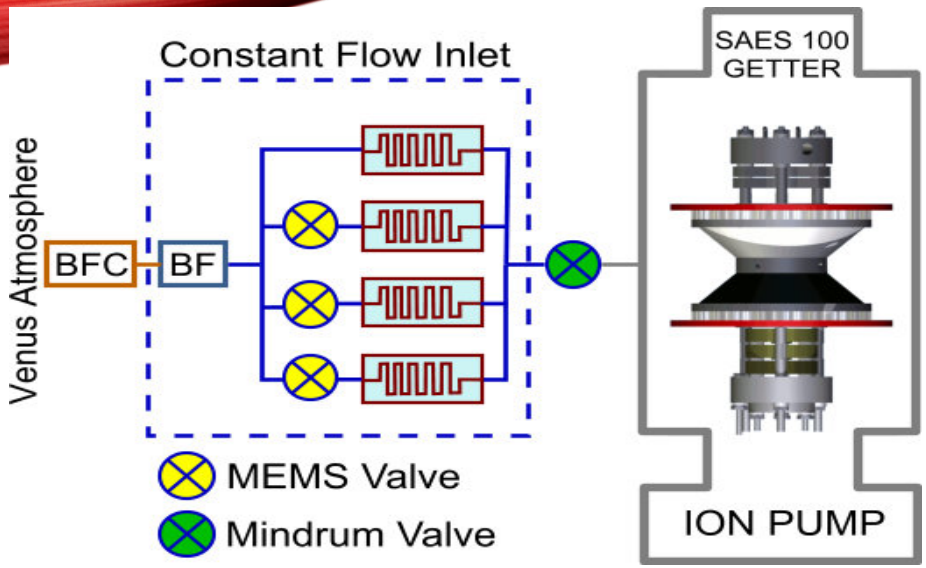

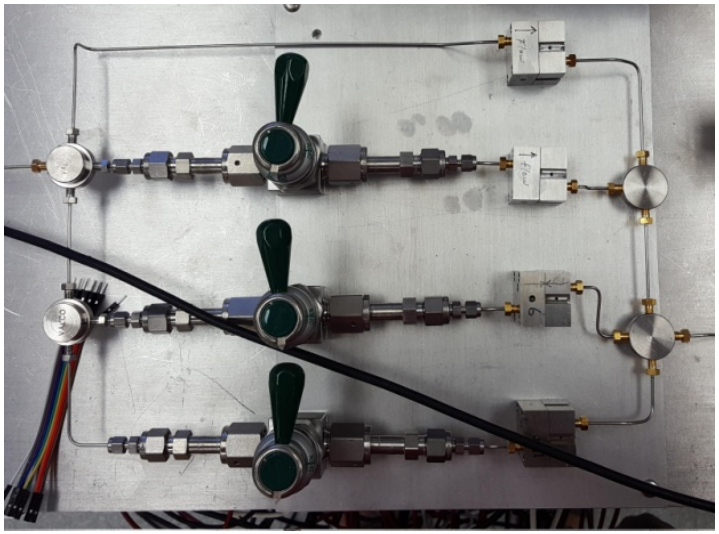

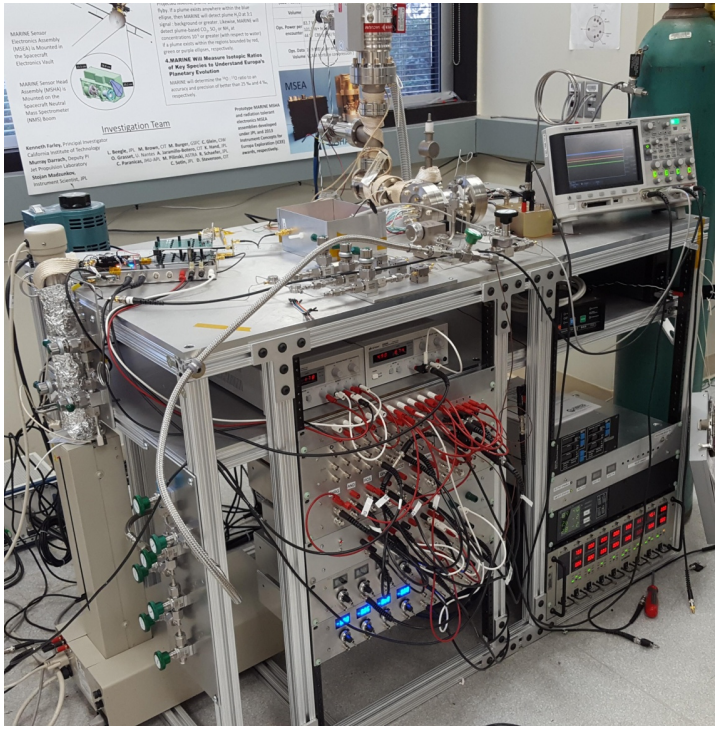

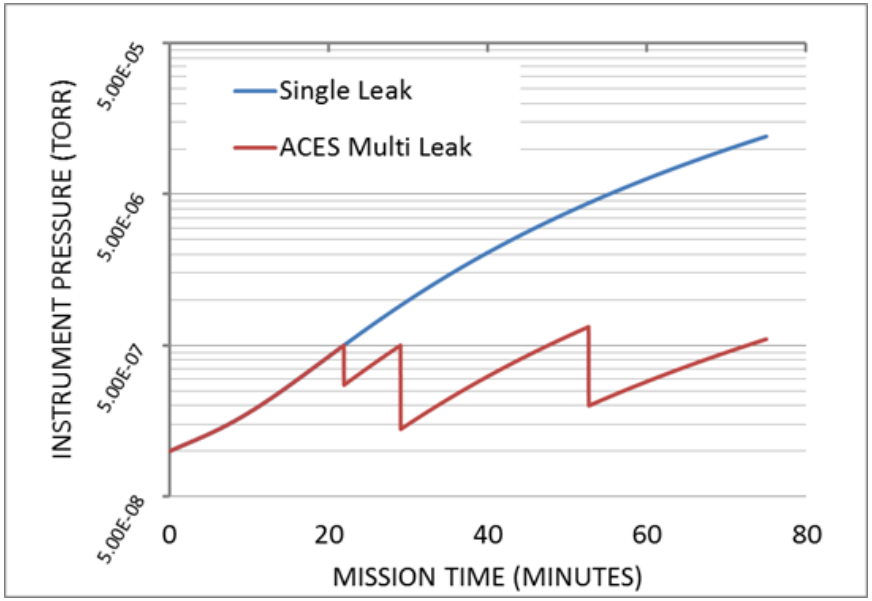

PIEZOELECTRIC VALVE -GENERAL INFO

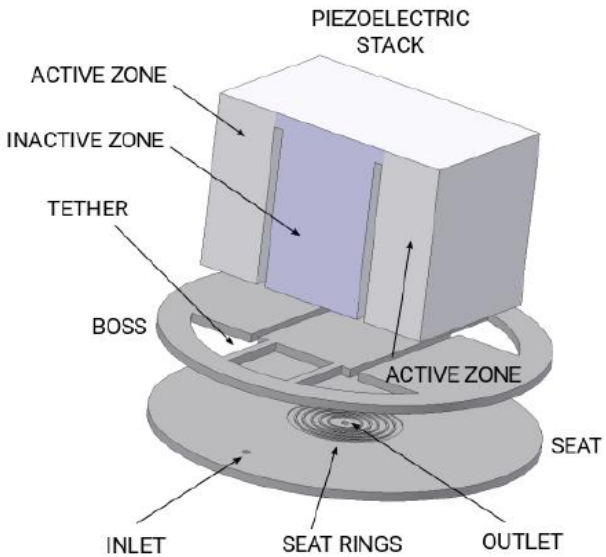

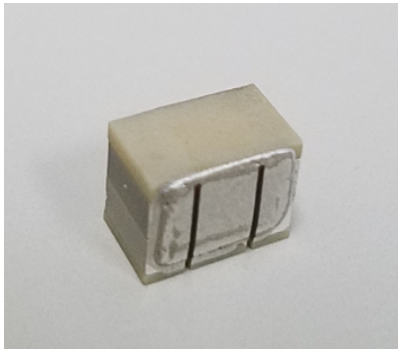

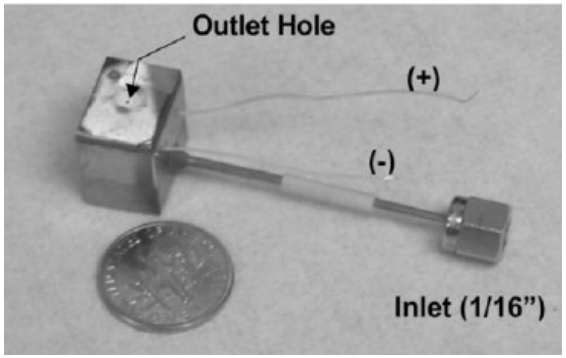

PZT properties	Specifications
Max Voltage	+60V
Min Voltage	-10V
Displacements	+5um @ +60V -1um @ -10V
Blocking Force	1000N
Capacitance	1700nF
Curie Temp	235 ^{o}C
Max op. Temp	125 ^{o}C

Developed at JPL 12 years ago for high-pressure gas micropropulsion applications

- Measured He leak rates of 1.67×10^{-6} mbar l/s @ 55 bar in its "normally closed" position.
- Tested up to pressure difference of 69 bar (maximum allowed pressure of the test rig)
- Could operate up to 125 ^{o}C.
- Pulsed (1kHz) or static operation (8mW of power when fully opened)

PIEZOELECTRIC VALVE - PRINCIPLE OF OPERATION

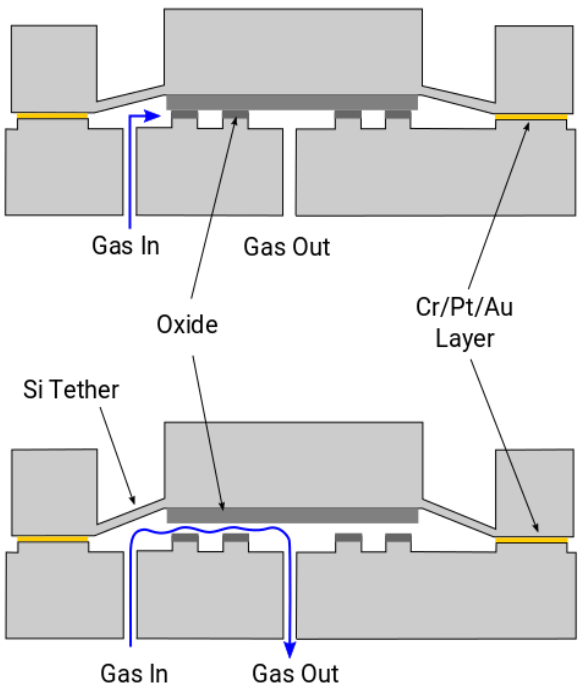

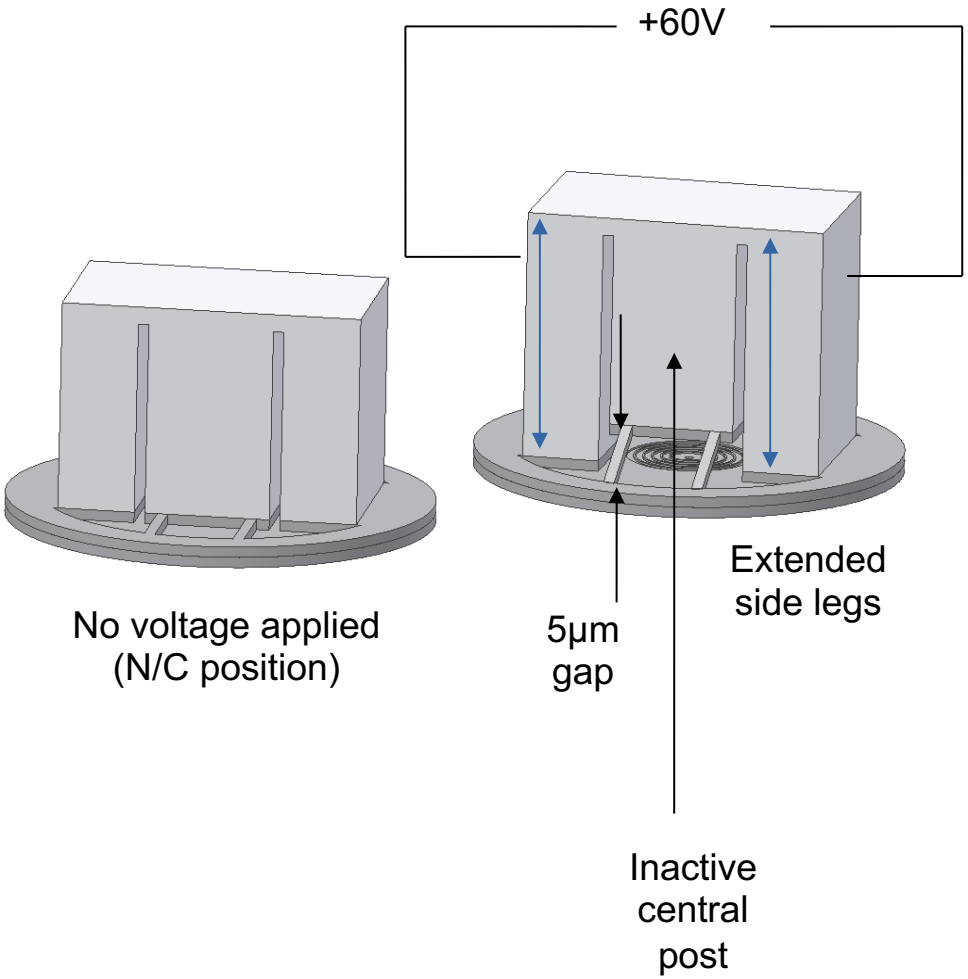

PIEZOELECTRIC VALVE - PACKAGE #1

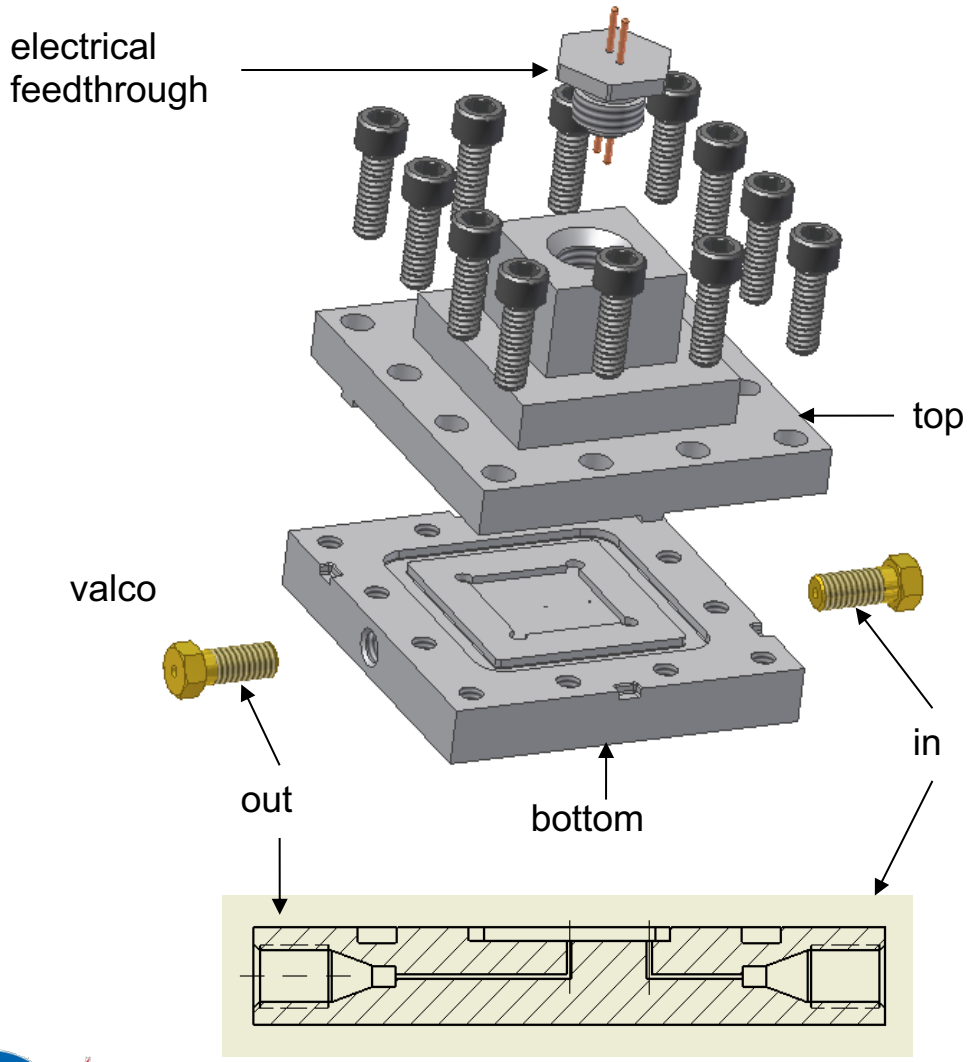

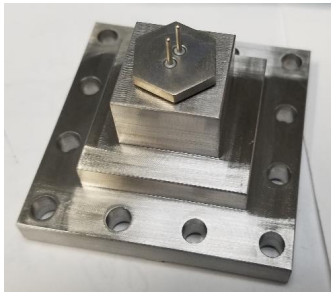

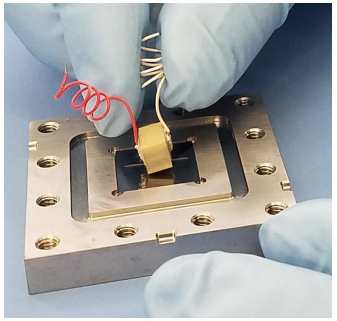

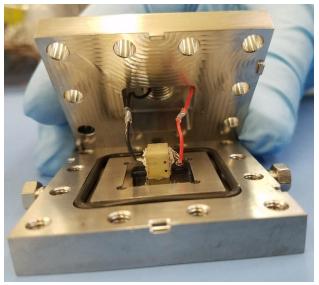

PIEZOELECTRIC VALVE - PACKAGE #2

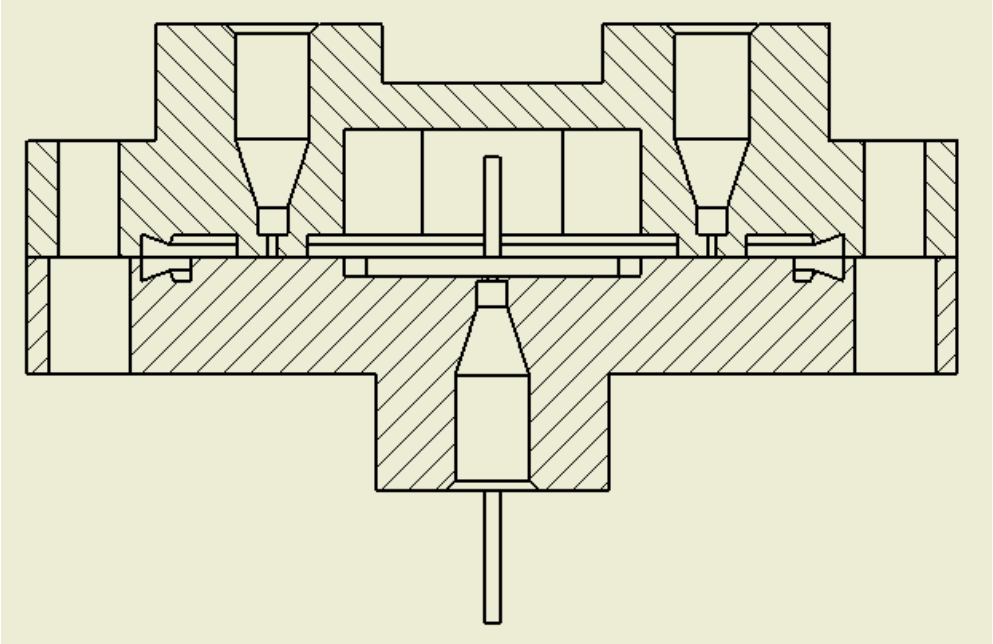

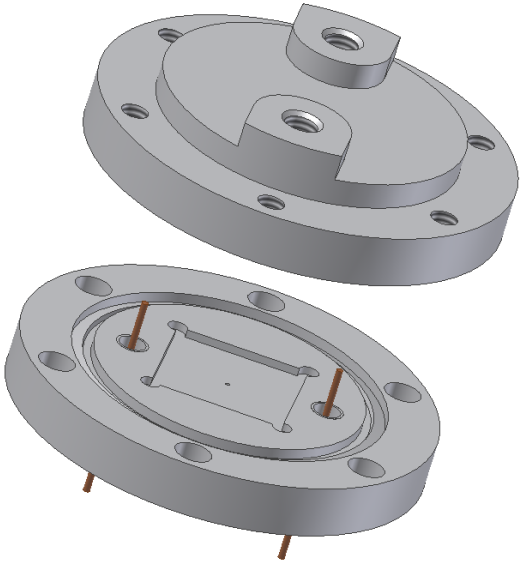

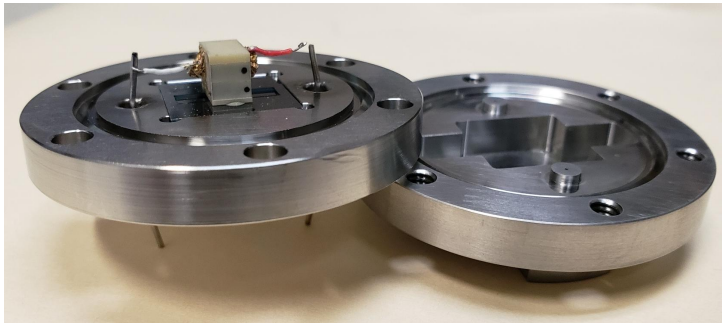

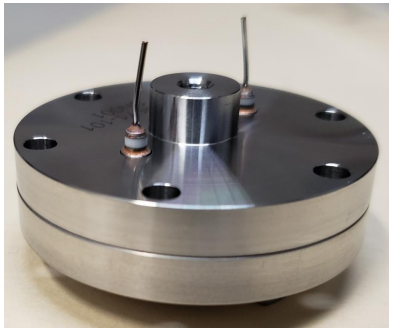

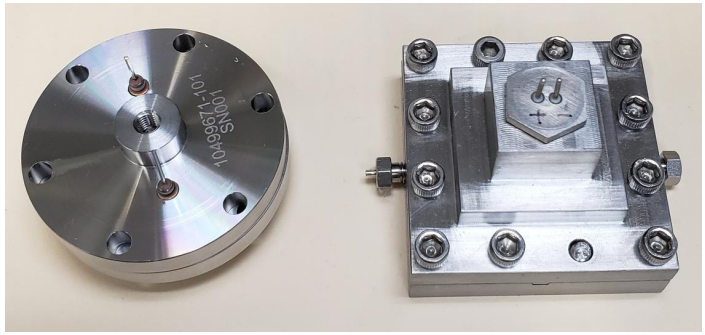

PIEZOELECTRIC VALVE - PACKAGE #3

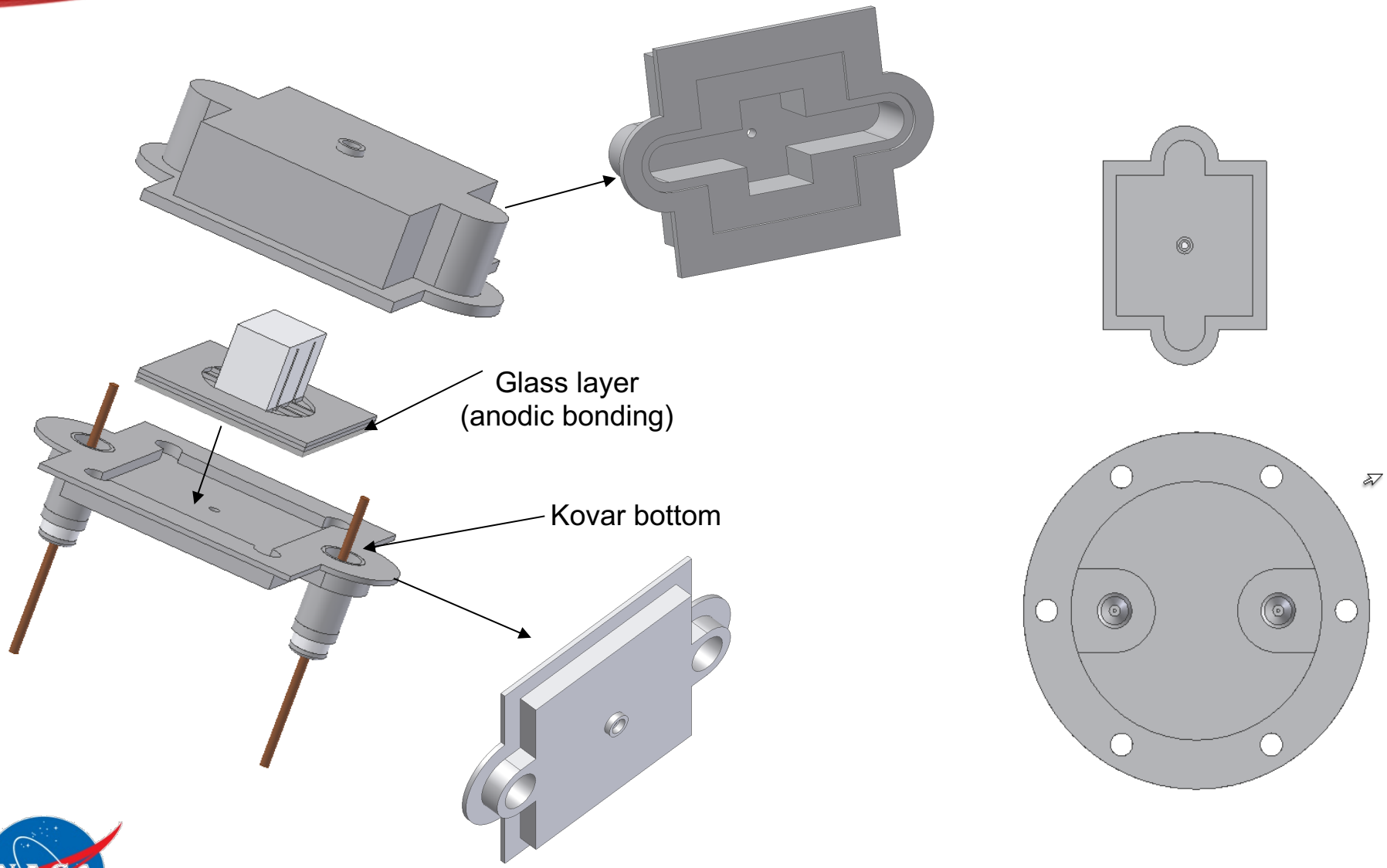

PIEZOELECTRIC VALVE - TESTING

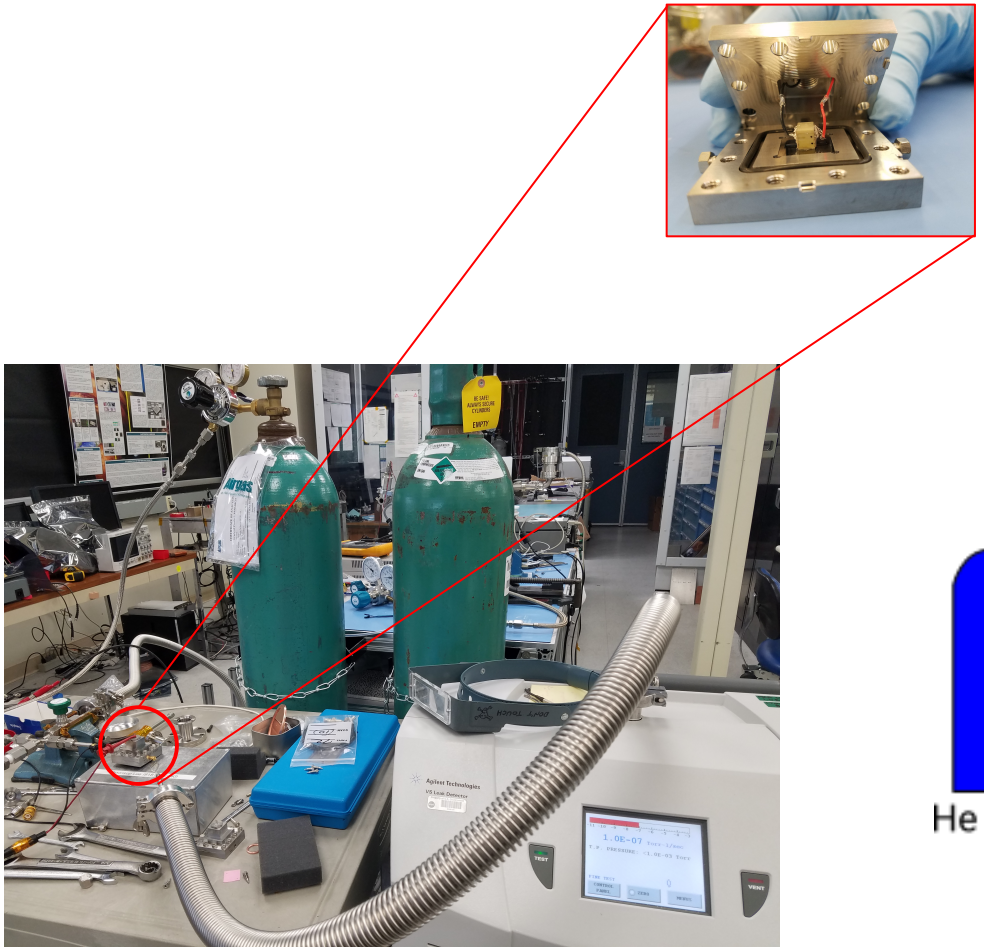

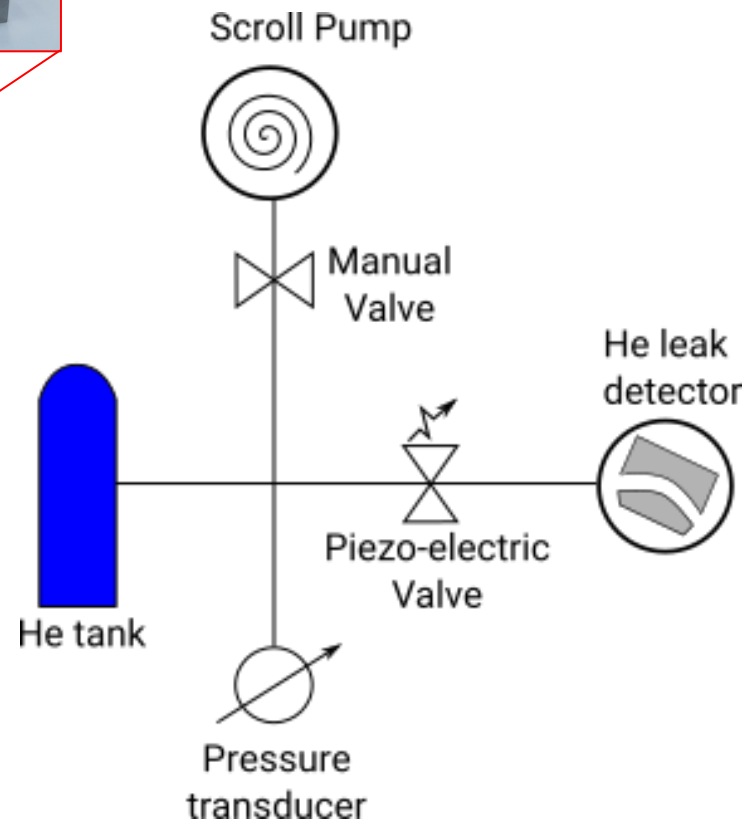

PIEZOELECTRIC VALVE - QITMS STATION

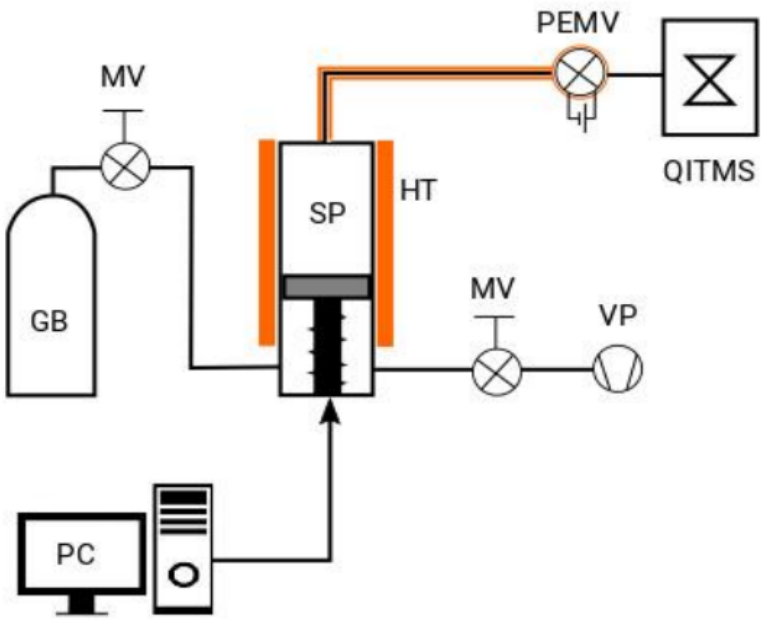

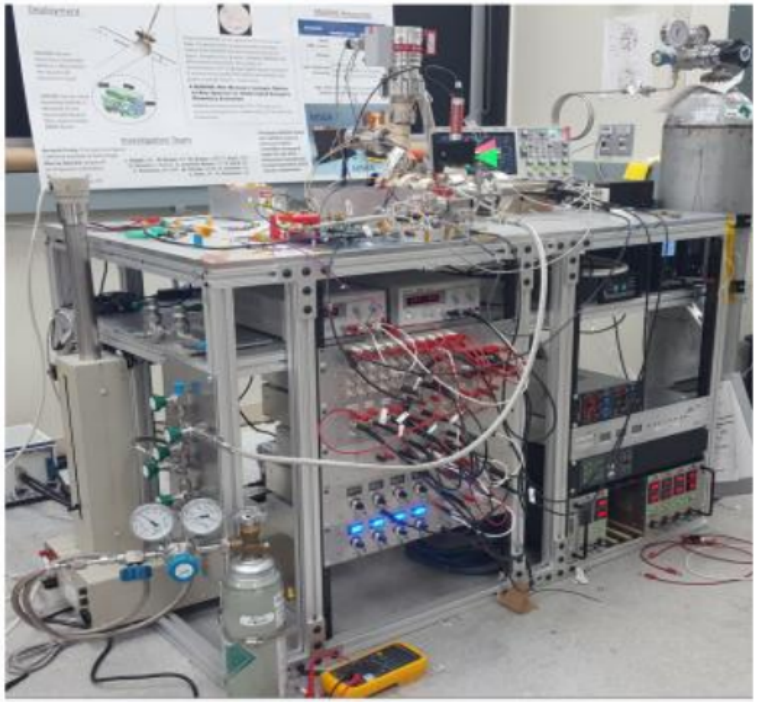

PIEZOELECTRIC VALVE - RESULTS

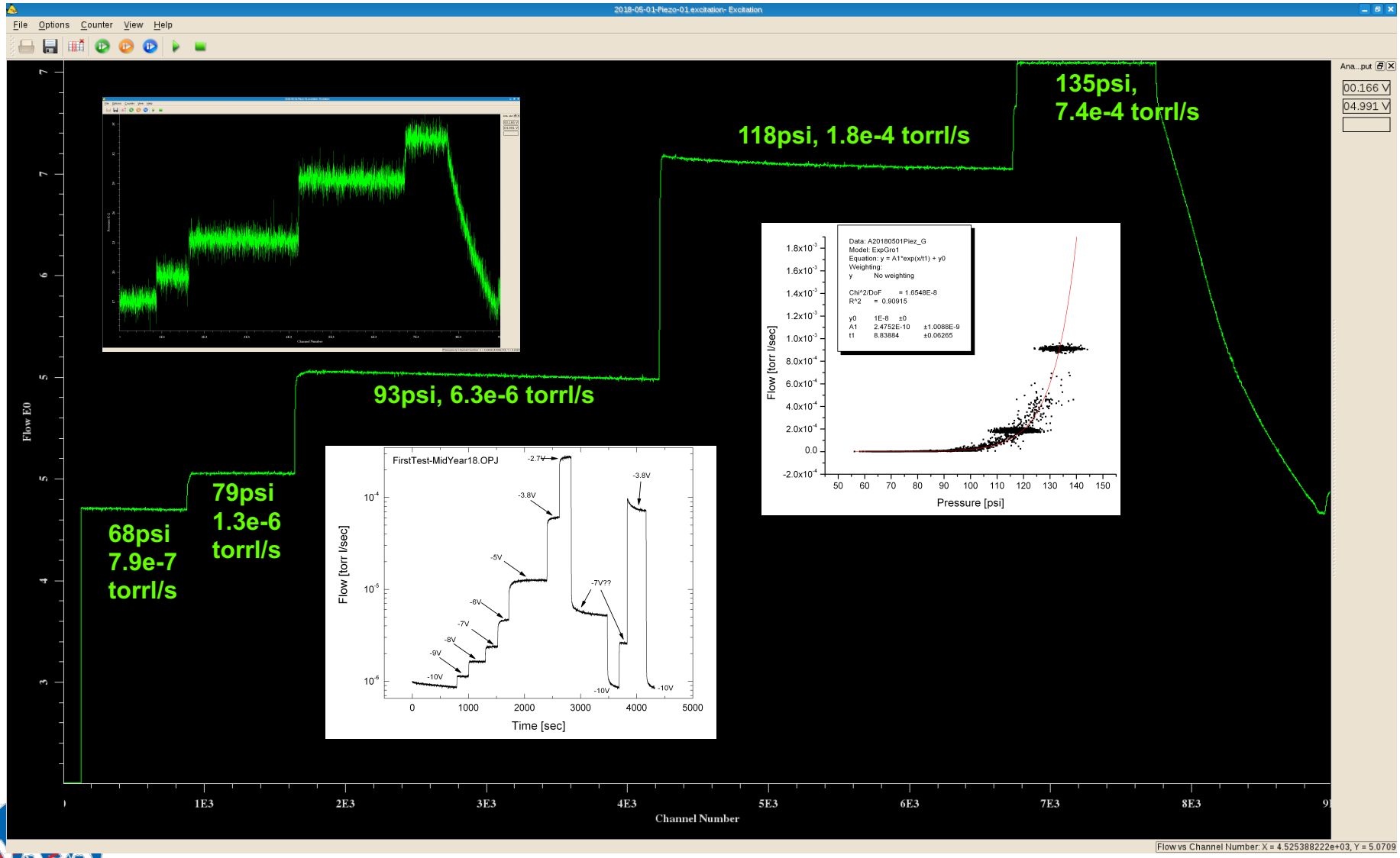

PIEZOELECTRIC VALVE - CURRENT AFFAIRS

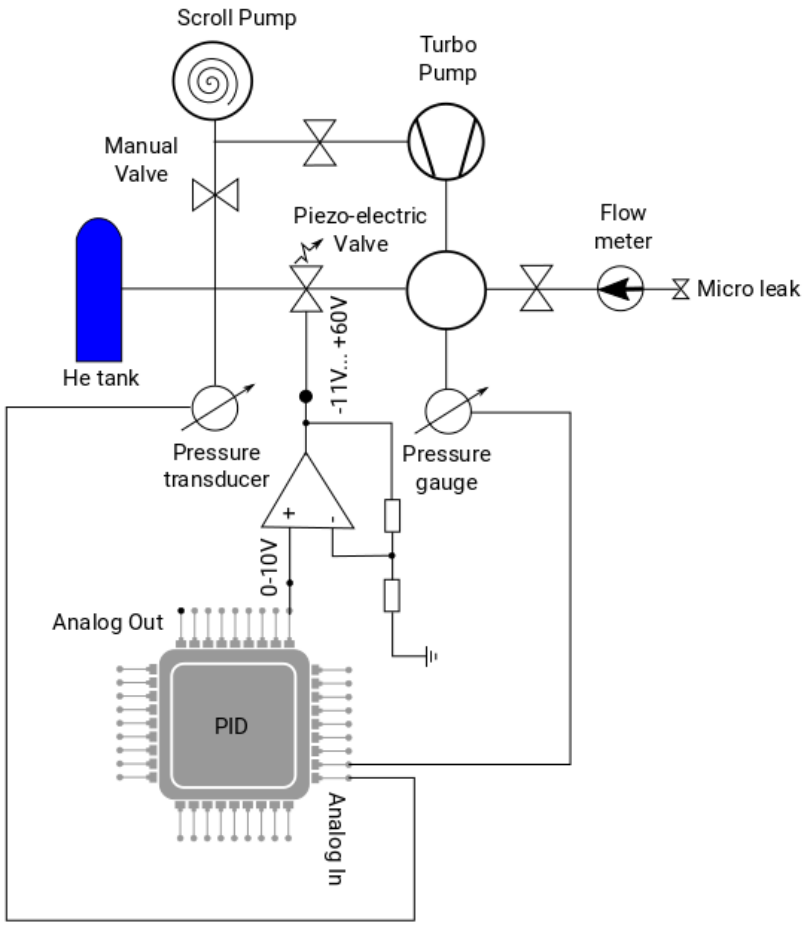

NEW TEST RIG: Characterization and PID control

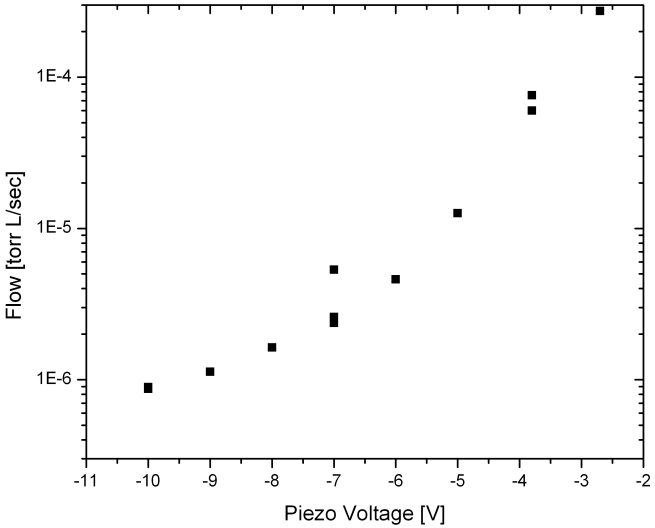

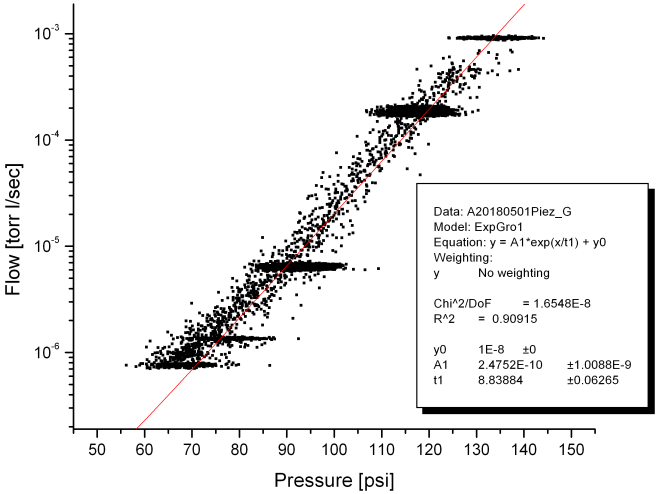

PIEZOELECTRIC VALVE - WHAT'S NEXT

- Fabricate more valves & test
- Eliminate epoxy by direct PZT to Si bonding
- Lower the leak rates (see below)

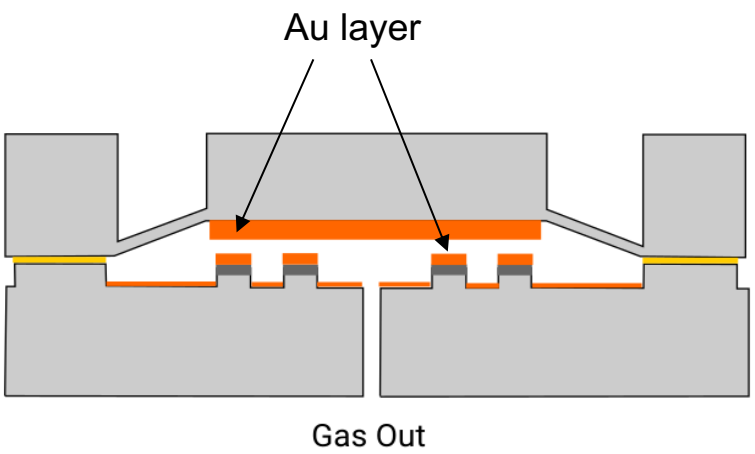

THANK YOU FOR YOUR KIND ATTENTION