Maintenance-optimized Modular Robotic Concepts for Planetary Surface ISRU Excavators

A Scott Howe
Jet Propulsion Laboratory
California Institute of Technology
4800 Oak Grove Dr.
Pasadena, CA 91109
a.scott.howe@jpl.nasa.gov

Brian H Wilcox
Jet Propulsion Laboratory
California Institute of Technology
4800 Oak Grove Dr.
Pasadena, CA 91109
brian.h.wilcox@jpl.nasa.gov

Hari Nayar
Jet Propulsion Laboratory
California Institute of Technology
4800 Oak Grove Dr.
Pasadena, CA 91109
hdnayar@jpl.nasa.gov

Robert P Mueller
NASA Kennedy Space Center
Mail Stop: UB-E
Kennedy Space Center, FL 32899
rob.mueller@nasa.gov

Jason M Schuler
NASA Kennedy Space Center
Mail Stop: UB-E
Kennedy Space Center, FL 32899
jason.m.schuler@nasa.gov

Abstract—Modular robotic concepts are identified and evaluated over the design and operations/maintenance lifecycle for autonomous Lunar, Mars, and partial gravity planetary surface excavation and in-situ earthworks equipment. In-Situ Resource Utilization (ISRU) is the exploitation of available resources at the site of a landed spacecraft on the surface of another planetary body. It is intended that this ISRU excavator concept be capable of material extraction from native regolith, and will be able to operate in a variety of planetary surface environments after initial shake-down on the moon. Using heritage from highly multi-functional, reconfigurable robotic systems like the All-Terrain Hex-Limbed Extra-Terrestrial Explorer (ATHLETE), Regolith Advanced Surface Systems Operations Robot (RASSOR), and Mars exploration rovers, we propose a flexible maintenance-optimized mobility platform concept with quick-connect/disconnect features for robotically swappable excavation implements. Dust tolerant torque transmission, power & data docking, thermal fluid connectors, and modular avionics and instrumentation will allow for autonomous swapping of tools, replacement of spares, and long-term maintenance of robotic excavators. The architecture includes modular tools for conventional excavate / scoop / haul / dump / process functions of a terrestrial mining operation on Earth, but also will have the capability to operate and robotically maintain itself without human intervention. The concepts described in this study will provide a suite of technologies, configurations, and operations ready for inclusion into a final flight-ready excavator system.

TABLE OF CONTENTS

1. INTRODUCTION 1
2. COMPONENT RELIABILITY 1
3. INTERFACES 3
4. MODULAR CONCEPTS 5
5. WORKING WITH HUMAN CREWS 11
6. SUMMARY AND CONCLUSIONS 13
ACKNOWLEDGEMENTS 13
REFERENCES 13
BIOGRAPHY 15

978-1-7821-2734-7/20/$31.00 ©2020 IEEE

1. INTRODUCTION

In-Situ Resource Utilization (ISRU) excavation systems will be evaluated by the time required for the system to generate its own mass in useful product, saving launch costs that would otherwise be spent in the delivery of that material. It will be highly advantageous for the ISRU system to eventually generate many times its own mass during its lifetime, thus reducing the mass required to be lifted out of Earth's gravity well. In order for ISRU to be accepted as a mission-critical element it must be highly reliable, even to a greater extent than any planetary surface system has been so far. Evaluating and identifying various approaches for efficient system design and maintenance are needed to reduce lifecycle costs.

Mining and excavation in a terrestrial setting are well-established industries, functioning with highly competitive business models that deliver product for profit. The quest for efficiency in these industries can inform the development of space ISRU systems. Planetary surface systems to date, including the various Mars rovers, have provided a body of data for reliability of systems in extreme space environments.

In previous work we described performance targets and figures of merit for an ISRU robotic excavator system [1]. In this paper, we focus on maintainability of surface robotic systems, to enable an excavation system to function and deliver product indefinitely, provided that energy and a steady supply of spare components can be delivered when needed.

2. COMPONENT RELIABILITY

Terrestrial mining subsystem reliability has been extensively studied by industry through tens of thousands of hours of operations working toward equipment efficiency.

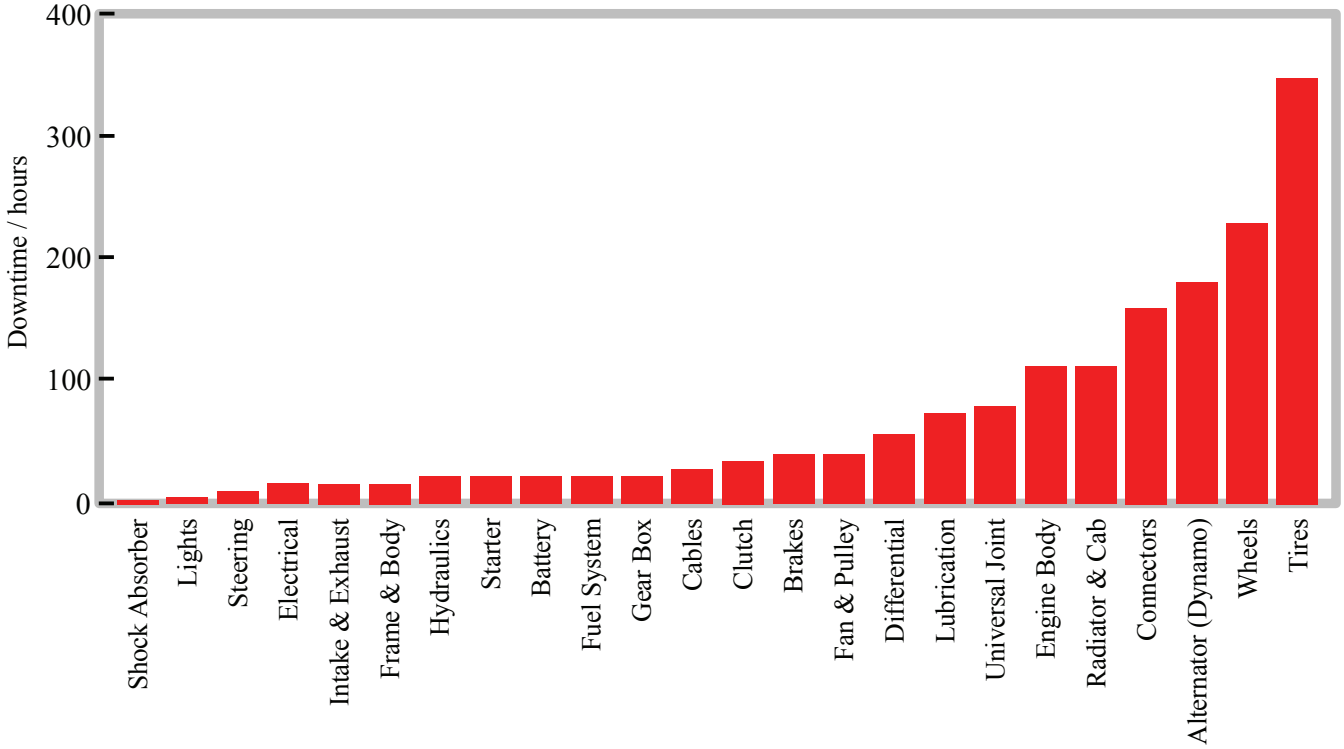

Figure 1: Terrestrial mining subsystem reliability showing statistical downtime of subsystems and components for 12,000 hours of vehicle operation [3]

Table 1: Performance of planetary surface mobility systems (proposed system shown in red)

	Lunokhod 1 (teleoperated) [4]	Apollo Lunar Rovers (astronaut driven) [5,6,7]			Lunokhod 2 (teleoperated) [8,9,10,11,12]	Yutu (teleoperated) [13,14]	Yutu 2 (teleoperated) [15]	Sojourner (supervised autonomy) [16,17]	Spirit (supervised autonomy) [18]	Opportunity (supervised autonomy) [19]	Curiosity (supervised autonomy) [20,21]	ISRU Excavation Autonomy Vehicle
		15	16	17								
Deployed Body	Moon	Moon			Moon	Moon	Moon	Mars	Mars	Mars	Mars	Moon
Mass (kg)	756	210			840	140	140	11.5	185	185	899	200
Mobility Operation Duration (months)	10	0.1	0.1	0.1	4	1.4	1	3	63	173	79.1	24
Primary Application	Mobility & Science	Mobility & Science			Mobility & Science	Mobility & Science	Mobility & Science	Mobility & Science	Mobility & Science	Mobility & Science	Mobility & Science	Excavation & Transport
Distance Traversed (km)	10.54	27.8	27.1	35.7	39	0.12	?	0.10	7.7	45.2	20	7,500
Average Distance Traversed (km/day)	0.035	9.2	9.0	11.9	0.32	0.0002	?	0.001	0.004	0.009	0.008	10.4
Power Source	Solar (day) Radioisotope Heat (night)	Primary Battery			Solar (day) Radioisotope Heat (night)	Solar (day) Radioisotope Heat (night)	Solar (day) Radioisotope Heat (night)	Solar, Battery & Radioisotope Heat	Solar & Recharged Battery	Solar & Recharged Battery	RTG & Recharged Battery	Recharged Battery
Assessed Failure Mode	Lost Contact	Abandoned after completing 3-day mission			Loss of cooling due to dust	Control circuit failure	?	Lost Contact	Stuck in soil	Dust storm occluded solar panels		

In terrestrial operations, it has been estimated that equipment maintenance costs range from 20-35% of mine operation costs, and 10% of production time is lost due to unplanned maintenance [2]. In one published case study, downtime was logged for subsystem and component maintenance [3], which can be an indicator of which components or subsystems will need greater attention to reduce downtime (Figure 1). Similarly, we have compiled data on the performance of planetary surface mobility systems, showing that an ISRU excavation system may need to perform orders of magnitude in greater distances to be covered, requiring a robust

approach to maintenance, resupply, and spare parts management (Table 1).

Table 2: System and subsystem Mean Time To Failure (MTTF) [22]

Power System	Qty	MTTF (hrs)
Battery	1	4761904.76
Battery Control Board	1	2500000.00
Mission Clock	1	10000000.00
Power Distribution Unit	1	588235.29
Power Control Unit	1	5263157.89
Shunt Limiter	1	87719.30
Electrical Heater	1	333333.33
Radioisotope Heater	1	73529.41
Thermal Switch	1	10526.32
Cumulative Failure		**7961.78**

Communications	Qty	MTTF (hrs)
Antenna Motor	1	156250.00
Antenna Motor	1	149253.73
Transceiver	1	33333.33
Temperature Sensor	1	90909.09
Electrical Heater	1	333333.33
Cumulative Failure		**17513.13**

Attitude Sensing	Qty	MTTF (hrs)
IMU	1	1098901.10
Sun Sensor	1	200000.00
Temperature Sensor	1	90909.09
Heater	1	333333.33
Cumulative Failure		**50226.02**

Avionics	Qty	MTTF (Hrs)
Processor	1	116279.07
Camera Board	1	76335.88
Motor Control Board	1	29411.76
Computer Backplane	1	222717.15
Temp Sensor	1	90909.09
Electrical Heater	1	333333.33
Radioisotope Heater	1	73529.41
Cumulative Failure		**11390.82**

Mobility Steer & Drive	Qty	MTTF (Hrs)
Drive motor	1	400000.00
Drive drivetrain	1	526315.79
Steering Motor	1	156250.00
Steering drivetrain	1	526315.79
Encoder	2	666666.67
Potentiometer	2	100000.00
Temp Sensor	1	90909.09
Electrical Heater	1	333333.33
Cumulative Failure		**20120.72**

Mobility - Drive only	Qty	MTTF (Hrs)
Drive motor	1	400000.00
Drive drivetrain	1	526315.79
Encoder	1	666666.67
Potentiometer	1	100000.00
Temp Sensor	1	90909.09
Electrical Heater	1	333333.33
Cumulative Failure		**33444.82**

Mobile robot subsystem Mean Time To Failure (MTTF) can be calculated [22] to determine how to determine modularity of systems (Table 2). For example, MTTF rates from NASA Jet propulsion Laboratory (JPL) rovers, with no redundancy and assuming failure of any component will cause failure of the (2-drive wheel, 2-steered & driven wheel) system result in a cumulative single mobility system MTTF of 2,224 hours.

ISRU excavation and transportation applications, which have not been done in space before, will likely impose larger loads and wear on mobility systems. We assume wear and tear will triple, reducing the hours by two-thirds, resulting in a cumulative single mobility system MTTF of 741 hours.

Under conventional wisdom, assuming ISRU excavation operations and mission duration of two years and a duty cycle of 0.5 [1, p5] for a total of 8,760 hours could mean that 12 vehicles would need to be held as backup for each operational vehicle, which would not be practical. However, with repair capability, the following spares would be adequate for two years of ISRU operations:

- 4 power systems
- 3 mobility steer & drive subsystems
- 2 mobility drive subsystems
- 3 avionics subsystems
- 2 communications subsystems
- 1 attitude sensing subsystem

It would be advantageous to design modularity into each excavator robot such that power, mobility steering, mobility drive, avionics, communications, and attitude sensing subsystems, among others, can be field-swappable with new spares, or scavenged off inoperative vehicles. Such modularity will require dust tolerant mechanical, torque, power, and data transmission docking interfaces, as well as robotic implements or tools that allow delivery, grappling, manipulation, transport, and precision positioning of swappable modules and parts.

3. INTERFACES

A considerable amount of research has been done regarding quick connect/disconnects for extreme environments, including dust tolerant power & data connectors for military field operations and corrosion tolerant connectors used in undersea cabling and the oil industry (a simple online search will yield many examples).

Quick connect/disconnect solutions for mechanical, torque, liquid, power, and data in space environments will require dust tolerance to abrasive lunar fines, and depending on the environment (such as Venus or Titan) may need corrosion, pressure, and temperature resistance as well. Initial hardware examples developed by NASA Kennedy Space Center SwampWorks include the Dust Tolerant Automated Umbilical (DTAU) for attaching excavation and other implements to rovers [23]. For our current design, we have assumed that a miniaturized version of the DTAU is implemented in a radially symmetric cross configuration

(Figure 2). In our connector, concentric circles will accommodate fluids, with data and power poles on each limb of the cross.

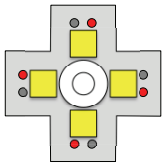

Figure 2: Radially symmetric miniaturized Dust Tolerant Automated Umbilical (DTAU). White concentric circles are placeholders for fluid, yellow for data, red & gray circles for power transmission

The radially symmetric miniaturized DTAU will be the basis of a mechanical clamp that will consist of male and female components that form a structural connection. Two male connector wings will enclose a cubical female component to close the connection (Figure 3, Figure 4).

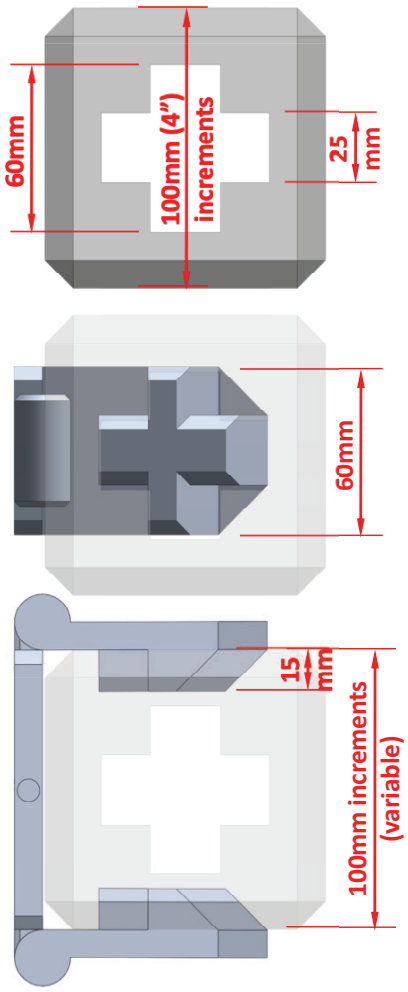

Figure 3: Modular hardware interface concept. Top: female connector. Middle: Male connector. Bottom: two male connectors engage female connector.

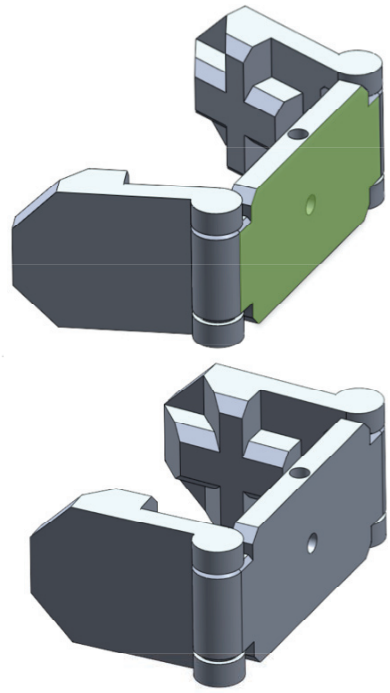

Figure 4: Modular interface clamp fixture. Top: two male connectors waiting to engage. Bottom: male connectors closed.

The radially symmetric cross connector will allow three different engagement configuration scenarios: vertically upward, horizontal, and vertical downwards (Figure 5).

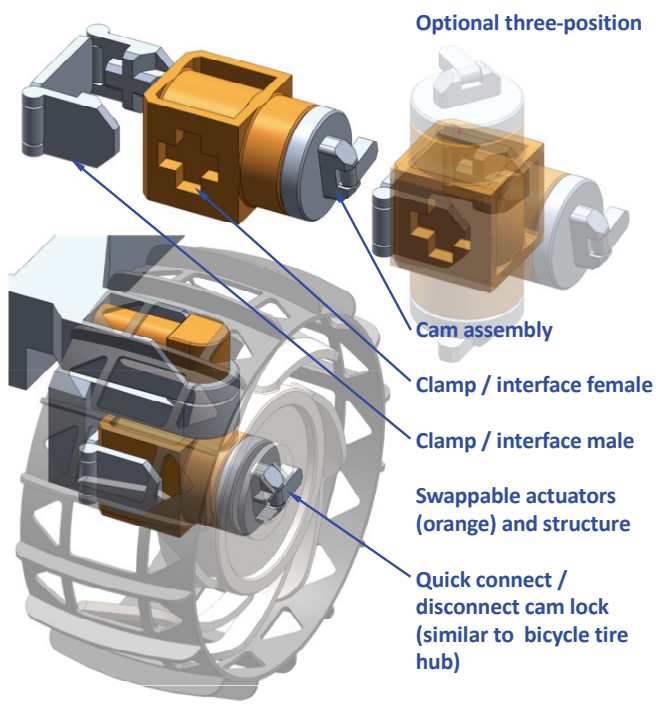

Figure 5: Modular swappable actuators (shown in orange), multiple orientations possible with cross connector

Since the connectors are swappable, a variety of tools and implements will interchangeable depending on the need, including wheels (Figure 5), robotic arms (Figure 8), drills, excavator implements, etc.

4. Modular Concepts

Building upon the miniaturized DTAU mechanical, power, and data connector, it will be possible to design a suite of modular concepts, like "LEGO" pieces that can be reconfigured in a variety of ways to meet the needs of various tasks. Each swappable part must encapsulate actuators, sensors, computation, and sweep motion envelopes locally, that can inform back up the kinematic chain. Swappable parts that appear in a sequential chain must have a male connector at one end, a female connector at the other end, and resolve rotation with harness service loops, liquid pass-throughs, thermal systems, etcetera internally. Figure 6 shows a variety of robotic arm segments with internal rotational relationships that must have self-contained harness coils and other solutions to allow liquids, power, and data to pass through. Each swappable module in Figure 6 contains an actuator within itself, with all revolute motion limits defined within itself.

Each mechanical male clamp fixture consists of passive kinematic mechanisms that angle outward to allow the insertion of the female component. The clamp can be opened or closed by inserting a motorized drive into a port on the bottom or top of the fixture (Figure 4). In Figure 4 the green surface shown (top) is the face that will be mounted to robotic bodies, frames, and other structures. A modular tool has been designed, also consisting of the same swappable interfaces, that will grasp a swappable part, insert a motorized drive into the clamp mechanism port, disengage the clamp, and pull the defective part away from the main body for maintenance purposes. Figure 7 shows the swapper tooling grasping a swappable actuator, about to insert it into a mechanical clamp fixture.

Any robotic vehicle fitted with a robotic arm and swapper tooling (Figure 8, bottom) will be able to edit any kinematic chain by bisecting it, isolate a faulty actuator, stowing the faulty part, retrieving a spare part, installing the spare in the arm, and reattaching the arm to the kinematic chain.

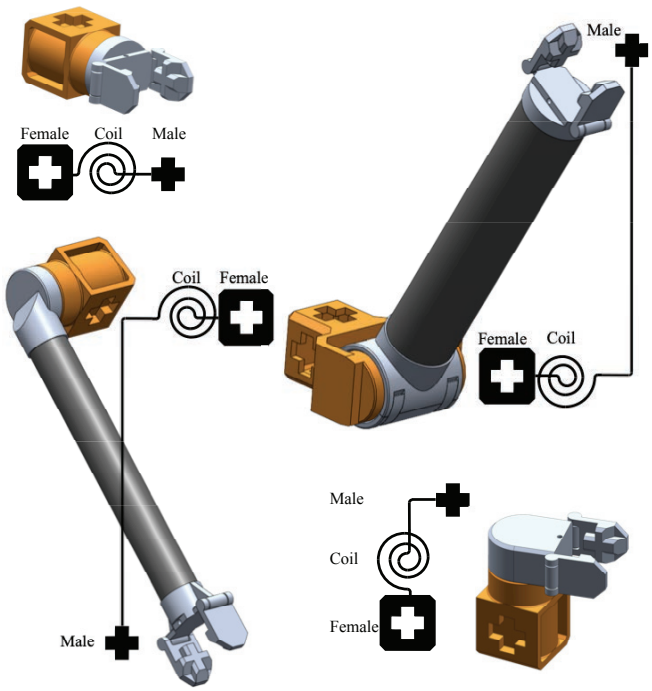

Figure 6: Each swappable module consists of male connector, female connector, and resolution of wiring harness for revolute actuators

Kinematic chains are series of structural elements that are kinematically constrained to move in a single degree of freedom in relation to each other.

A 6-degree-of-freedom (DOF) robotic arm would have five or more kinematic mechanisms in sequence where each structural element is designed to move in revolute or prismatic constraint in relation to each other.

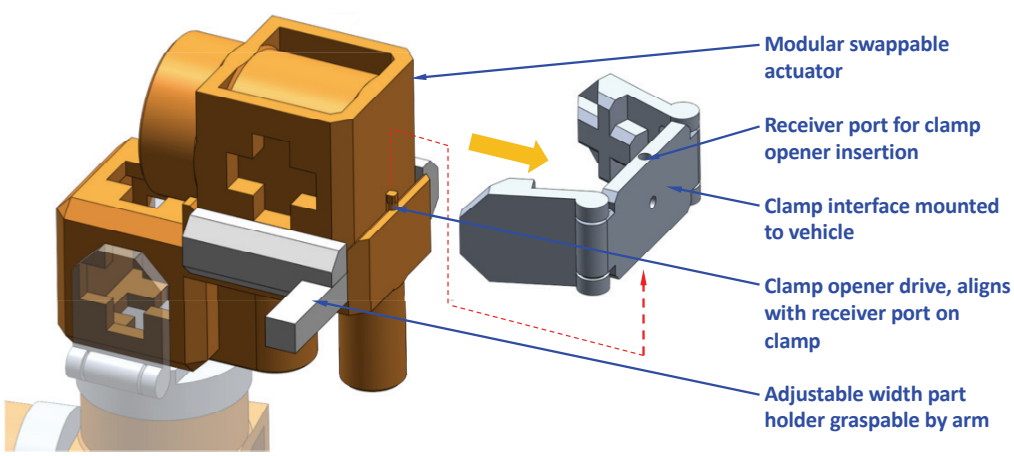

Figure 7: Module swapper tooling inserting a swappable actuator into a male clamping fixture

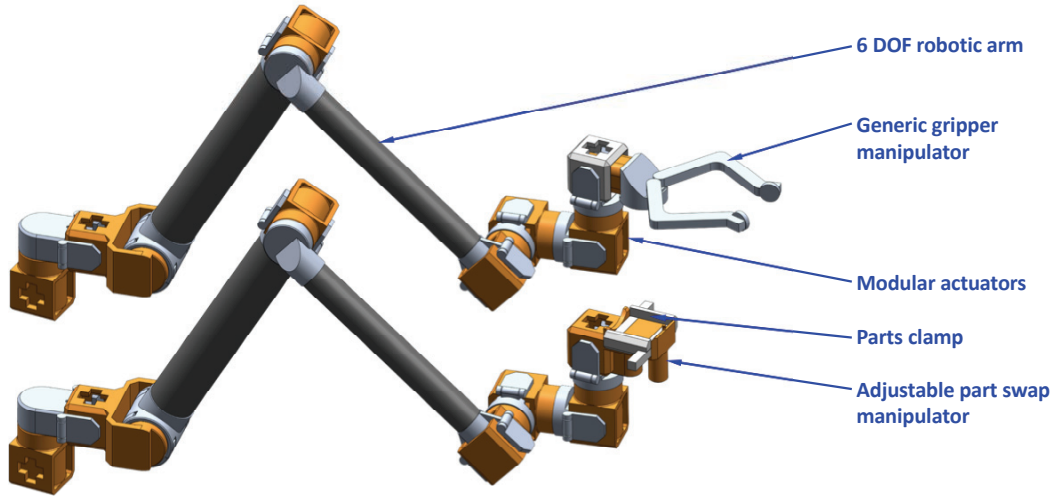

Figure 8: Modular robotic arms with swappable actuators

In cases where robotic arms have frozen into difficult or inaccessible orientations, the swapper tool can disassemble the kinematic chain one module at a time until it gains access to the faulty mechanism.

Since the swapper tool is also made of the same modular system, a second robotic arm fitted with a swapper tool can remove the first tool in case it malfunctions. Several other generic maintenance tools have also been designed into the suite, including a gripper manipulator (Figure 8, top).

With a set of modular "LEGO" pieces and a means of mechanically swapping faulty parts with spares, we are ready to build functional vehicles and kinematic chains. Robotic arms have already been described (Figure 8), and another simple kinematic mechanism is to assemble vehicles from the suite of modular parts.

The ISRU Excavator mobility chassis (Figure 9) uses completely modular swappable parts assembled into a mobile base structure that can be extended for multiple tasks. A rectangular body with front steerable actuators, all-wheel drive, passive 4-bar rocker suspension, and front / rear male clamping fixtures can be fitted with avionics, sensors, power, and communication systems.

The ISRU Excavator mobility system was designed for excavation and mining functions in Lunar, Mars, or other planetary surface environments. Excavator vehicles are sized in the 100-200kg range and can be delivered via Commercial Lunar Payload Services (CLPS) lander. For any ISRU operation, multiples of the vehicle will be required to reach any ISRU mining goals, plus spares and additional vehicles used for maintenance.

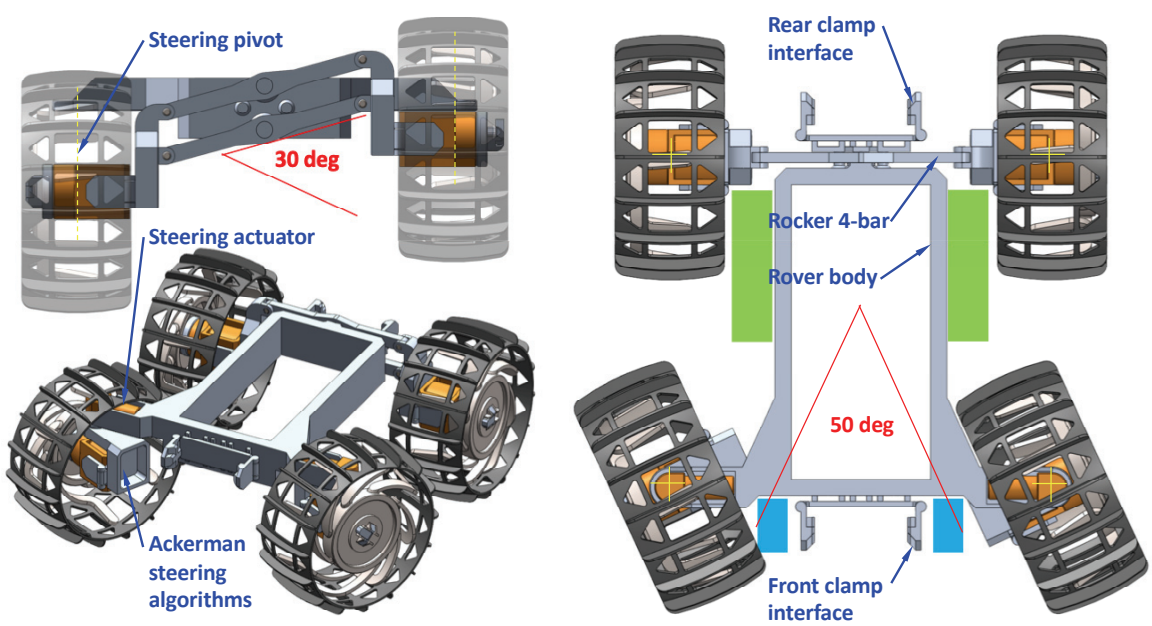

Figure 9: ISRU Excavator mobility chassis extensible by modular swappable components

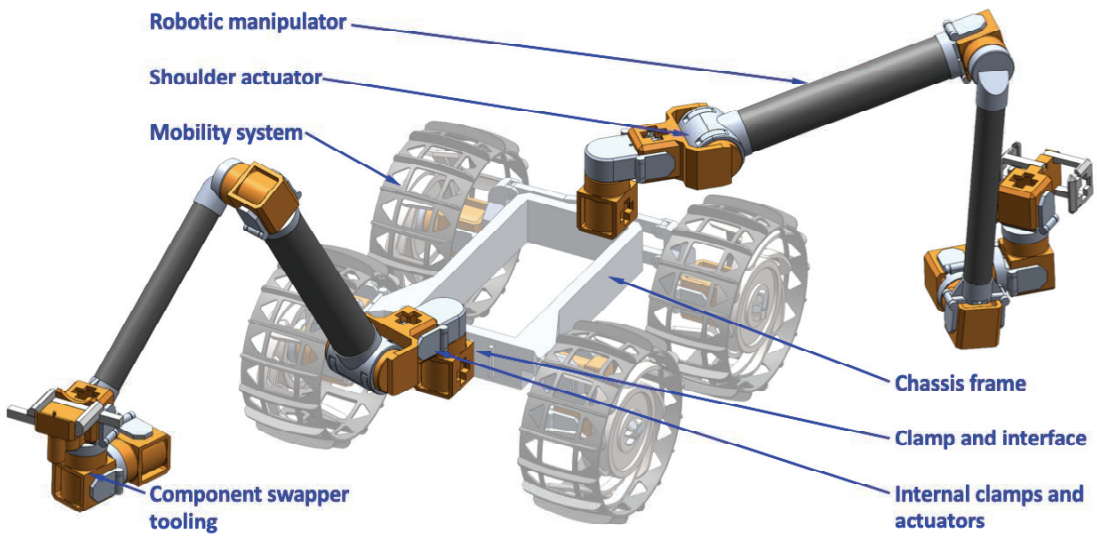

Figure 10: Robotic chassis fitted with maintenance and repair tooling

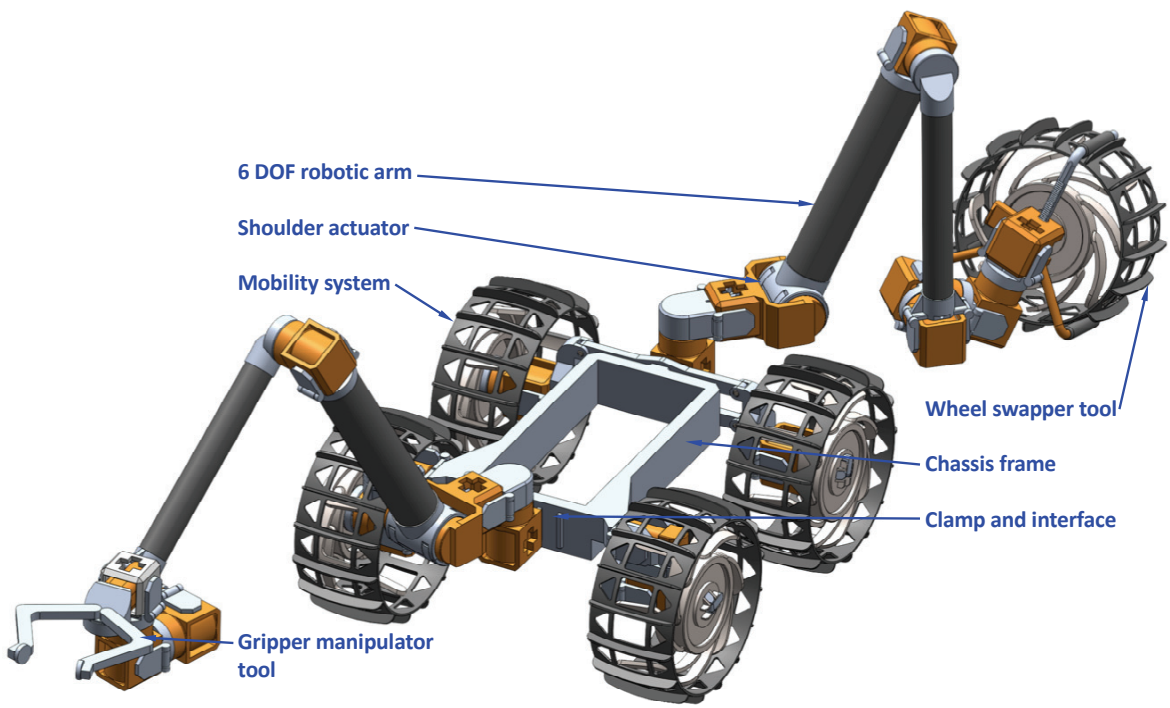

Figure 11: Robotic chassis fitted with manipulator and wheel swapper tooling

Using a large suite of small vehicles was explored by one of the authors (Wilcox [25]) as being efficient for delivery and manufacture.

It is assumed that an excavator vehicle will be able to provide maintenance on itself in only rare occasions, such as one robotic arm on a vehicle repairing a second arm. In all other situations at least two maintenance vehicles may be required for any mining operation, where one of the vehicles can be employed repairing the other if the need arises. Four basic maintenance implements include the module swapper tool (Figure 7), a clamp maintenance tool (Figure 10, on right end of vehicle), a general gripper tool, and a wheel swapper tool (Figure 11, on right end of vehicle). Each of the four maintenance implements are mounted to a 6-DOF robotic arm to allow for precision positioning of manipulator and part modules. The robotic arms are also modular and can be maintained using the maintenance systems. In the case of self-maintenance, the functioning robot may be able to dissect working arms from the malfunctioning robot to use them in turn to bring it back to working condition. However, because there may be situations where the malfunctioning maintenance robot freezing in certain configurations may not be recoverable, it is suggested that additional mobility chassis be employed for maintenance tasks, or that additional maintenance tools

be made available for the use of the excavator vehicles to function in the maintenance role.

For excavation, low gravity environments like the moon will need counter tractional devices that will assist in the excavation work. Counter traction could consist of percussive mechanisms [26,27], or implements with equal but opposite forces such as the RASSOR excavation drums [24]. Initially, three main excavator systems have been designed as modular attachments to the excavator chassis: the RASSOR-based concept, a backhoe concept, and a transverse bucket wheel concept.

A RASSOR-based [24] excavator system includes booms fitted to the front and rear clamp fixtures, that hold cantilevered bucket drum excavators (Figure 12). When the drums are spun in the excavation direction, baffles inside the enclosures keep loose excavated material from spilling out. The drums can be rotated in reverse to empty them.

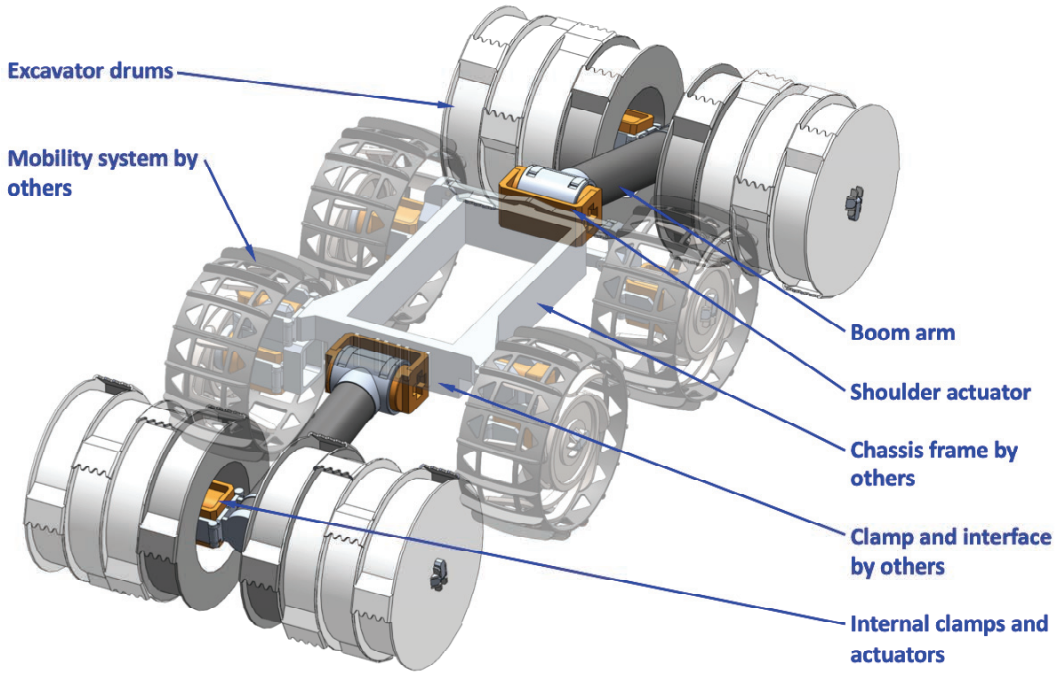

Figure 12: Robotic chassis fitted with bucket drum excavator tools as a Regolith Advanced Surface Systems Operations Robot (RASSOR) [24]

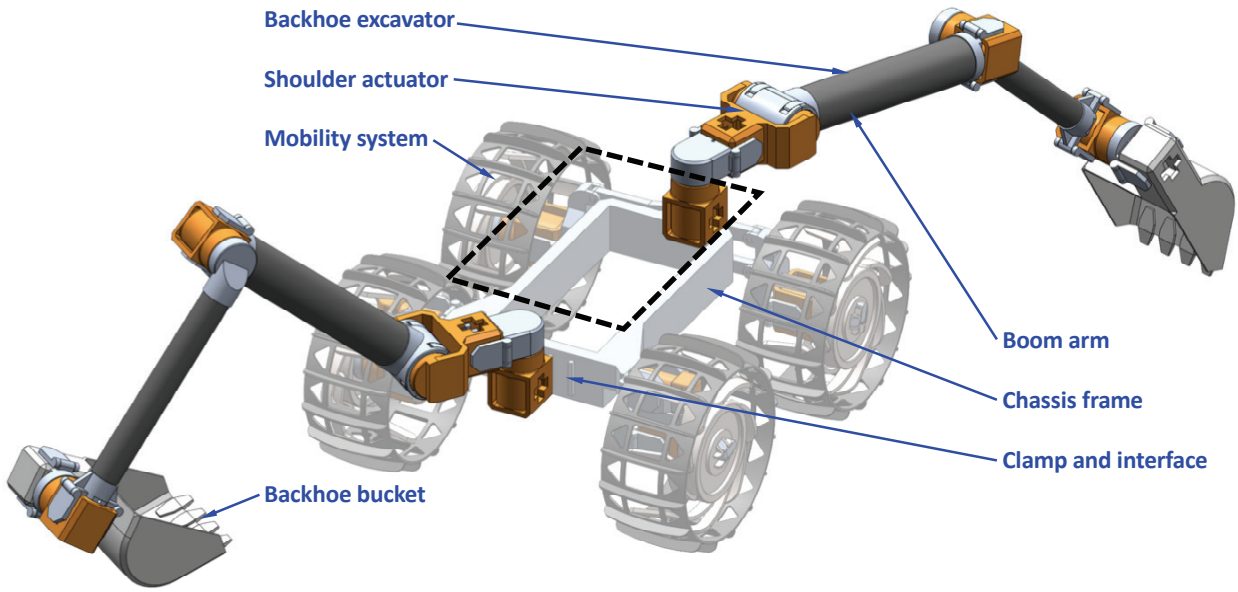

Figure 13: Robotic chassis fitted with backhoe robotic limbs (optional hopper shown dashed)

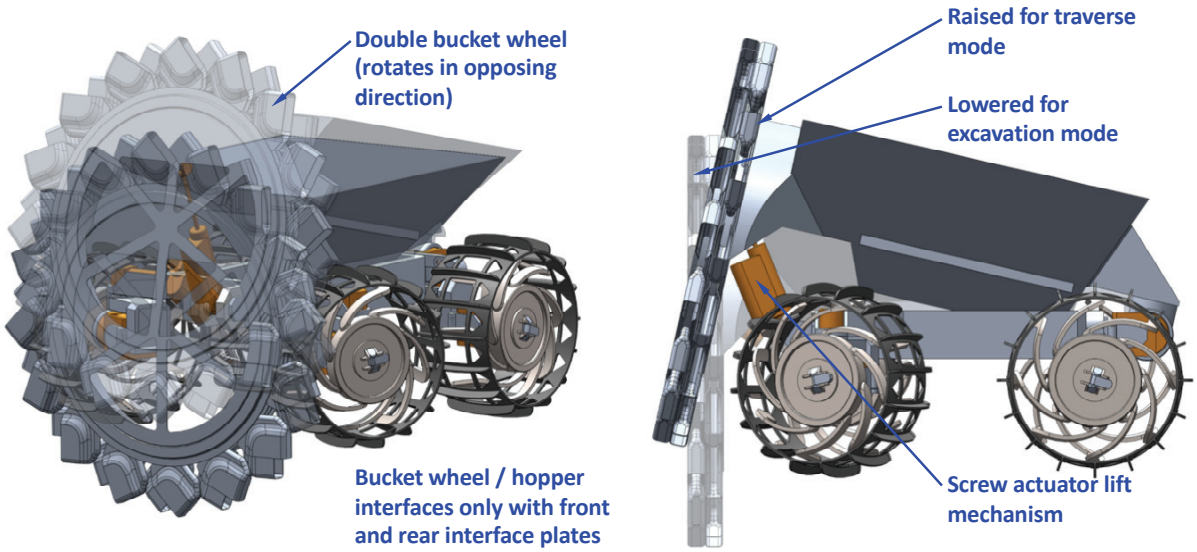

Figure 14: Robotic chassis fitted with hopper and dual transverse bucket wheel excavators

A second excavator is a backhoe type excavator, fitting backhoe buckets on the end of robotic arms (Figure 13). Counter traction would be achieved by using both backhoes simultaneously. The operation of the backhoe would include piling material next to a trench for re-use to bury cables, or may employ an optional hopper to carry material to an ISRU processing plant.

The third excavator concept uses a transverse bucket wheel mounted to the front of the mobility platform, with counter-rotating wheels for counter traction (Figure 14). The bucket wheels dump into a slide that fills a hopper on the back of the mobility platform. The bucket wheels are fixed to the hopper and must be tilted out of the way when in transport mode, but the hopper is bottom dumping.

A quarter-scale articulated model of the mobility chassis has been printed out of 3D printed aluminum parts (Figure 15, Figure 16). The model tests articulated male clamp fixture, and female steering and drive actuators in place.

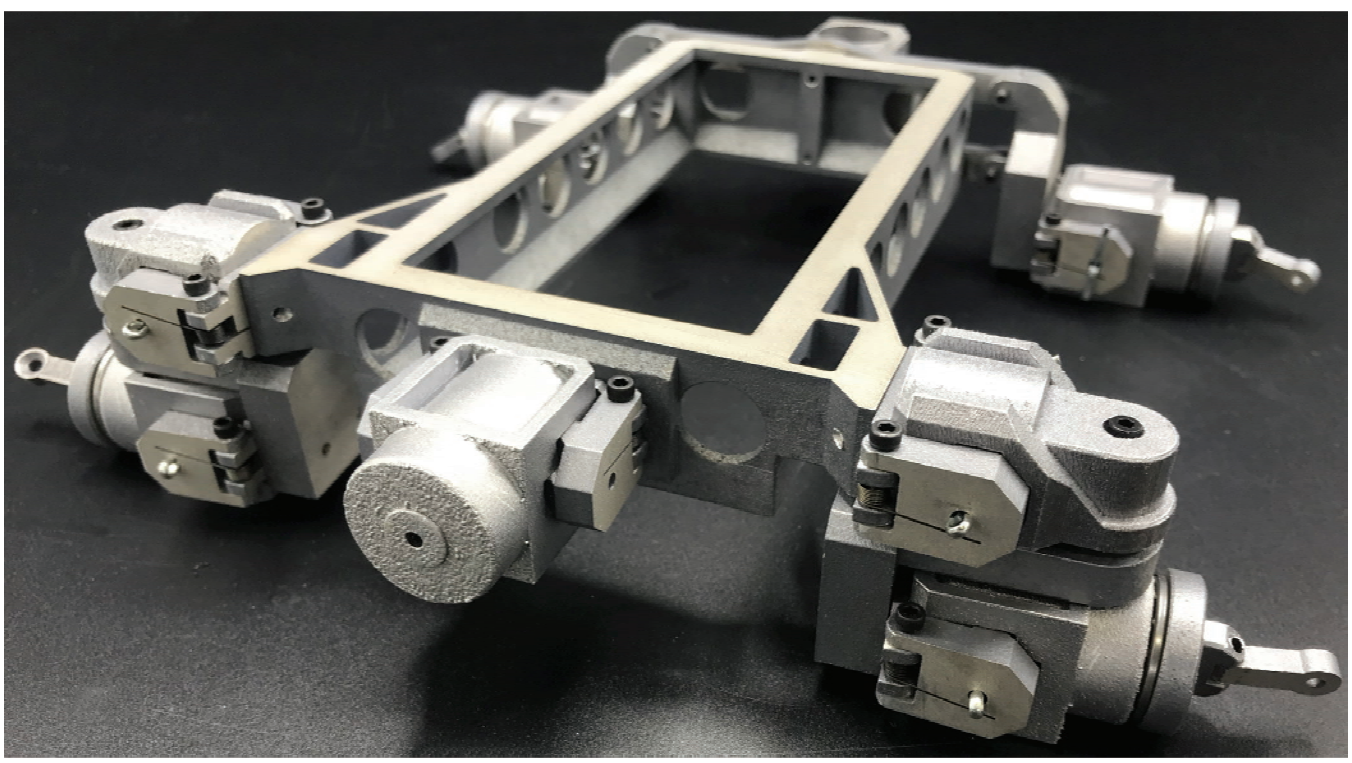

Figure 15: 1/4 scale prototype articulated model showing chassis, modular clamps, swappable drive actuator, and swappable steering system

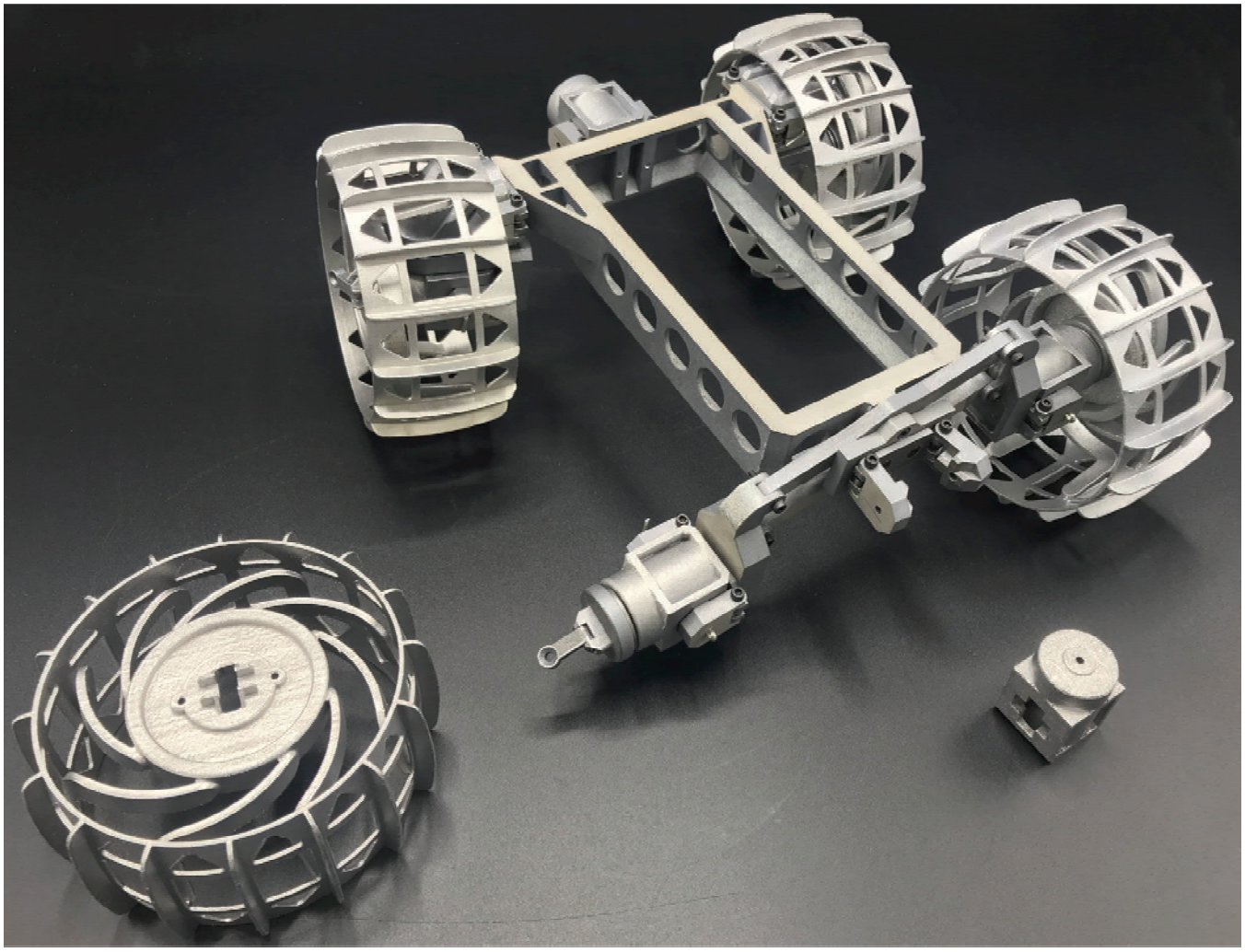

Figure 16: 1/4 scale prototype articulated model showing 4-bar rocker suspension system and unengaged modular clamp

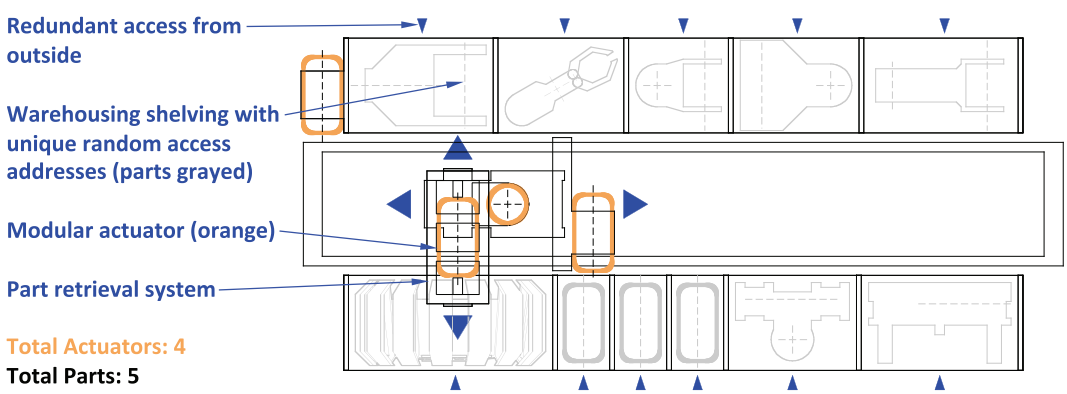

Figure 17: Autonomous warehousing and storage system concept schematic [1]

In order for a robotic system to continue indefinitely, it must have a continuous supply of energy and spare parts, along with the means to swap out used parts and insert new ones. The modular parts we have proposed represent primitives that the robotic maintenance system can swap, but will not be able to open up and perform repairs inside. For all practical purposes, from the perspective of the robotic maintenance system the part modules are fully encapsulated black boxes.

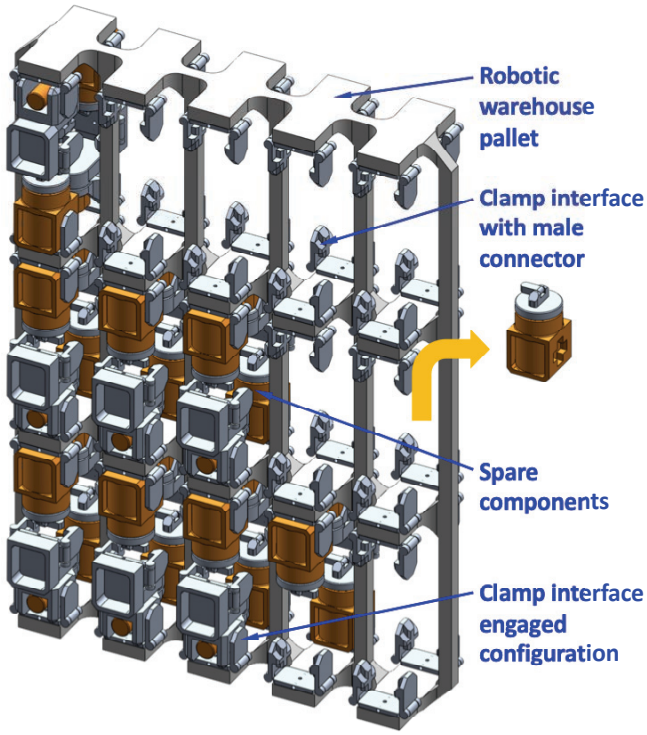

Figure 18: Robotic warehouse pallet using clamp interface system concept

In a previous paper [1] we proposed an automated warehousing and storage system as a means of delivering spares and storing new and faulty components (Figure 17). The previous effort proposed a modular automated shelving system constructed with the same swappable actuators and components as the rover, so that the warehousing system itself could also be maintained if needed.

Using the modular clamp interface fixtures proposed in Figure 4, we have designed a robotic warehouse pallet for delivering modular parts for maintenance (Figure 18). The parts are stored in the robotic pallet and can draw power and data through the clamp interface on the pallet frame. In case of a failure of a part module, a mobility platform fitted with a component swapper tool on a robotic arm will retrieve the malfunctioning module, bring it to the warehouse pallet, plug it into a blank slot, and engage the mechanical clamp. Next a new replacement module will be retrieved from the warehouse pallet, taken to the malfunctioning robot, and inserted into the target kinematic chain. As long as there is a continuous supply of new parts delivered to the work site, the maintenance system should be able to maintain the excavation system indefinitely.

5. Working With Human Crews

As robotic warehouse pallets begin to fill up with malfunctioning parts, which are considered encapsulated black boxes by the robotic maintenance and repair system, human crews may be used to "break open" the sealed units to make repairs and extend the life of the system. Robotic warehouse pallets can be transported to a nearby human outpost where a maintenance workshop is available.

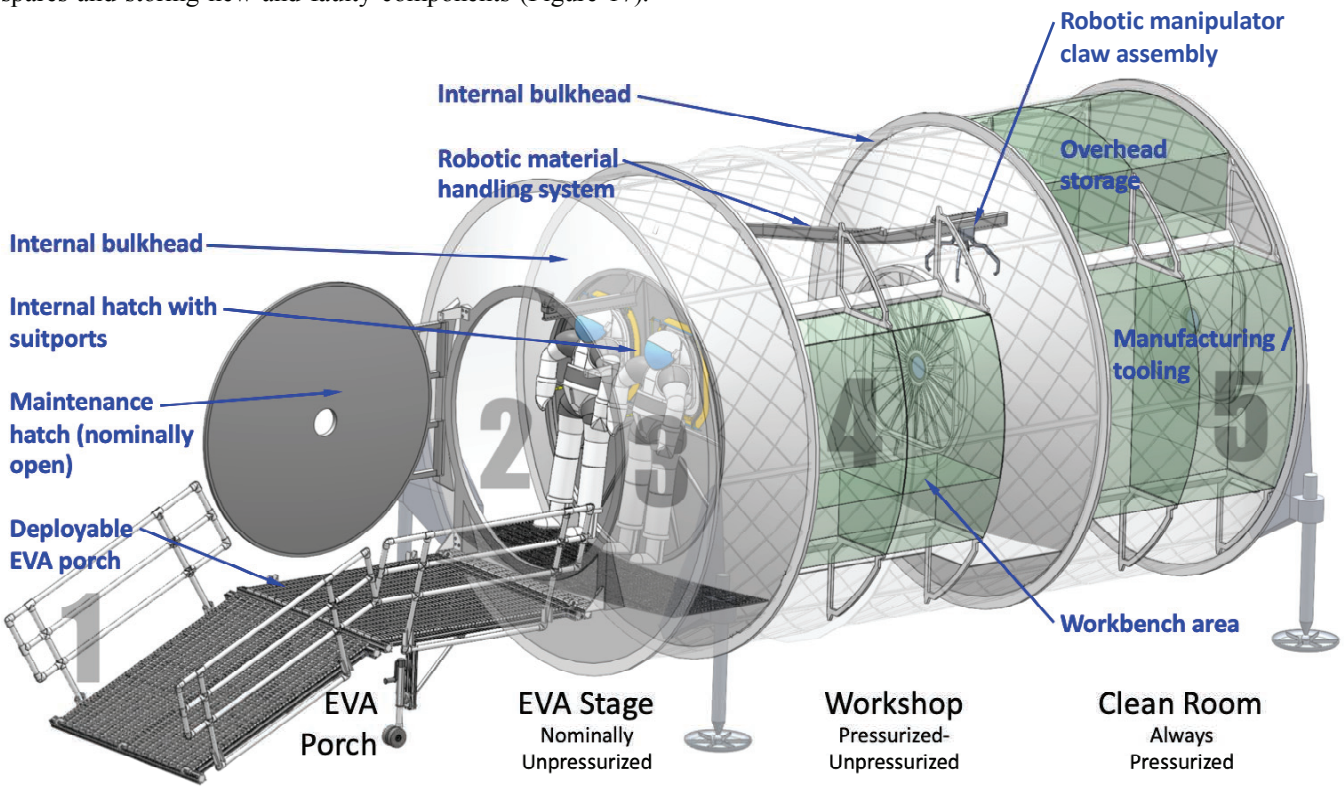

Figure 19: Human outpost maintenance habitat with five dust mitigation zones

We have designed a five-zone habitat module [28,29] that can function as a porch for Extra-Vehicular Activity (EVA), roughly based on the dual-chamber suitlock concept [30]. The habitat module (Figure 19) will have three pressurizable compartments with a Deployable EVA Porch (DEVAP) [31].

For EVA operations, the DEVAP porch will serve as the first layer of dust protection where human crew members can "stomp" their feet to remove dust, and rovers can use as a ramp for access to the main hatch. Inside the hatch, which is nominally kept open, will be the second layer, the EVA Stage compartment nominally kept unpressurized for quick EVAs. The EVA Stage functions will include stomp grille, suitlock mode, large airlock mode, suit umbilical, suit battery charging, dust / particle mitigation, air shower, vacuum, EVA tool storage, unpressurized storage, and overhead material handling system [32].

A Third layer of dust protection will be the suitports, with EVA suits attached. The suitports will be set in a bulkhead hatch that can swing inward into the fourth layer of protection, the Workshop volume, as a fixed stand for suit maintenance. Nominally the workshop will remain pressurized. Workshop functions will include coarse assembly / disassembly, suit maintenance, dust mitigation, fume mitigation, drilling, cutting, machining, bonding, inspection, variable pressure volume, and overhead material handling system.

Malfunctioning modular components from our robotic excavation system can be brought into the maintenance habitat without the crew having to do an EVA. First, the maintenance habitat outer hatch is nominally kept open for frequent EVAs (Figure 20.1). At this point the EVA Stage chamber is unpressurized, and the suitport bulkhead hatch is closed. Both the Workshop and Clean Room are pressurized (pressurized volume shown in yellow).

Second, a robotic excavator maintenance robot approaches with a faulty part module. Figure 20.2 shows the maintenance robot approaching the module habitat and ascending the DEVAP ramp with a malfunctioning part module shown in blue. In the EVA Stage, a robotic gripper claw waits on the overhead material handling system. The material handling system consist of two sections: a permanent section spanning the EVA Stage volume, and an articulated track that swings up into the Workshop volume.

Third, the Workshop volume is depressurized, with the robotically actuated suitport bulkhead hatch swung open (Figure 20.3). The overhead articulated material handling track swings down into place on a level with the permanent fixed track in the EVA Stage in order to give a continuous track for the robotic gripper claw to travel on. The robotic excavator maintenance vehicle hands off the faulty part module to the overhead gripper claw.

Fourth, the robotic excavator maintenance vehicle backs away, the main outer hatch is shut, and the EVA Stage and Workshop are pressurized (Figure 20.4). The faulty part module is then carried inside the Workshop area and lowered onto a workbench. At this point the material handling system is no longer needed and can swing out of the way, the suitport bulkhead hatch can be closed, and the EVA Stage volume depressurized for nominal EVA operations.

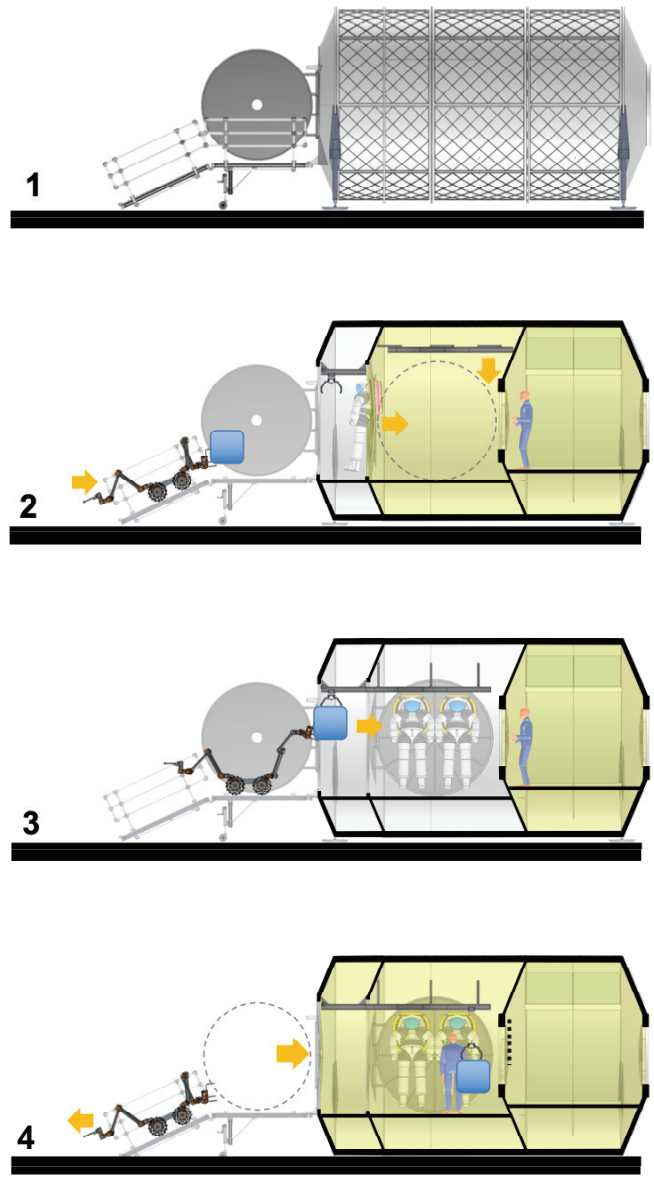

Figure 20: Robotic component insertion (pressurized volume shown yellow) Step 1: maintenance module with hatch open; Step 2: Excavator robot approaches with defective part, material handling track deploys; Step 3: Excavator robot hands off part to material handling; Step 4: Excavator robot departs, hatch closes, and workshop volume is pressurized

The fifth layer of dust protection is the Clean Room which is always pressurized. Clean Room functions will include fine assembly / disassembly, electronics repair, soldering, analysis, inspection, soft goods repair, precision work,

manufacturing, fabrication, Computer Aided Design (CAD) modeling, and 3D printing. The Clean Room will be equipped with glove box precision manufacturing and repair workstations [33] that will allow crew to make repairs in a clean environment (Figure 21).

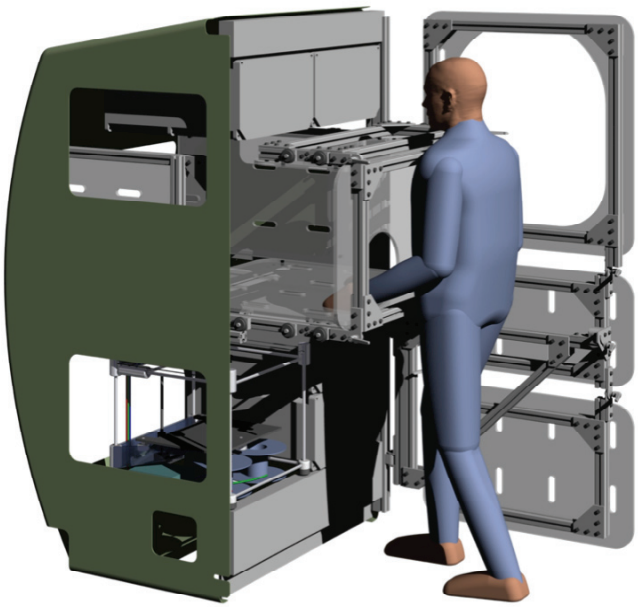

Figure 21: Maintenance workstation for the repair of robotic modular parts [33]

Crew members will work on the faulty part modules on the Workshop bench, or move subcomponents into the Clean Room as needed for repairs. It is assumed that many otherwise End Of Mission (EOM) repairs can be made on the parts, and extend the life of the excavation system with less need to send new parts.

6. Summary and Conclusions

Starting from statistical information on part failures in terrestrial mining operations, robotic subsystems were compartmentalized and encapsulated into swappable part modules. A modular connector system based on cross-shaped miniaturized dust tolerant interfaces allow for a large number of flexible configurations to be made in the field, and recombined as needed for specific tasks. Using this basic kit-of-parts, a self-repairing, self-maintaining robotic excavation system based on a modular robotic mobility platform was devised for ISRU operations. We manufactured a quarter scale articulated model for testing interfaces and modularity, resulting in what we assume to be a highly efficient approach to designing a suite of excavators. Future work will include refining of the DTAU design and functionality, self-maintainability, robustness of actual prototype systems, and assessing the technology and process options from a lifecycle performance context. MTTF parameters for DTAU and clamp interface fixtures for part modules needing frequent exchanges will be evaluated to increase overall system availability.

Acknowledgements

This research was carried out at the Jet Propulsion Laboratory, California Institute of Technology under a contract with the National Aeronautics and Space Administration, and NASA Kennedy Space Center (KSC).

References

[1] BH Wilcox; H Nayar; AS Howe (2019). Autonomous Mars ISRU Robotic Excavation: Characteristics and Performance Targets. *IEEE Aerospace Conference*, Big Sky, Montana, USA, 2-9 Mar 2019. New York, New York, USA: Institute of Electrical and Electronics Engineers.

[2] BS Dhillon (2008). *Mining equipment reliability, maintainability, and safety*. Springer Series in Reliability Engineering. London, UK: Springer-Verlag. doi:10.1007/978-1-84800-288-3

[3] AM Morad; M Pourgol-Mohammad; J Sattarvand (2014). Application of reliability-centered maintenance for productivity improvement of open pit mining equipment: Case study of Sungun Copper Mine. *Journal of Central South University*, Volume 21, Number 6, pp2372-2382.

[4] S Kassel (1971). Lunokhod-1 Soviet lunar surface vehicle. Number 802-ARPA. RAND CORP SANTA MONICA CA. https://apps.dtic.mil/dtic/tr/fulltext/u2/733960.pdf

[5] D Baker (Jul 1971). Lunar Roving Vehicle: Design Report. Spaceflight, Volume 13, pp234-240.

[6] Boeing LRV Systems Engineering (Apr 1971). Lunar Rover Operations Handbook, Document LS006-002-2H, Huntsville, Alabama.

[7] B Burkhalter; M Sharpe (1998). Lunar Roving Vehicle: Historical Origins, Development and Deployment, History of Rocketry and Aeronautics, AAS History Series, Volume 22, pp227-261.

[8] US Senate Committee on aeronautical and Space Sciences (1971). Soviet space programs, 1966-70, Senate Document Number 92-51. Washington DC: US Government Printing Office.

[9] W Shelton (1969). Soviet space exploration - the first decade. London, United Kingdom: Arthur Barker Ltd.

[10] B Harvey (1996). The new Russian space programme from competition to collaboration. Chichester, United Kingdom: John Wiley & Sons.

[11] ME Davies; TR Colvin (Aug 2000). Lunar coordinates in the regions of the Apollo landers. Journal of Geophysical Research, Volume 105, Number E8, pp20277-20280.

[12] A Chaikin (Mar 2004). The other Moon landings - A Soviet triumph in the shadow of Apollo. Air & Space Magazine, pp30-37.

[13] J Li (2014). China's lunar rover begins journey. Physics World, Volume 27, Number 01, p11.

[14] Q Liu; X Zheng; Y Huang; P Li; Q He; Y Wu; G Li; M Tang (2014). Monitoring motion and measuring relative position of the Chang'E-3 rover. Radio science, Volume 49, Number 11, pp1080-1086. https://doi.org/10.1002/2014RS005449

[15] Y Jia; Y Zou; J Ping; C Xue; J Yan; Y Ning (2018). The scientific objectives and payloads of Chang'E−4 mission. Planetary and Space Science, Volume 162, pp207-215. https://doi.org/10.1016/j.pss.2018.02.011

[16] BH Wilcox; T Nguyen (1998). Sojourner on Mars and lessons learned for future planetary rovers (No. 981695). SAE Technical Paper.

[17] J Matijevic (1997). Sojourner: The Mars Pathfinder Microrover Flight Experiment. (1997). Space Technology. https://doi.org/10.1016/S0892-9270(97)00032-8

[18] G Webster (25 May 2011). NASA's Spirit Rover Completes Mission on Mars. NASA JPL News.

[19] DC Agle; D Brown; J Wendel (13 Feb 2019). NASA's Opportunity Rover Mission on Mars Comes to End. NASA JPL News.

[20] J Nelson (2011). Mars science laboratory curiosity rover. NASA JPL mission website. https://www.jpl.nasa.gov/missions/mars-science-laboratory-curiosity-rover-msl/ Accessed 18 Nov 2019.

[21] NASA Science Mission Directorate, Mars Exploration Program, NASA-JPL MSL Rover Website. https://mars.jpl.nasa.gov/msl/home/ Accessed 18 Nov 2019.

[22] SB Stancliff (2009). *Planning to Fail: Incorporating Reliability into Design and Mission Planning for Mobile Robots*. PhD Dissertation Carnegie Mellon University, The Robotics Institute.

[23] JM Schuler; AJ Nick; C Immer; RP Mueller (2010). Quick Attach Docking Interface for Lunar Electric Rover. doi:10.1061/41096(366)124

[24] RP Mueller; RE Cox; T Ebert; JD Smith; JM Schuler; AJ Nick (2013). Regolith Advanced Surface Systems Operations Robot (RASSOR). *2013 IEEE Aerospace Conference*, Big Sky, Montana, USA. New York, New York, USA: Institute of Electrical and Electronics Engineers.

[25] BH Wilcox (2005). Snow White and the 700 Dwarves. In LE Parker, FE Schneider, AC Schultz (eds), *Multi-robot Systems - From Swarms to Intelligent Automata: Proceedings from the 2005 International Workshop on Multi-robot Systems*, pp123-130. doi:10.1007/978-94-017-2376-3_13

[26] RP Mueller; JD Smith; T Lippitt; JM Schuler; A Nick (2013). Reducing Extra-terrestrial Excavation Forces with Percussion. *2013 IEEE Aerospace Conference*, Big Sky, Montana, USA. New York, New York, USA: Institute of Electrical and Electronics Engineers.

[27] K Zacny; Y Bar-Cohen; K Davis; P Coste; et al (2009). In Y Bar-Cohen, K Zacny (eds), *Drilling in Extreme Environments: Penetration and Sampling on Earth and Other Planets*, pp347-557. doi:10.1002/9783527626625.ch6

[28] B Sherwood (2018). Robotic Lunar Surface Operations, IAC-18.A3.1.6.x46496. *69th International Astronautical Congress IAC2018*, Bremen, 2018.

[29] AS Howe; A Austin; T Colaprete; J Elliott; T Fong; S Magnus; P Metzger; A Parness; R Polit-Casillas; HH Schmitt; B Sherwood; M Sims; MW Smith; G Voecks; K Zacny (2019). Planetary Autonomous Construction System (P@X). *70th International Astronautical Congress IAC2019*, 21-25 October 2019, Washington DC, USA.

[30] AS Howe; KJ Kennedy; P Guirgis; R Boyle (2011). A Dual-Chamber Hybrid Inflatable Suitlock (DCIS) for Planetary Surfaces or Deep Space (AIAA2011-5064). *41st International Conference on Environmental Systems (ICES2011)*, Portland, Oregon, USA, 17-21 July 2011. Reston, Virginia, USA: American Institute of Aeronautics and Astronautics.

[31] AS Howe; J Merbitz; A Dokos (2012). Deployable Extravehicular Activity Platform (DEVAP) for Planetary Surfaces (AIAA2012-5312). *AIAA Space 2012 Conference & Exhibition*. Pasadena, California, USA, 11-13 Sep 2012. Reston, Virginia, USA: American Institute of Aeronautics and Astronautics.

[32] AS Howe; S Haselschwardt (2012). Radial Internal Material Handling System (RIMS) for Circular Habitat Volumes (AIAA2012-3576). *42nd International Conference on Environmental Systems (ICES2012),* San Diego, California, USA, 15-19 July 2012. Reston, Virginia, USA: American Institute of Aeronautics and Astronautics.

[33] AS Howe (2014). Workstation Designs for a Cis-lunar Deep Space Habitat (AIAA-2014-4196). *AIAA Space 2014 Conference & Exhibition*, San Diego, California, USA, 5-7 Aug 2014. Reston, Virginia, USA: American Institute of Aeronautics and Astronautics.

BIOGRAPHY

A. Scott Howe *is a licensed architect and robotics engineer at NASA's Jet Propulsion Laboratory. He earned PhDs in industrial and manufacturing systems engineering from Hong Kong University and in architecture from University of Michigan. Dr. Howe spent 13 years of practice in Tokyo, Japan, and taught for 6 years at Hong Kong University. He specializes in robotic construction and currently is on the NASA development team building long-duration human habitats for deep space and permanent outposts for the moon and Mars. Dr. Howe also served as a member of the JPL All-Terrain Hex-Limbed Extra-Terrestrial Explorer (ATHLETE) robotic mobility system development team, and HabEx exoplanet large space telescope design team.*

Brian Wilcox *has been with JPL for more than 34 years. He was the Supervisor of the JPL Robotic Vehicles Group for over 20 years, is now the Manager of Space Robotics Technology, and is a JPL Fellow. He was the Principal Investigator for the NASA ATHLETE and Nanorover robotic vehicle development efforts from 2004-2015 and 1995-2000, respectively. He received a B.S. in Physics and a B.A in Mathematics from the University of California at Santa Barbara and an MS in Electrical Engineering from the University of Southern California.*

Hari Nayar *is the supervisor of the Robotics Modeling and Simulation Group in the Mobility and Robotics Section and a Principal Robotics Technologist at JPL. His research interests include modeling, analysis and control of robotics systems, optimal design and configuration of mechanisms, design and optimization of human-machine interfaces and robotics systems for medical and extreme environmental applications. He received his BS, MS and ScD degrees in Mechanical Engineering from MIT.*

Robert Mueller *received a B.S. in Mechanical Engineering from the University of Miami, Coral Gables, Florida, in 1988. In addition, he has been awarded a Master of Space Systems Engineering from the Technical University of Delft, Netherlands and a Master of Business Administration, Florida Institute of Technology, Melbourne, Florida. He has 24 years of NASA mechanical engineering, robotics and management experience in aerospace operations, design and research & technology development. Currently he is a senior aerospace technologist in the KSC Surface Systems Office and he is the NASA agency Lunar Destination Co-Lead for the Human Spaceflight Architecture Team (HAT). He has served as the Chief of the Surface Systems Office at KSC and is actively engaged in technology development for NASA programs.*

Jason Schuler *received a B.S. in Mechanical Engineering from Florida Institute of Technology in 2007. He has been a contractor for NASA at the Kennedy Space Center for 5 years. Jason supports the NE-S office at KSC developing robotic technology and excavation tools for the moon and Mars. He has designed hardware for the SEV and ATHLETE rovers at JSC and JPL. On his personal time Jason is also heavily involved with FIRST robotics and educational outreach.*