International Conference on Environmental Systems, Boston, MA 2019
ICES Paper 2019-50

A Mechanically Pumped Two-Phase Fluid Loop for Thermal Control Based on the Capillary Pumped Loop

Ben Furst, Thermal Fluids Group
Team: Stefano Cappucci, Takuro Daimaru, Eric Sunada

Jet Propulsion Laboratory
California Institute of Technology

July 8, 2019

Overview

- The JPL Two-Phase Technology Group has developed a novel mechanically pumped two-phase fluid loop for thermal control
- Architecture is based on a modified Capillary Pumped Loop (CPL)
- A fully operational testbed using the target flight fluid (ammonia) has been built and tested
  - Test results demonstrate that the system is feasible

System Architecture

- Architecture is based on a Capillary Pumped Loop (CPL)
  - Additions to CPL include:
    1. A mechanical pump,
    2. A bypass line
    3. An additively manufactured planar evaporator

Typical CPL Architecture

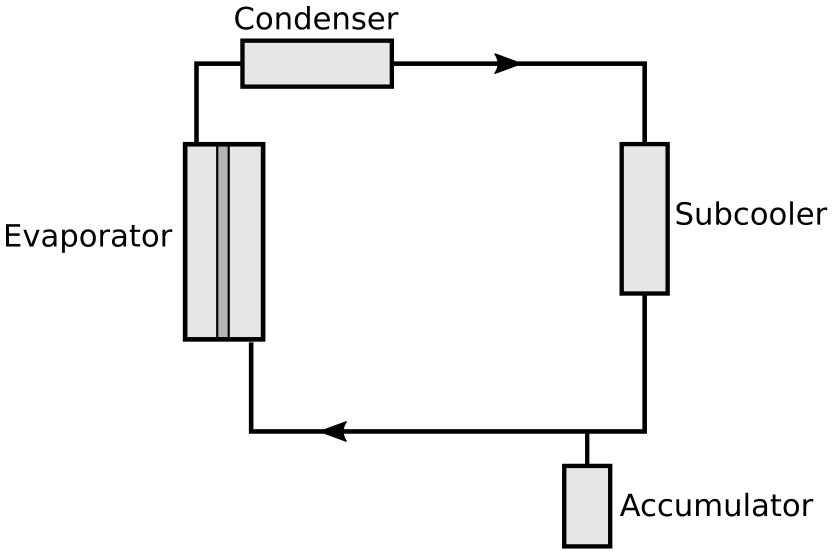

CPL with Mechanical Pump

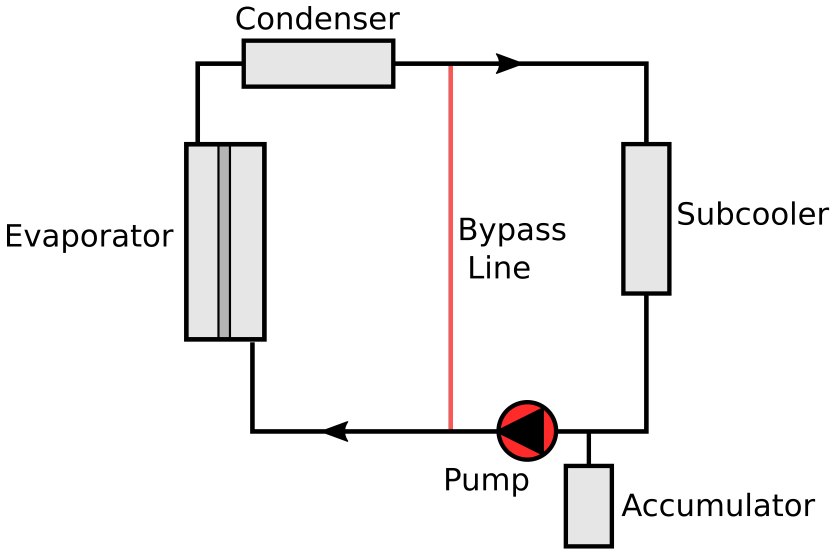

System Operation I

What does the pump do?

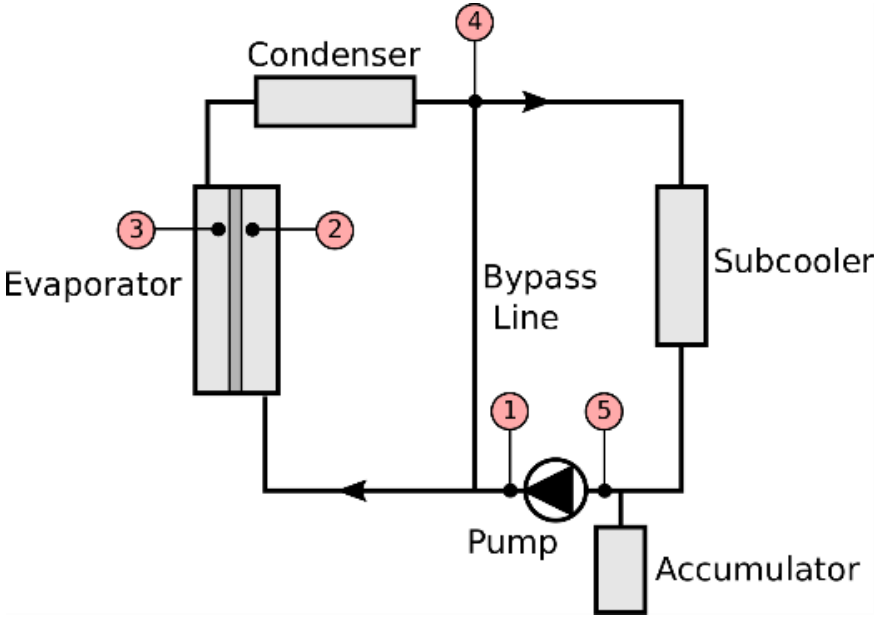

- Assume steady operation with meniscus established in evaporator
  - Liquid and vapor are separated at meniscus ($P_3 > P_2$)
  - Flow is single-phase everywhere except in condenser
- The pump does *not* push liquid through evaporator wick
  - Meniscus behaves like a hydrodynamic wall since at meniscus: $P_{vapor} > P_{liquid}$
- The pump only pushes liquid through the bypass line
  - This allows the pressure at the condenser outlet (P_4) to be dictated by the pump flowrate and pressure drop in the bypass line

System Operation II

How does the pump help?

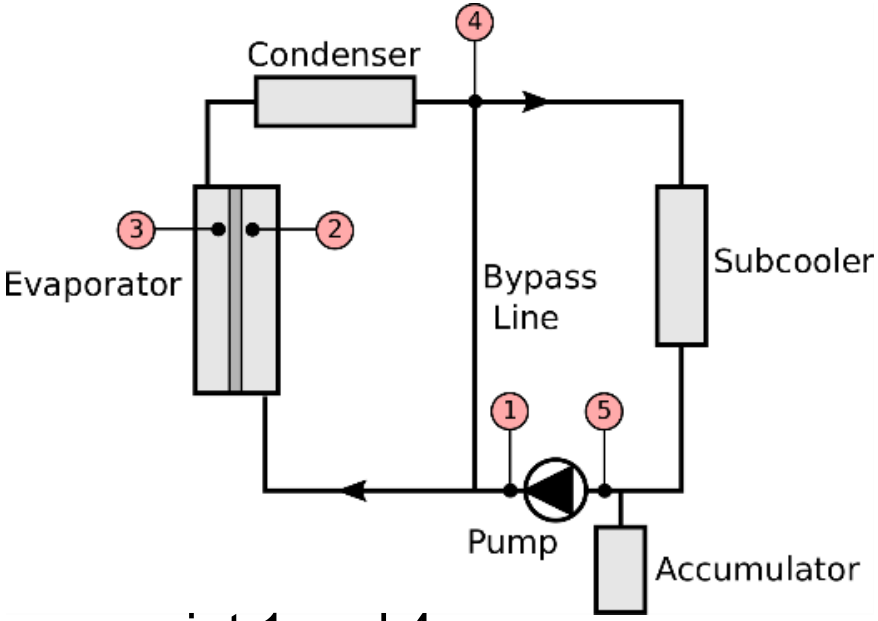

- Consider a pressure balance between point 1 and 4

$$\underbrace{\Delta P_{1,4}}_{\text{dP across bypass line}} = \underbrace{\Delta P_{1,2} + \Delta P_{3,4}}_{\text{dP in evap. line}} - \underbrace{\Delta P_{3,2}}_{\text{capillary pressure rise across meniscus}}$$

- Solve for capillary pressure: $\Delta P_{3,2}$

$$\Delta P_{3,2} = \Delta P_{1,2} + \Delta P_{3,4} - \Delta P_{1,4}$$

  - **Capillary pumping is assisted by pressure drop in bypass line**
  - **The mechanical pump covers the pressure drop in the bypass line**

System Operation III

CPL vs. Pump-Assisted CPL

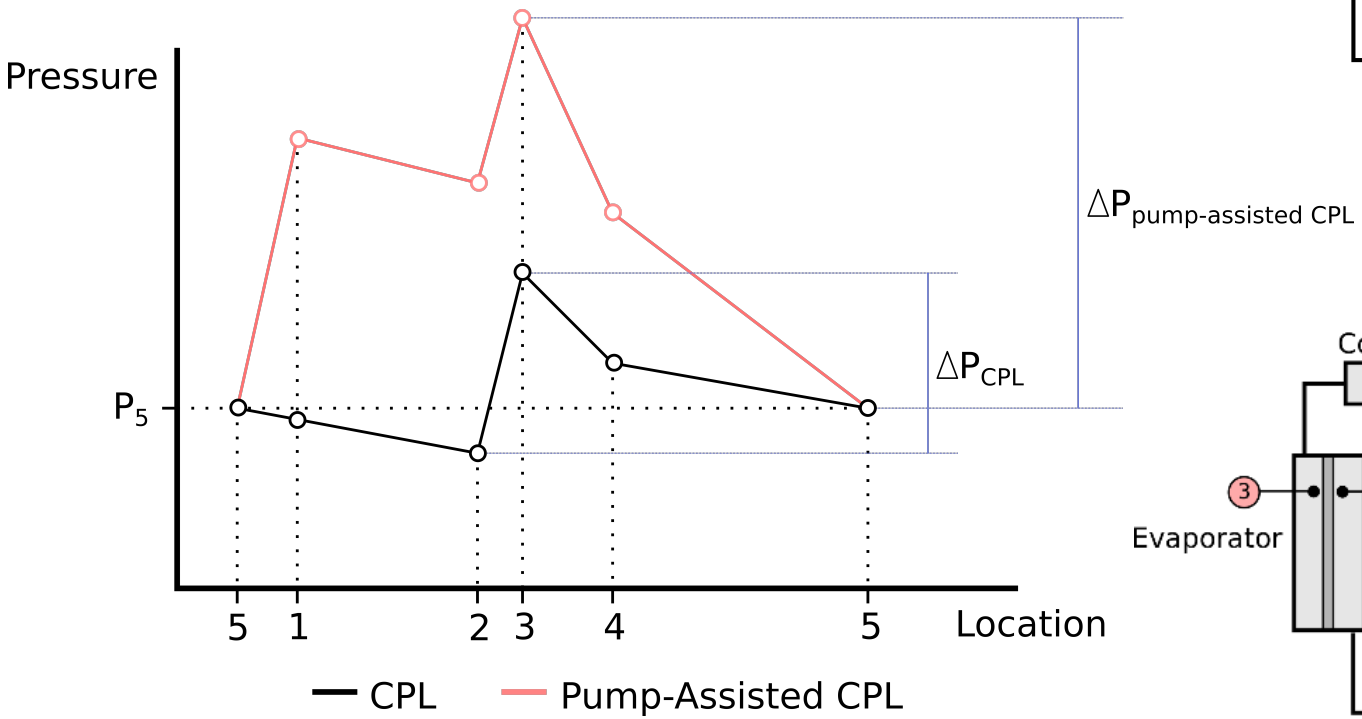

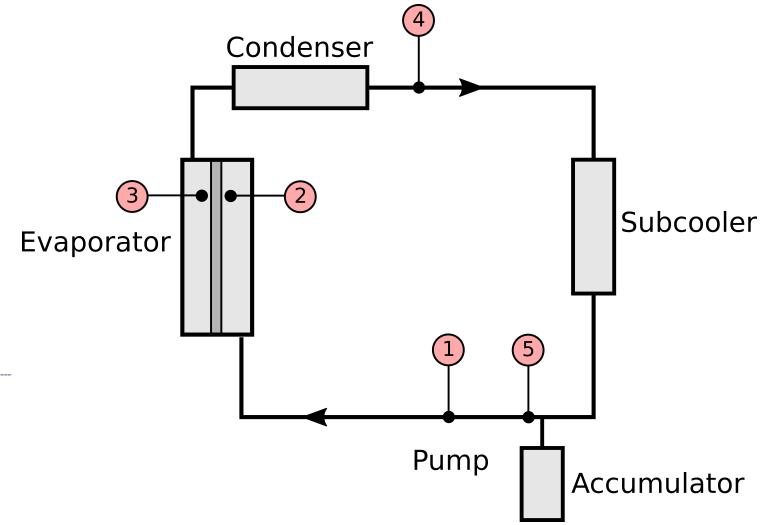

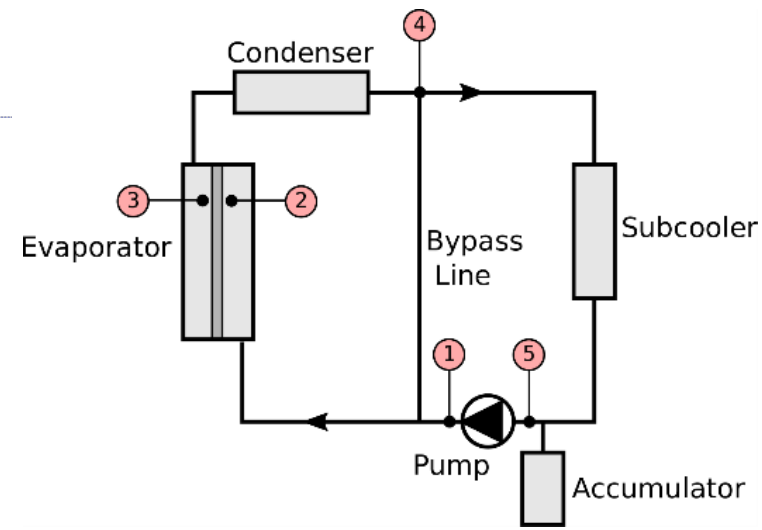

- **Addition of the mechanical pump can significantly increase pumping capacity**

Advantages of Pump-Assisted CPL Achitecture

- Adds additional capability to the classic CPL architecture
  - Can accommodate larger pressure drops due to pump
    - Higher heat loads are possible
    - Longer transport lengths possible
  - Simplifies integration and testing
    - Can incorporate mechanical fittings/valves
    - Less sensitive to adverse orientations during ground testing
  - More robust operation
    - Mechanical pump gives additional control authority
    - Could operate as a passive CPL with degraded performance if pump fails

Testing Overview

- A pump-assisted CPL has been built and is currently under test
  - Developed over past 3 years

- Currently working with an operationally flight-like system
  - Working fluid: Ammonia (target flight-fluid)
  - Incorporates all major system components in actual configuration
  - Instrumented to monitor temperature, pressure, flowrate

- System has demonstrated stable, repeatable performance
  - System is operating as anticipated
  - Over 350 hours of testing completed

- Recent test campaign showed promising results
  - Stable transport of heat loads from 30 W to 850 W
  - Heat fluxes sustained up to 13 W/cm^2
  - Maintained isothermal planar evaporator (± 2°C) between 30 W and 300 W for a fixed pump speed

Ammonia Testbed

System Schematic

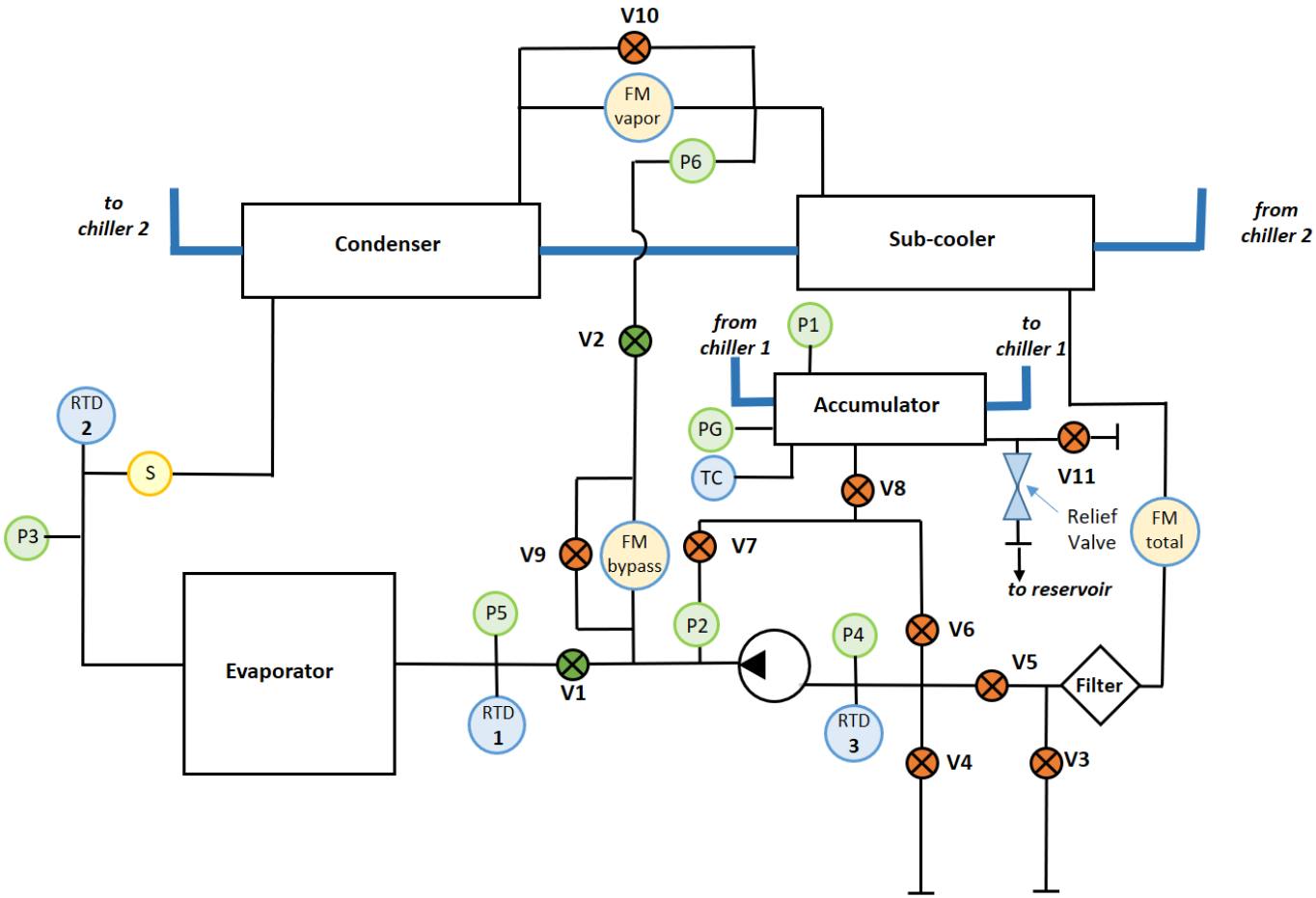

Operating Specifications	
Fluid	Ammonia
Nominal operating temperature	20°C
Max operating temperature	30°C
Nominal operating pressure (Ammonia vapor pressure at 20°C)	124 psia (110 psig)
Max planned working pressure (Ammonia vapor pressure at 30°C)	170 psia (155 psig)
Relief valve set pressure	215 psia (200 psig)
System Proof Pressure	250 psig

Legend		
P		Press. transducer (abs.)
PG		Pressure gauge (analog)
T		Temperature gauge
TC		Thermocouple
FM		Flow meter
S		Sight glass
		Ball valve
		Needle valve

Ammonia Testbed

Hardware

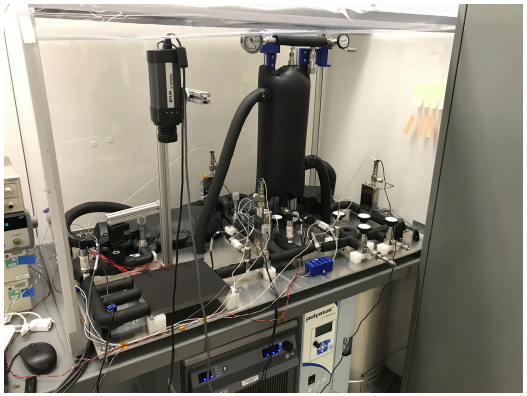

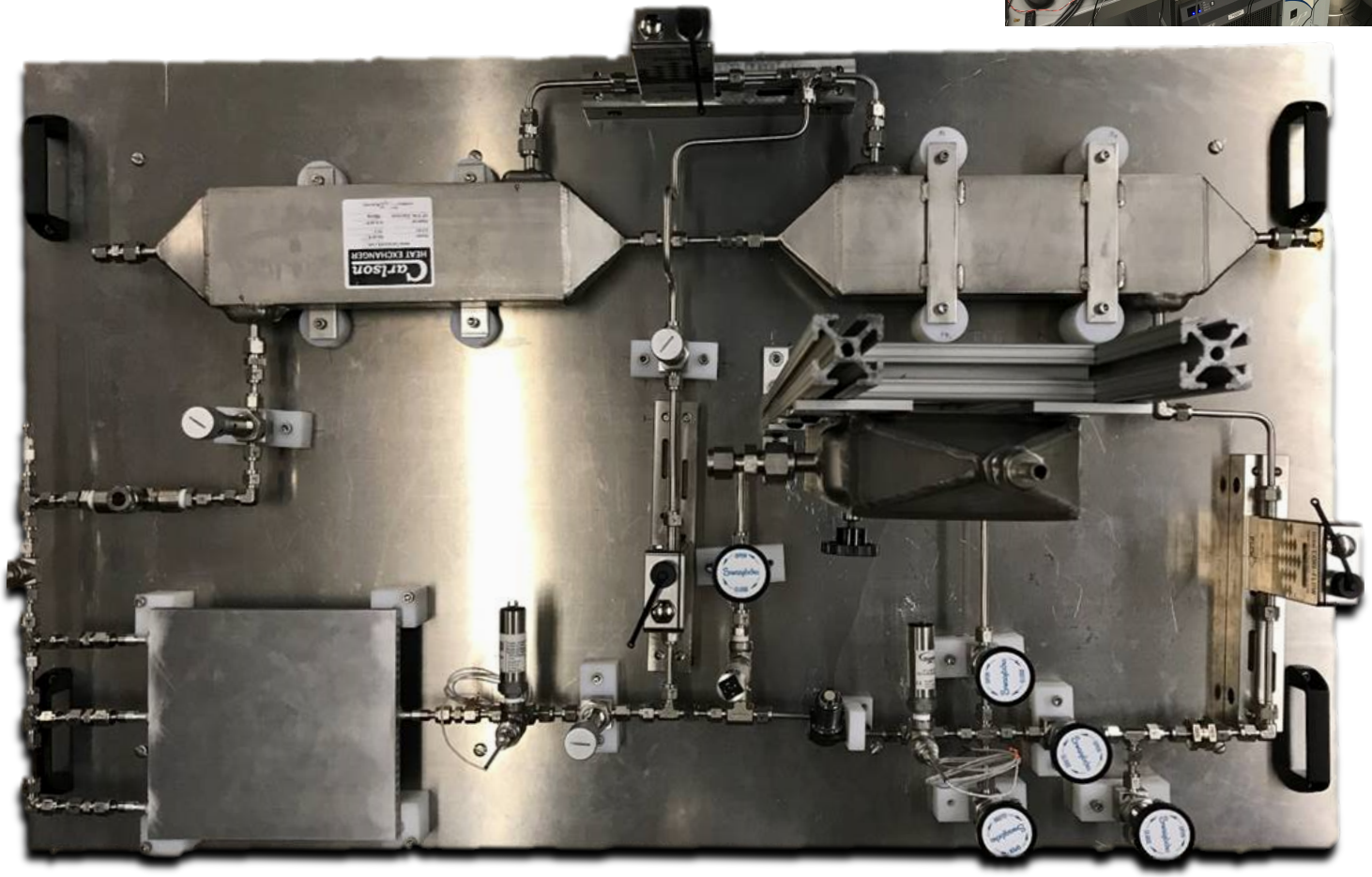

Ammonia Testbed

Experimental Data I

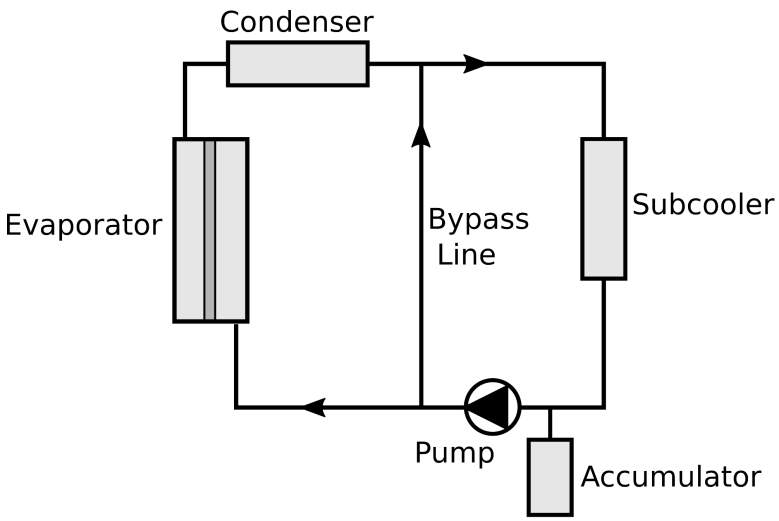

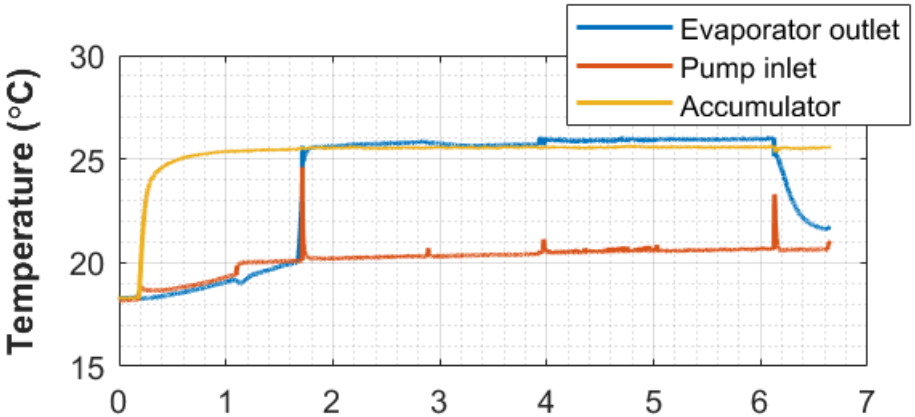

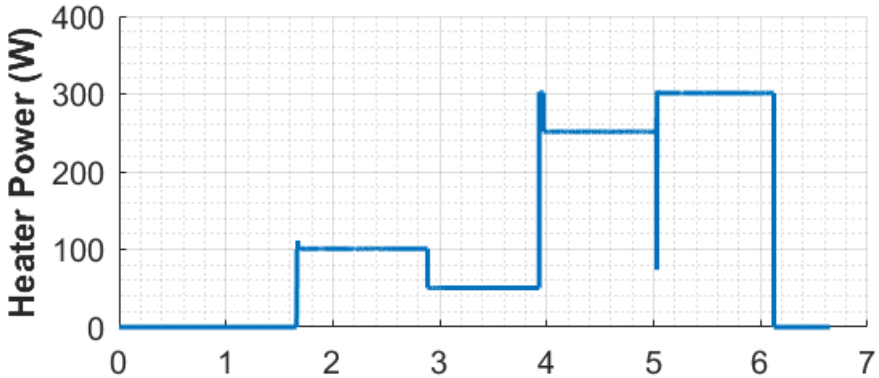

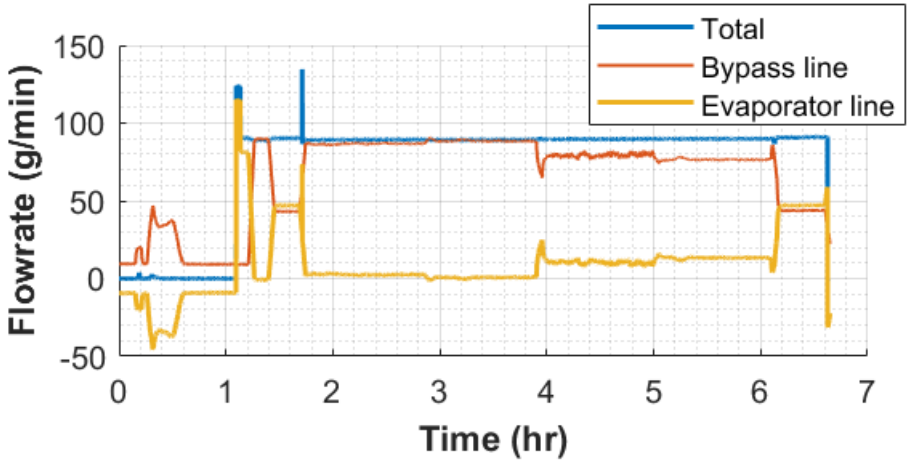

Notes

- Total flowrate fixed @ 90 g/min
- Heat load varied from 50 W to 300 W
- Temperature @ evaporator outlet steady at ~27°C
- As heat load increases, evaporator flowrate increases

Ammonia Testbed

Experimental Data II

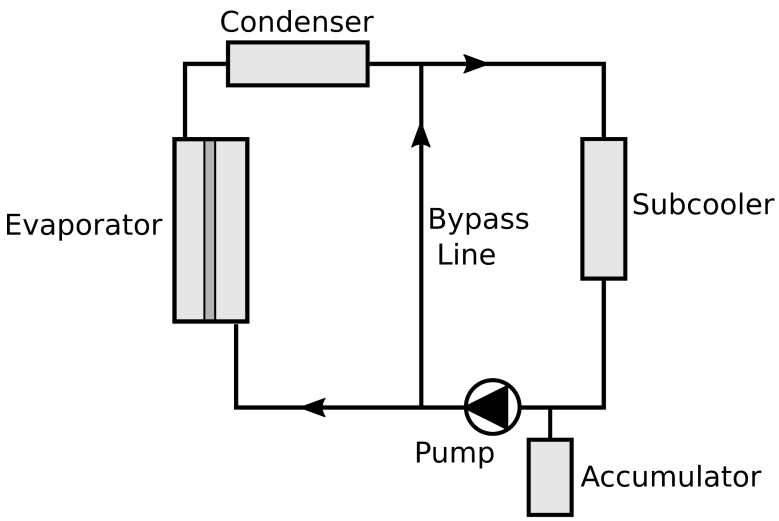

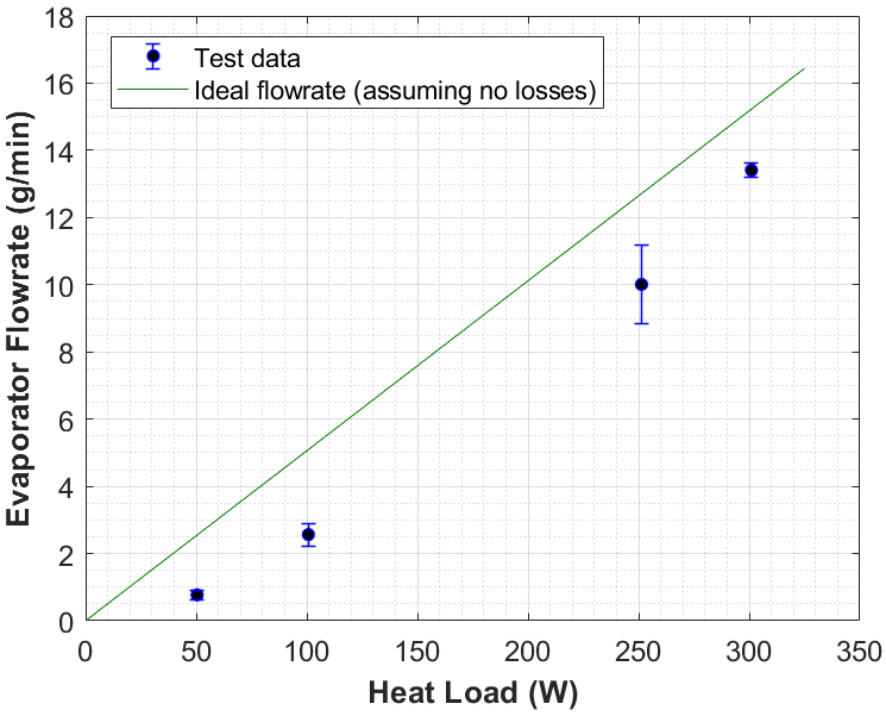

Notes

- As the heat load increases, the flowrate through the evaporator increases

- This implies that
  a) The evaporator wick is working as a capillary pump
  b) The fluid phases are separated with pure vapor only existing between evaporator and condenser

- **The system is working as anticipated**

Ammonia Testbed

Evaporator IR Images

Pump Flowrate: 90 g/min
Accumulator Temperature: 26°C
Evaporator Temperature: 28°C

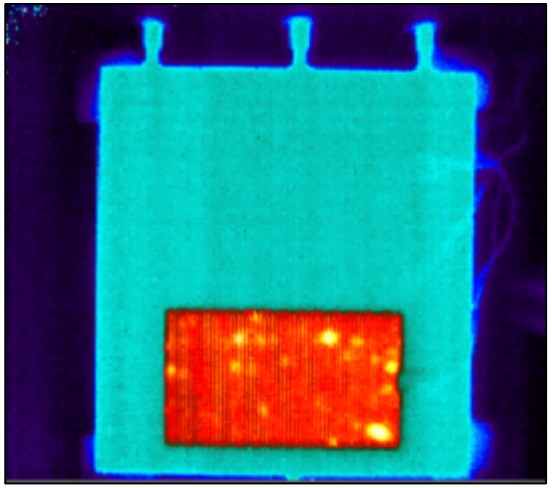

30 W

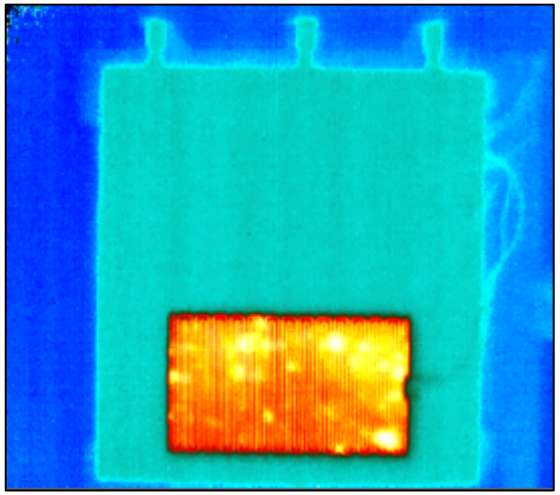

100 W

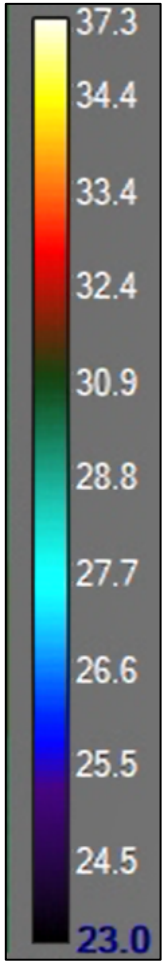

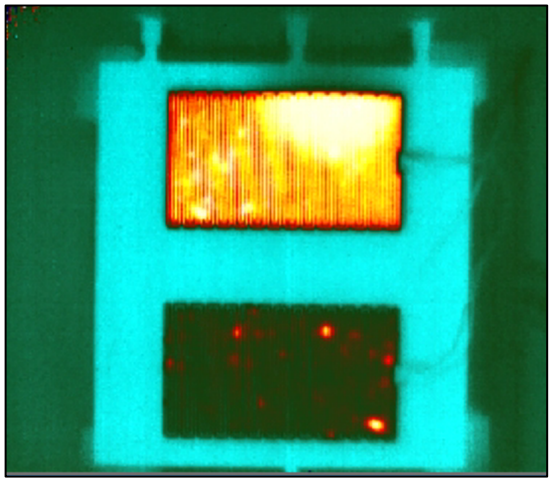

150 W
(100 W top; 50 W bottom)

325 W
(150 W top; 175 W bottom)

Ammonia Testbed

Evaporator Design

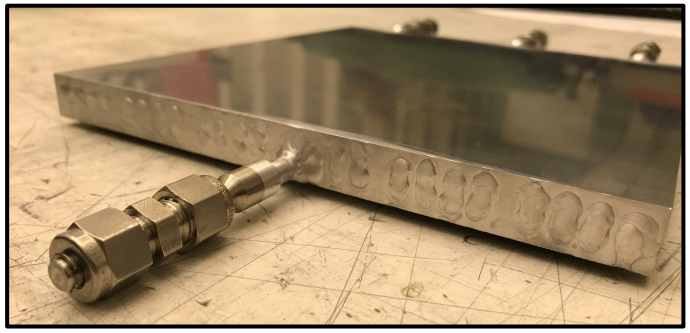

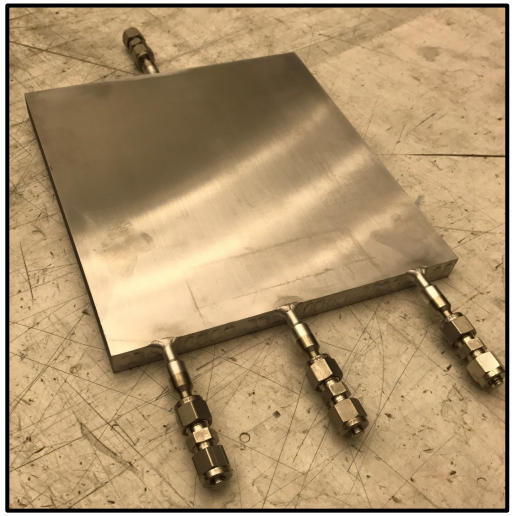

Fabrication: DMLS
Material: Aluminum
Size: 8.4” x 7.8” x 0.63”
MAWP: 200 psig
Max Pore Size: 22 μm
Permeability: 1e-13 m^2
Porosity: 24%

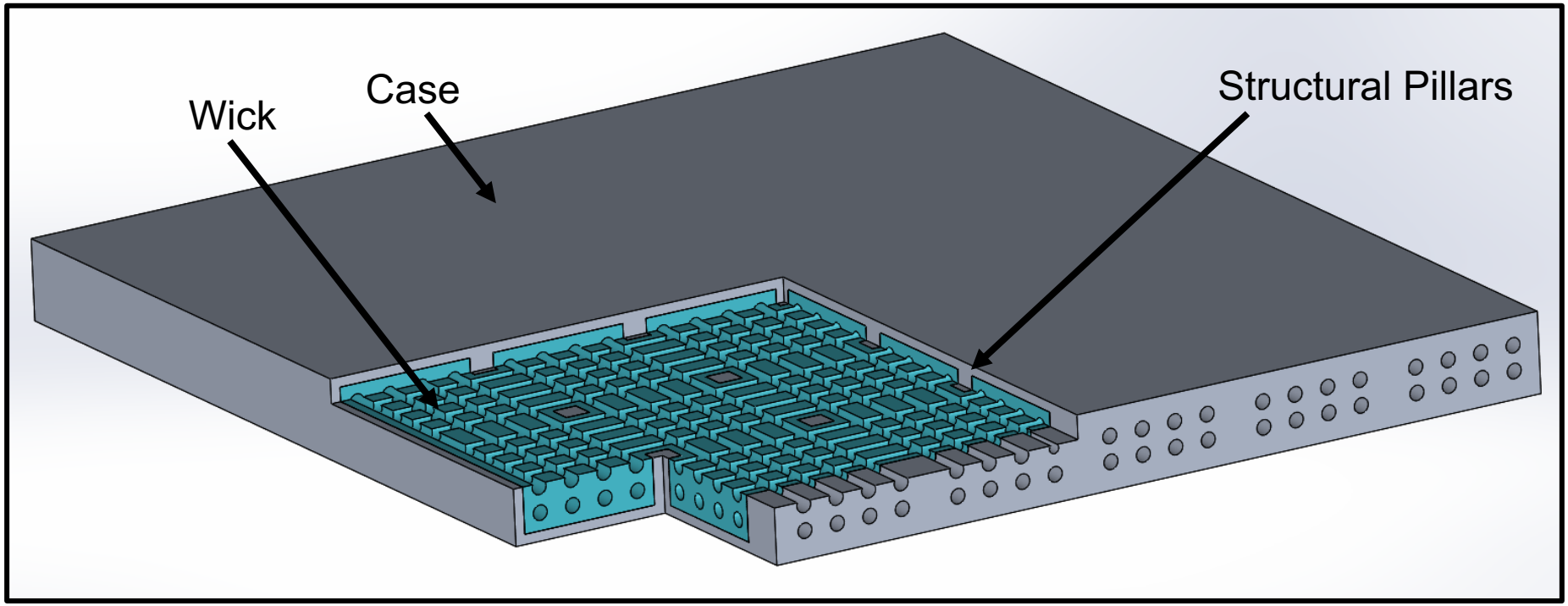

Conclusion

- A new architecture for a pump-assisted CPL has been developed
- A prototype ammonia testbed has been built and tested
  - System incorporates a novel AM planar evaporator

- Preliminary test results indicate that the system is feasible
  - System operated as expected
  - Transported heat loads from 30 W to 850 W
  - Max heat flux: 13 W/cm^2
  - Subcooling demonstrated from 3°C – 10°C

Future Work

- Refine evaporator design
  - Reduce thickness and increase effectiveness

- Increase TRL of system
  - Integrate flight-like components into testbed
  - Continue to experimentally characterize system
  - Develop analytical/numerical design and prediction capability
  - Purse flight-demo opportunities

References

1. Furst, Benjamin, et al. "A Comparison of System Architectures for a Mechanically Pumped Two-Phase Thermal Control System." 47th International Conference on Environmental Systems, 2017.

2. Cappucci, Stefano, et al. "Working Fluid Trade Study for a Two-Phase Mechanically Pumped Loop Thermal Control System." 48th International Conference on Environmental Systems, 2018.

3. Furst, Benjamin, et al. "An Additively Manufactured Evaporator with Integrated Porous Structures for Two-Phase Thermal Control." 48th International Conference on Environmental Systems, 2018.

4. Sunada, Eric, et al. "A two-phase mechanically pumped fluid loop for thermal control of deep space science missions." 46th International Conference on Environmental Systems, 2016.

Jet Propulsion Laboratory
California Institute of Technology

jpl.nasa.gov

© 2019. California Institute of Technology.
Government sponsorship acknowledged.