The WFIRST/AFTA Coronagraph Instrument Optical Design

Hong Tang*, Mayer Rud, Richard Demers, Renaud Goullioud, John Krist, Fang Shi, Feng Zhao

Jet Propulsion Laboratory, California Institute of Technology, 4800 Oak Grove Drive, Pasadena, CA 91109, USA

ABSTRACT

The most recent concept for the Wide Field Infrared Survey Telescope (WFIRST) Design Reference Mission (DRM) features an instrument that will perform exoplanet detection via coronagraphy of the host star. This observatory is based on the existing Astrophysics Focused Telescope Asset's (AFTA) 2.4-meter telescope. The WFIRST/AFTA Coronagraph Instrument combines the Hybrid Lyot and Shaped Pupil Coronagraphs to meet the science requirements. The cycle 5 optical design fits the required enclosure and accommodates both coronagraphic architectures. We present the optical performance including throughput of both the imaging and the IFS channels, the wavefront error at the first pupil,and polarization effects from optical coatings.

Keywords: WFIRST, AFTA, coronagraph

1. INTRODUCTION

The Wide Field Infrared Survey Telescope (WFIRST) Design Reference Mission is based on the AFTA 2.4 meter telescope. It features the Wide-Field Instrument (WFI) and the Coronagraph Instrument (CGI). A comprehensive treatment of the mission science and engineering are in the WFIRST-AFTA 2015 Report by the Science Definition Team.[1] A more detailed description of both instruments based on design cycle 5 can be found in the report.

The CGI will perform direct imaging and spectral characterization of exoplanets. It is designed to operate in the 430 to 980 nanometers range. The planetary systems will be observed sequentially in seven bands of 5 to 18% bandwidth. The inner working angle (IWA) of the coronagraph will be approximately 3λ/D, ranging from 110 to 250 milli-arcseconds depending on the spectral band. Similarly, the outer working angle (OWA), limited by the number of actuators on the deformable mirrors, will be approximately 10λ/D, varying from 0.4 to 1.6 arcseconds depending on the spectral band. The outer working angle used for debris disk imaging will be 20λ/D.

The goal is to achieve a starlight extinction ratio (or contrast) of better than one part per billion (10-9) after post-processing of the speckle pattern over the coronagraph field of view. This should enable the observation of cold Jupiters, Neptunes and icy planets down to two Earth radii. The imaging camera focal plane array (FPA), over-sampled at 430 nanometers, has a plate scale of 10 milli-arcseconds per pixel. A medium resolution (R~70) integral field spectrograph (IFS) similar to that described in reference [2] will produce spectra of the exoplanet in the three contiguous spectral bands that cover the 600 to 980 nanometers range.

The optical beam train in CGI is composed of three major sub-systems, the Collimator Assembly, Coronagraph and IFS. The Collimator Assembly corrects a large amount of aberration in the optical beam coming off the telescope's secondary mirror, at 0.4 degree field bias. It also has an extremely flat field performance within line-of-sight of the telescope (±14 mas).

*hong.tang@jpl.nasa.gov, +1 818 393 0786, 4800 Oak Grove Drive, Pasadena, CA 91109, USA

The optical design of coronagraph bench combines the Hybrid Lyot and Shaped Pupil Coronagraphs (HLC and SPC) into the same optical beam train. It supports either HLC or SPC observation modes by using a series of mask/filter change mechanisms.

This paper presents the optical design for the cycle 5 coronagraph instrument on the WFIRST-AFTA reference mission. In the following Section, we describe the overall CGI optical design including the Collimator Assembly design. We discuss how the Coronagraph bench supports both HLC and SPC. In Section 3, present the polarization dependent wavefront error as well as the solution chosen to mitigate performance impact.

2. INSTRUMENT OPTICAL DESIGN

The WFIRST-AFTA observatory is shown in Figure 1. It features a 2.4 m telescope, modular instruments (WFI and CGI), an instrument carrier and a spacecraft bus.[1] There is modular enclosure that encompasses the CGI. The optical layout needs to fit into a constrained volume within the instrument carrier and must deliver the optical performance required by HLC and SPC coronagraphs.

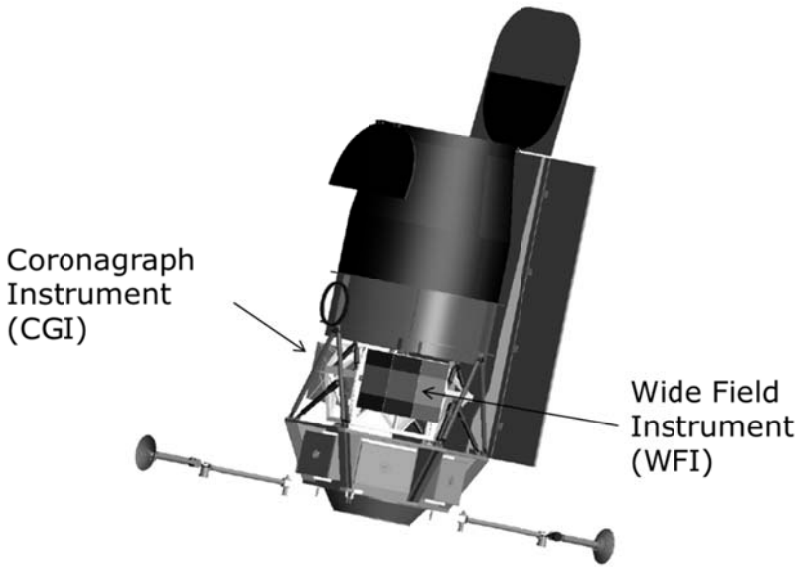

Figure 1. WFIRST-AFTA Observatory configuration featuring the 2.4-m telescope, two modular instruments and a modular spacecraft.

The CGI is subdivided into two planes and three major assemblies as shown in Figure 2. The right side of Figure 2 shows a side view of the CGI optics, looking along the direction of the two optical planes, one plane containing the coronagraph core optics and the other containing the Collimator Assembly and the IFS. The Collimator Assembly corrects the aberrations from the telescope and folds light out of the first plane. The optical beam train continues in the second plane, the Coronagraph sub-bench, where all direct imaging coronagraph functions are carried out. In the spectroscopic mode, two fold mirrors direct the light beam out of the Coronagraph sub-bench into the IFS.

2.1 Collimator Assembly module

The telescope operates at a 0.4 degree field bias for the coronagraph. It has 13,570 nm RMS static wavefront error (WFE) at its focus. The functions of the Collimator Assembly are to correct the large amount of static WFE from the telescope,

collimate the light beam and provide a physically accessible pupil for the fast steering mirror (FSM). Furthermore, the Collimator Assembly is required to have an extremely flat-field performance within the range of the Attitude Control System (ACS) of the spacecraft, ±14 mas. The Collimator Assembly is comprised of four optical elements. There are two powered elements, the tertiary mirror (M3) and the collimator (M4) in addition to two flat fold mirrors (FM). The function of the second FM is to direct the collimated beam to the FSM located in the Coronagraph sub-bench. The performance of the Collimator Assembly is summarized in Table 1. The Collimator Assembly reduces the WFE from the telescope to 2 nm RMS. It has a flat field performance (within ±14 mas) of 100 pm RMS and 10 pm RMS for Coma only.

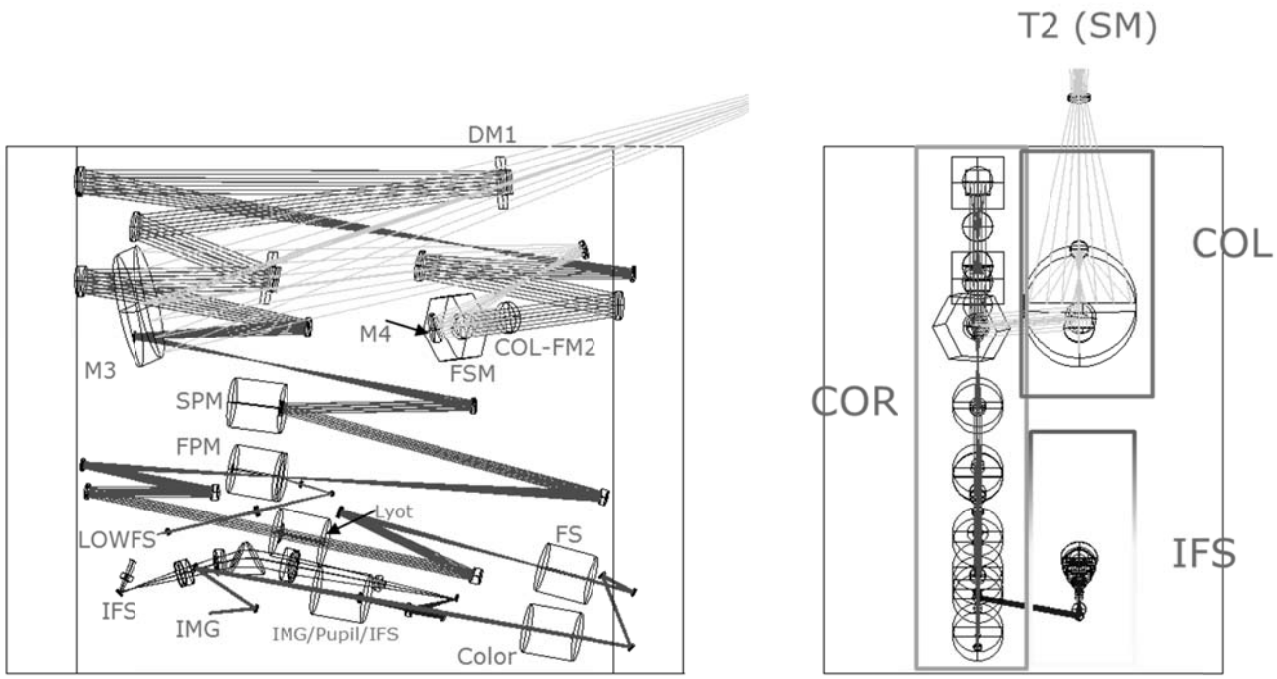

Figure 2. The CGI optical layout featuring the Collimator Assembly, the Coronagraph sub-bench and the IFS module. The three modules are separated in two planes.

Table 1. Optical performance of the Collimator Assembly.

Design Specification		**Value**	**Unit**
Static WFE (RMS)	After T2	13,570	nm
	After M4	2	nm
WFE (RMS) over 14 mas LOS	After M4	100	pm
	Coma (Aft M4)	10	pm

2.2 Coronagraph module

The Coronagraph Instrument can switch between two coronagraphic architecture, the HLC and SPC, using a single optical beam train by a series of mask and filter changing mechanisms. Off-Axis Parabolic (OAP) mirrors are used to form optical pupils at deformable mirror #1 (DM1), the shaped pupil mask (SPM) and at Lyot stop, respectively. The design provides accessible focal points for the focal plane mask (FPM) and field stop (FS). It provides a stable platform to host all optical elements and all mask and filter changing mechanisms. Furthermore, it hosts the imaging channel camera, low-order wavefront sensor (LOWFS) and its camera.

The optical layout of the Coronagraph sub-bench is illustrated in Figure 3. The beam train in the Coronagraph begins at the FSM where a pupil is formed by the Collimator Assembly. This pupil is reimaged to DM1 by two OAPs. A FM mounted on a servo mechanism in the first pupil reimaging system is used to carry out correction of the optical system focus drift. The pupil at DM1 is relayed to the SPM. The light beam from SPM is focused onto the FPM that blocks the majority of the star light in the case of HLC. The transmitted light through the FPM is then collimated and a pupil is formed at the Lyot stop, where residual diffracted star light is blocked. After the Lyot stop a focus is formed for the FS. The light beam is collimated again and passes through color filters. A rotator mechanism is used to select either the optical path to the imaging camera for planet imaging or the optical path to the IFS. This mechanism can also be used to select a lens to relay a pupil onto the imaging camera.

The reflected starlight at the FPM is used by the LOWFS, which senses changes in the low order wavefront error (from tilt to third-order spherical aberration). The LOWFS controller corrects the tilt errors by commanding the FSM. It corrects the focus error by translating the focus correction mirror. It records the other low-order aberration terms which can be used for post-processing of the speckle fields in imaging channel and IFS.

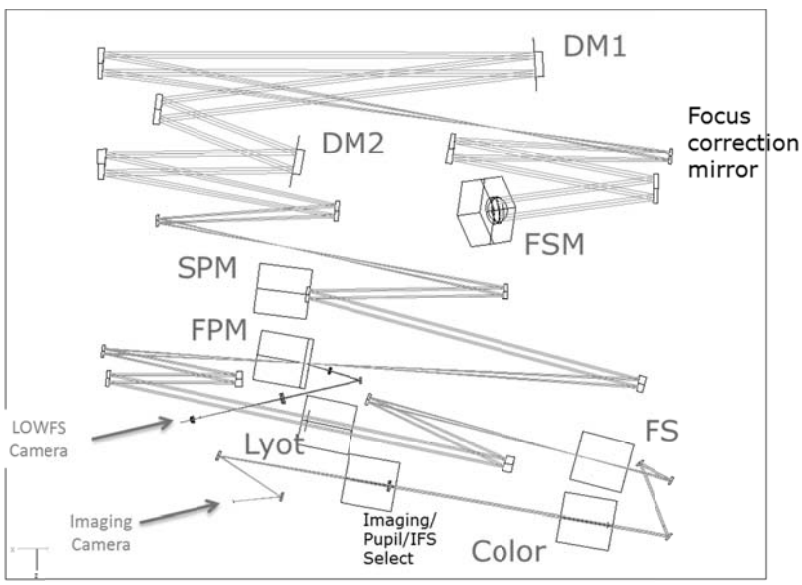

Figure 3. The Coronagraph sub-bench begins at the FSM. It contains all the coronagraphic masks and filters, DMs, imaging camera and LOWFS. The large rectangles represent the mask/filter change mechanisms.

2.3 Operational modes

The CGI operates in either HLC or SPC mode with a set of the mask/filter changing mechanisms. The same filter wheel mechanism is used for all six mask/filter changers. Figure 4 illustrates the optical beam train and the masks for HLC and SPC modes. Fold mirror #1 (FM1) is the afore mentioned focus correction mirror. The polarization beamsplitter (PBS) splits light into two linearly polarized beams in the imaging channel. The imaging lens forms two images of the polarized light on the imaging camera. The reasoning for splitting the polarizations is described in next section.

An enhanced silver coating is baselined for all the mirrors. The throughput in open-mask/filter mode is 0.17 for the HLC in the imaging channel, where the PBS is fixed in the beam train. The throughput in open-mask/filter mode is 0.24 for the SPC when using the IFS. The throughput for HLC in the imaging channel with all the masks/filters in place is 0.04. The corresponding throughput with masks/filters for the SPC using the IFS is 0.04.

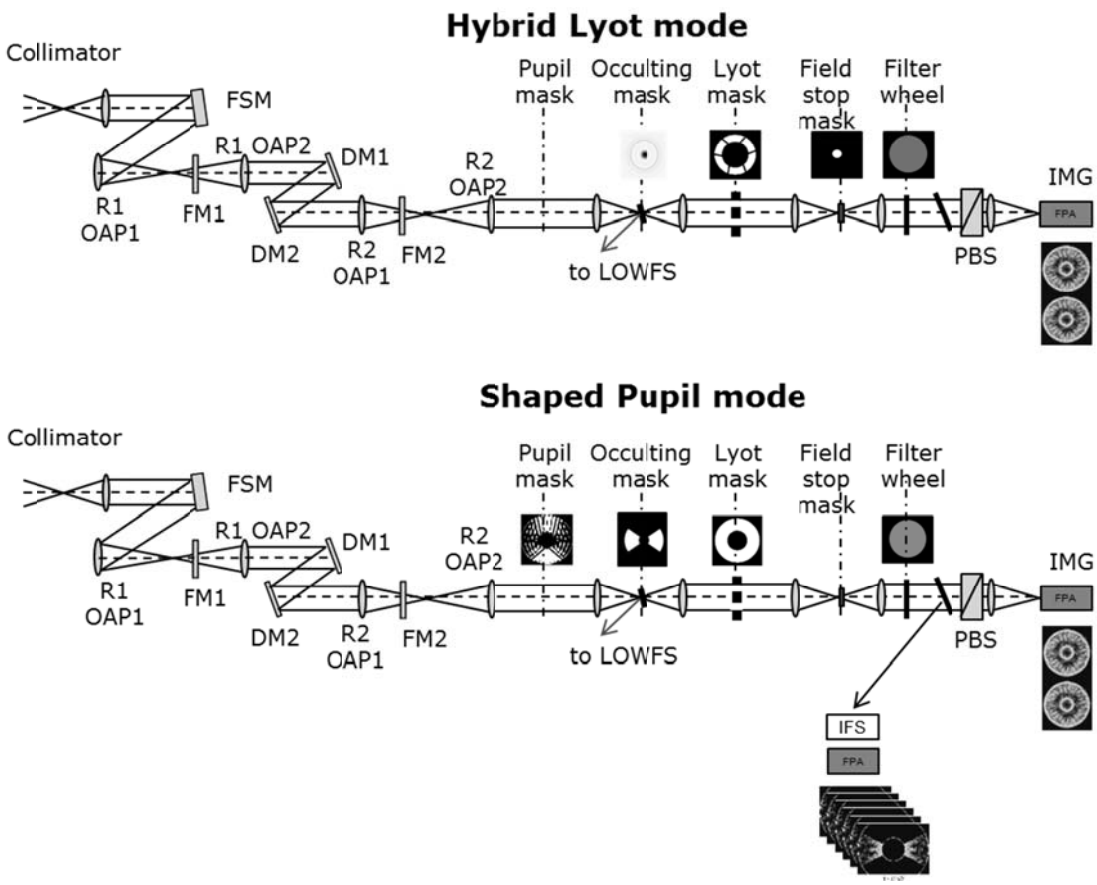

Figure 4. Operational modes in CGI. The same optical beam train supports both HLC and SPC with six mask/filter changing mechanisms.

3. POLARIZATION DEPENDENT WFE

Light entering an optical system such as the WFIRST-AFTA telescope and the CGI can be decomposed into two orthogonal linearly polarized states. Light of the two polarizations experience different amplitude attenuation and phase change when propagating through the optical system with many reflective elements. Optical coatings applied to

reflective surfaces generally "amplify" the difference in phase between the two polarizations. The faster the optical element is, the more difference between the two phases upon reflection. In the CGI, the two DMs work with the coronagraph masks and filters to generate dark speckle fields (dark hole) where a faint planet may be detected. The DMs correct the WFE in the system to create the dark hole. The polarization dependent phase difference upon reflection by a surface is a function of the coating structure, angle of incidence and the wavelength of light. It is manifested as polarization-dependent (PD) WFE when we consider the entire pupil. Analysis of PD-WFE becomes necessary to understand its impact to the depth of the dark-hole (coronagraphic contrast).

The results of the analysis are shown in Figure 5. The primary mirror (PM) and secondary mirror (SM) of the telescope are the two fastest optical elements in the system. The PD-WFE is dominated by the contributions from the PM and SM. As we can see that the PD-WFE is chromatic. It is 37 nm P-V at a wavelength of 430 nm, 9 nm for 550 nm and -35 nm for 980 nm.

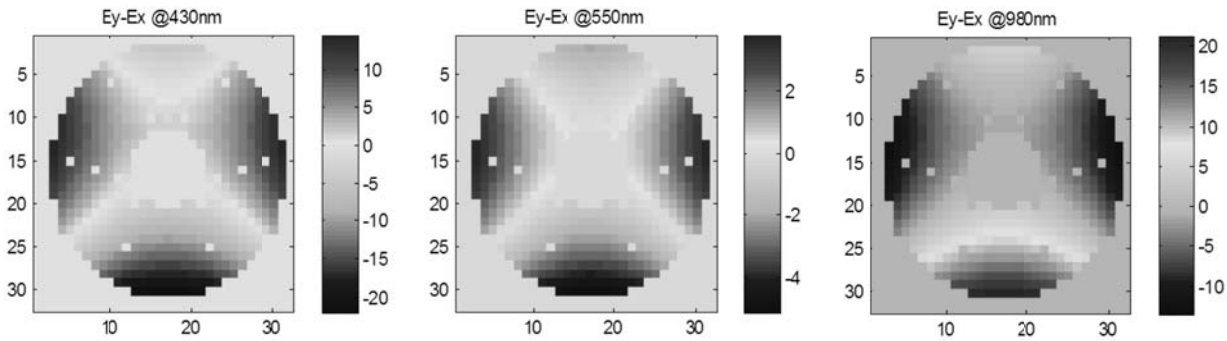

Figure 5. The PD-WFE is generated by subtracting the WFE of x-polarization from WFE of y-polarization. The peak to valley (P-V) PD-WFE is 37 nm for light of wavelength 430 nm, 9 nm for 550 nm and -35 nm for 980 nm. The blank dots are in the shadow of the telescope spiders. The WFE does not include these dots.

We input the PD-WFE into the model of the HLC. There is significant impact to the contrast. The results are shown in Figure 6 for the 10% wavelength band centered at 550 nm.[3] The highest contrast is achieved when optimization and observation are done using the same single polarization (x or y). The contrast is much lower if optimization and observation are done on both x and y polarizations simultaneously.

The current solution to the PD-WFE is to split x and y polarizations into two images for the imaging channel. We can choose to optimize and observe for either x or y polarization. We can also choose to optimize for the combination of both polarizations while observing x and y polarization in two separate images. The cost of separating the image into two polarizations is a reduction in throughput of 50%.

The SPC is less sensitive to low-order WFE. it primarily works with the IFS channel. Therefore the light entering IFS is not split into two polarizations.

4. FUTURE WORK

Design cycle 5 ended with some liens left for cycle 6. They include:

1. Re-Optimize M3 and M4 to simpler surfaces.
2. Modify IFS to fit into CGI that meets science requirements.
3. Increase CGI beam clearance from Instrument Carrier.

4. Conduct trades of separating Collimator Assembly from CGI and attaching it directly to the telescope's after metering structure (AMS).
5. Reduce number of fold mirrors to increase the throughput.
6. Explore methods of compensation for PD-WFE.

At the time of submission of this paper, WFIRST-AFTA design cycle 6 is almost completed. Most of the liens have been completed. Another paper describing the new optical design is in the works. More details of the cycle 6 CGI reference mission can be found in Reference [4].

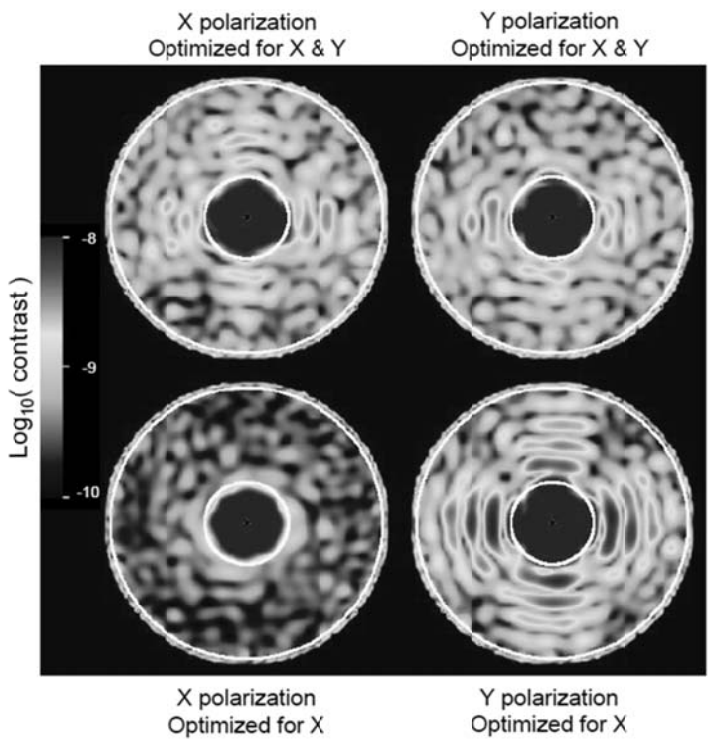

Figure 6. HLC Contrast (λ = 523 - 578 nm; λc = 550 nm) with 0.4 mas RMS jitter and 1.0 mas star in the X and Y polarization channels when EFC was optimized for (top) for both polarizations and (bottom) for only the X polarization. The cross-shaped patterns are due to the difference in astigmatism between the two polarization axes. Circles are r = 3 & 10 $\lambda c/D$.

5. ACKNOWLEDGMENTS

The research described in this presentation was performed at the Jet Propulsion Laboratory of the California Institute of Technology, under contract with the National Aeronautics and Space Administration, in close collaboration with the WFIRST-AFTA project team at the NASA Goddard Space Flight Center.

REFERENCES

[1] D. Spergel, et al, "Wide-Field InfraRed Survey Telescope-Astrophysics Focused Telescope Assets WFIRST-AFTA 2015 Report", http://wfirst.gsfc.nasa.gov/science/sdt_public/WFIRST-AFTA_SDT_Report_150310_Final.pdf.

[2] Q. Gong, et al, “Prototype Imaging Spectrograph for Coronagraphic Exoplanet Studies (PISCES) for WFIRST-AFTA”, Proc. SPIE 9605 (2015).
[3] J. Krist, et al, “An Overview of WFIRST-AFTA Coronagraph Optical Modeling”, Proc. SPIE 9605 (2015).
[4] R. Demers, et al, “Requirements and Design Reference Mission for the WFIRST-AFTA Coronagraph Instrument”, Proc. SPIE 9605 (2015).