Developing a Standard Test Program for CubeSats

Gabriella L. Seal

31st Aerospace Testing Seminar

Jet Propulsion Laboratory
California Institute of Technology

What are CubeSats?

- Small satellites that conform to the standardized CubeSat design specification, which controls the form factor, center of gravity location, and other features
- 1U = 10 cm cube, ~1.5 kg

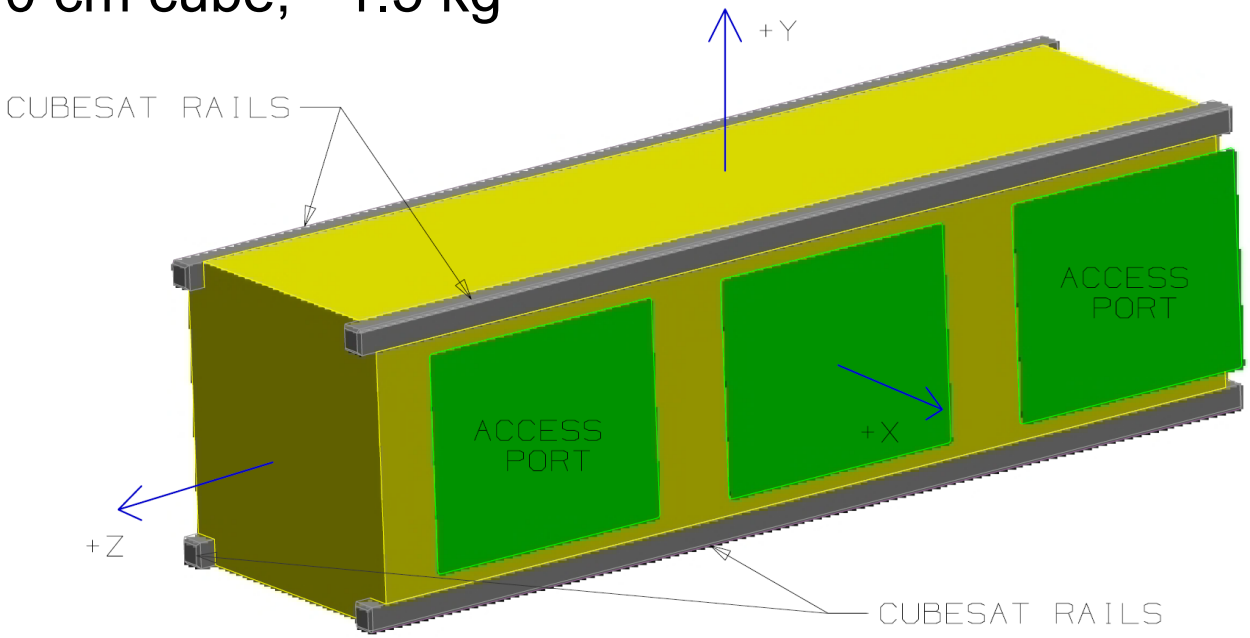

3U CubeSat

Source: CubeSat Design Specification Rev. 13

© 2018 California Institute of Technology. Government sponsorship acknowledged.

How do CubeSats get to space?

- CubeSats can utilize a variety of **dispensers**, which provide attachment to a launch vehicle and release the CubeSat at the appropriate time
  - Hard-mounted, soft-stowed
- CubeSats can be placed on a variety of **launch vehicles**
  - Antares, Delta II, Falcon 9
- CubeSats can be released and maneuvered to a variety of **trajectories**
  - Low-Earth orbit (LEO), lunar orbit, Mars flyby

© 2018 California Institute of Technology. Government sponsorship acknowledged.

Why do CubeSats need a special test program?

- Challenge: CubeSat developers can take greater risks, but they typically lack the resources to conduct extensive environmental test campaigns

- Solution: Develop a standard environmental test program for LEO CubeSats by tailoring the standard JPL environmental assurance approach for these projects based on
  - Risk posture (i.e., their willingness to accept risk)
  - Development schedule
  - Budget and funding profiles
  - Hardware pedigree: inherited, new design, commercial
  - Other considerations

© 2018 California Institute of Technology. Government sponsorship acknowledged.

Tailoring the standard (non-CubeSat) test program

Dynamics environment

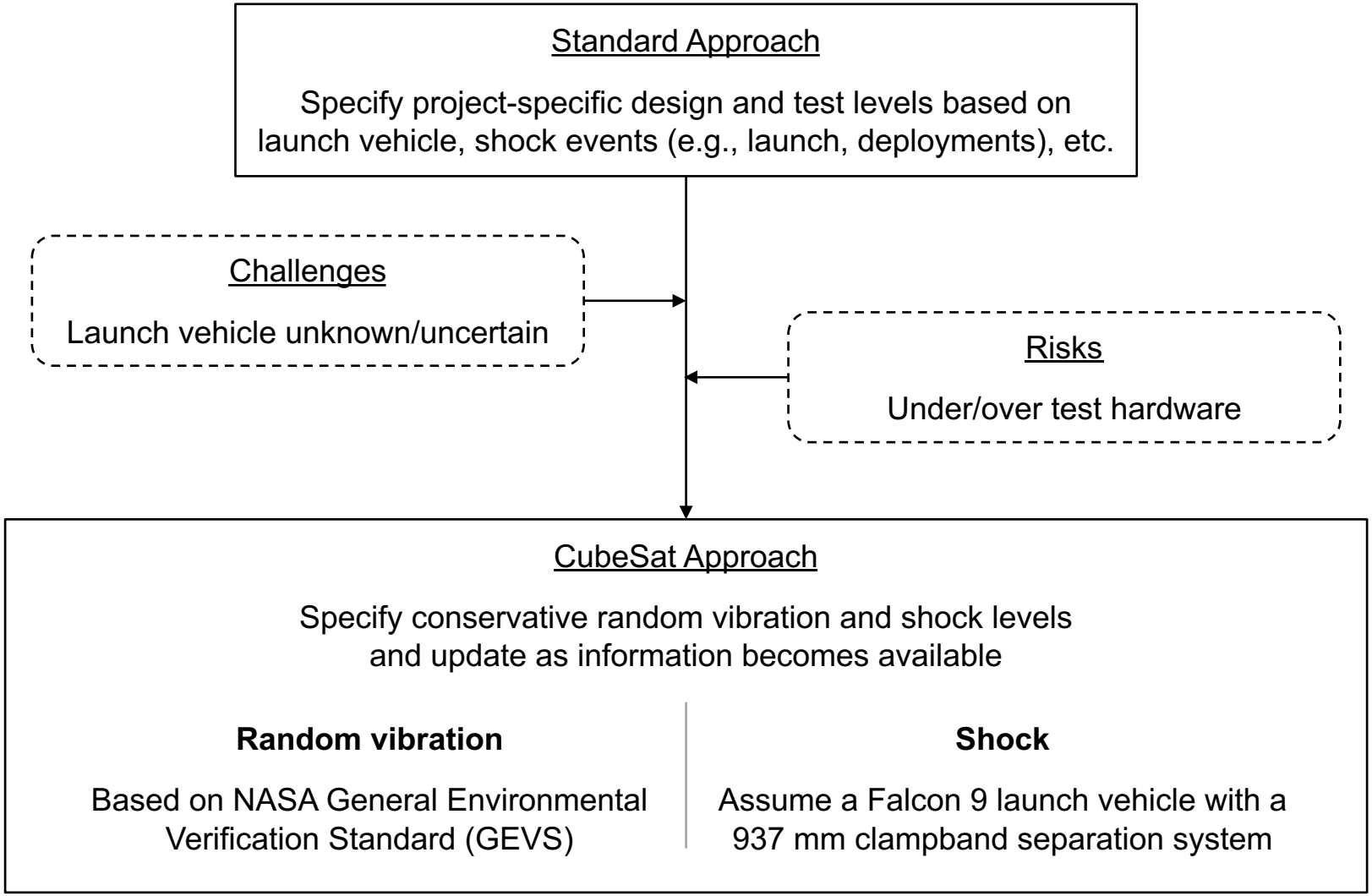

© 2018 California Institute of Technology. Government sponsorship acknowledged.

Electromagnetic environment

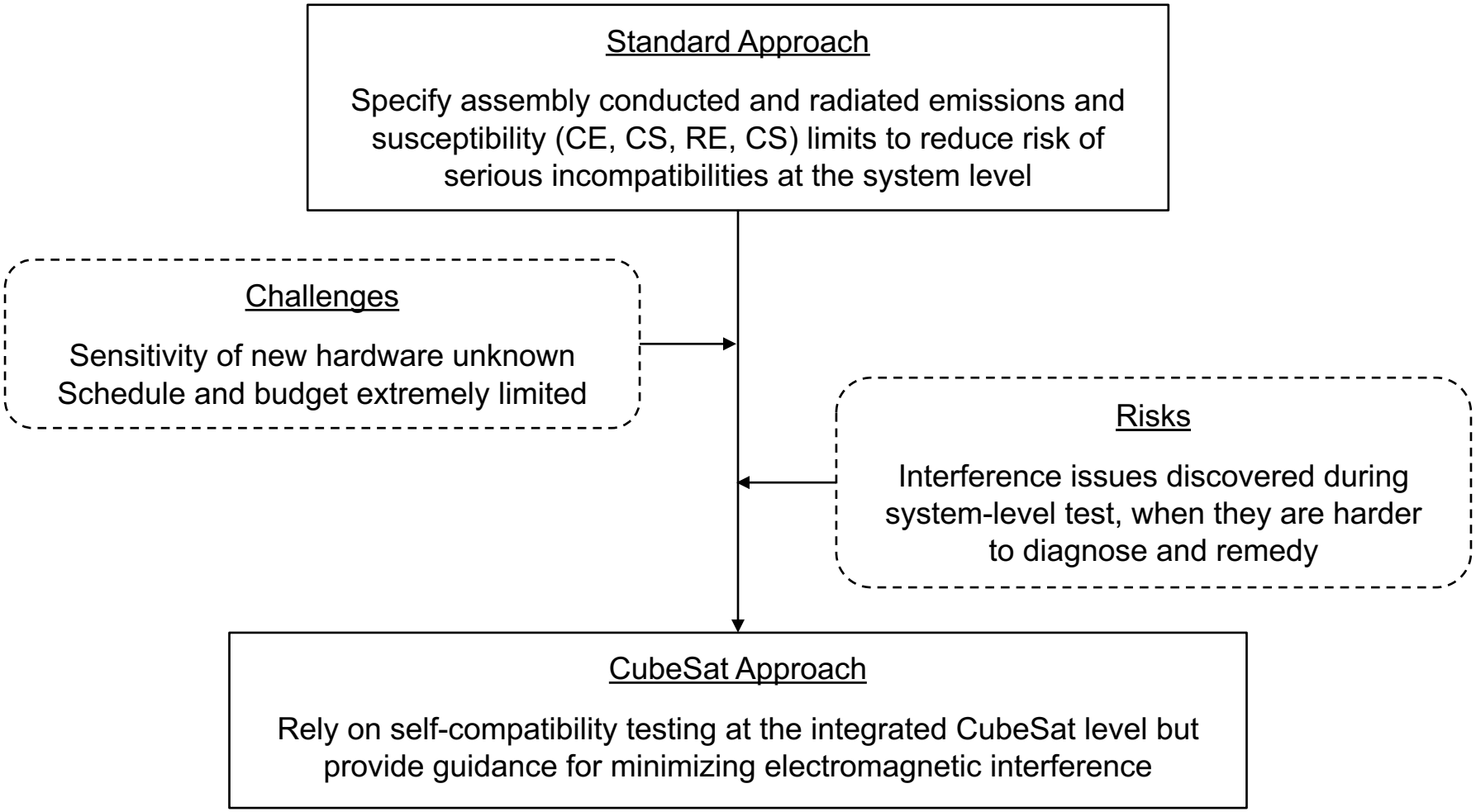

© 2018 California Institute of Technology. Government sponsorship acknowledged.

Lower-level testing

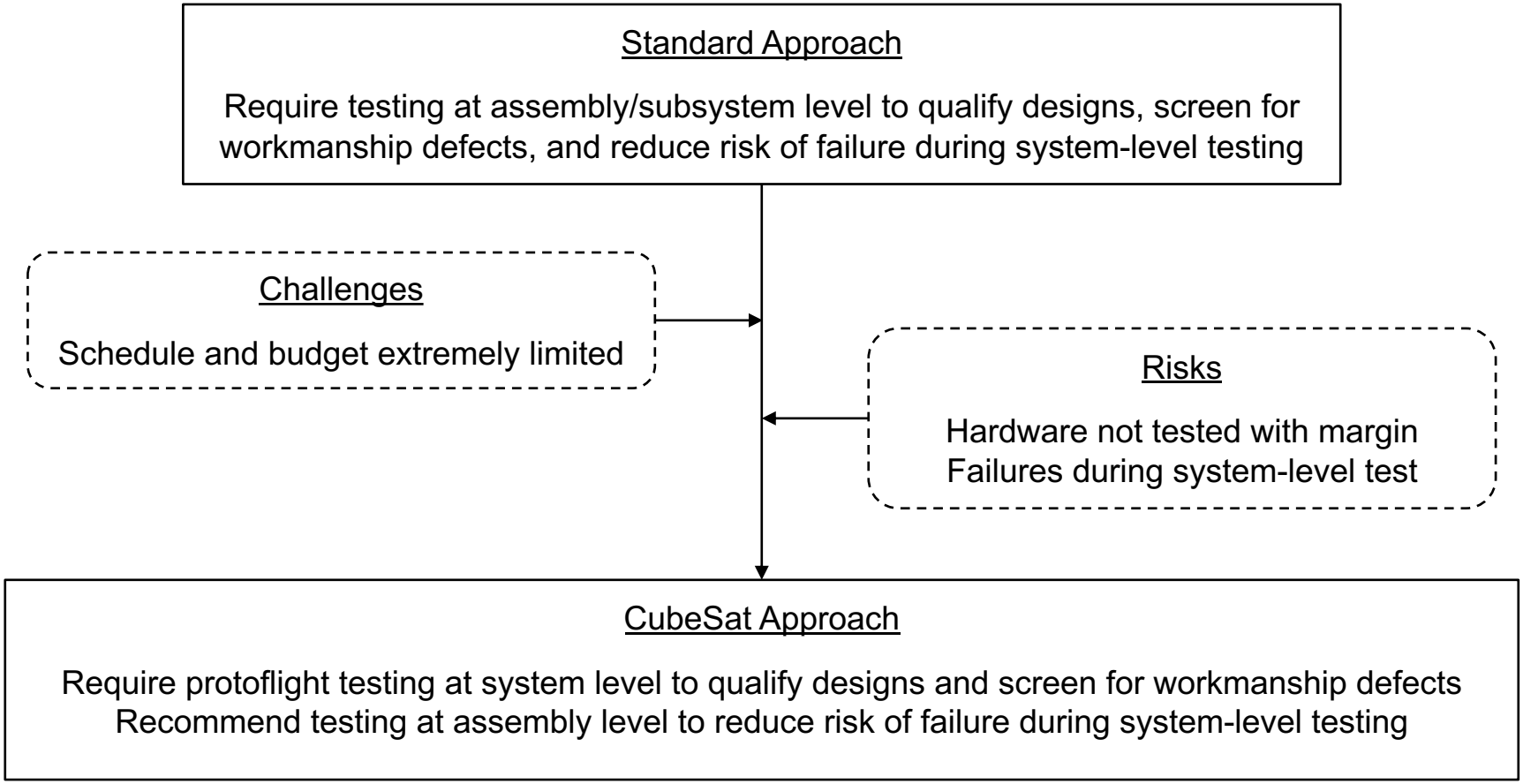

© 2018 California Institute of Technology. Government sponsorship acknowledged.

Implementing the general CubeSat test program

Test sequence

- Preferred sequence: EMC then dynamics then thermal
- In addition to technical considerations (e.g., testing in flight-like manner), CubeSat developers may base their test sequence decisions on:
  - Maturity of pretest analysis
  - Availability of suitable test venues
  - Availability of critical support equipment (e.g., dispenser simulator or other test fixture)
  - Accessibility of deployables (i.e., extent of disassembly needed to reset deployables)

© 2018 California Institute of Technology. Government sponsorship acknowledged.

Dynamics testing

- Options for vibration testing
  - Dispenser-defined test profile
  - GEVS protoflight test profile
  - JPL minimum workmanship test profile

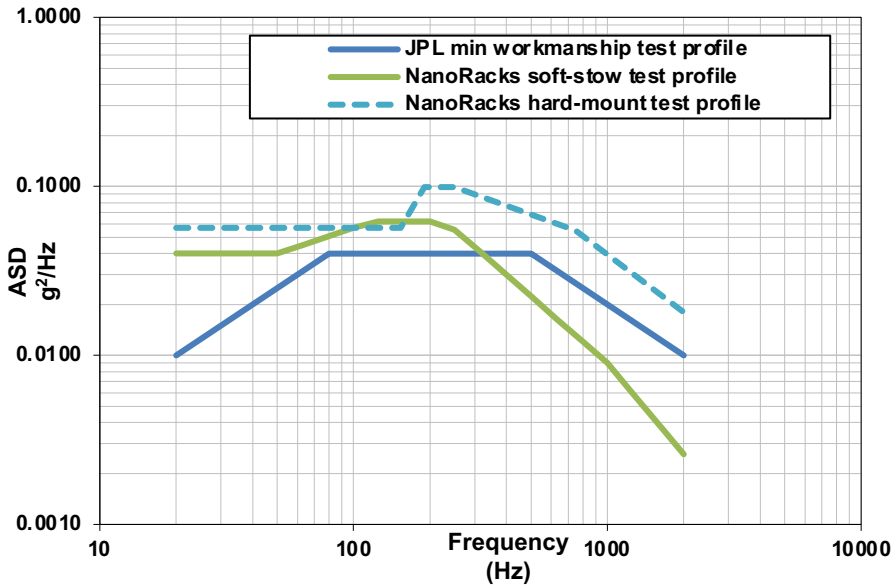

NanoRacks test profiles vs. JPL minimum workmanship

Source: NanoRacks CubeSat Deployer Interface Definition Document, June 2018

© 2018 California Institute of Technology. Government sponsorship acknowledged.

Thermal testing

- Not always possible or desirable to test the entire system with full protoflight margin, particularly with batteries

<u>Option</u>

Use a flight-like engineering model or spare flight battery during the system-level test and then replace it with the flight battery

➢ End-to-end performance of entire system can be verified over full protoflight test range

<u>Option</u>

Qualify the CubeSat bus, battery, and payload separately, then test to flight acceptance temperatures at the integrated CubeSat level

➢ Requires more thermal tests but avoids disassembly to replace battery after the test

© 2018 California Institute of Technology. Government sponsorship acknowledged.

Findings and Conclusions

- Standard environmental test program for LEO CubeSats
  - Used with several CubeSats and CubeSat payloads
  - Effective design and workmanship screen that **increases the likelihood of mission success while being responsive to project risk posture, schedule and budget constraints, and other considerations**

- Areas for improvement
  - Standard vibration environment that envelopes as many launch vehicles and dispensers as possible
  - Streamlined thermal test profile to make assembly-level testing more affordable without compromising its effectiveness

© 2018 California Institute of Technology. Government sponsorship acknowledged.

Jet Propulsion Laboratory
California Institute of Technology

jpl.nasa.gov