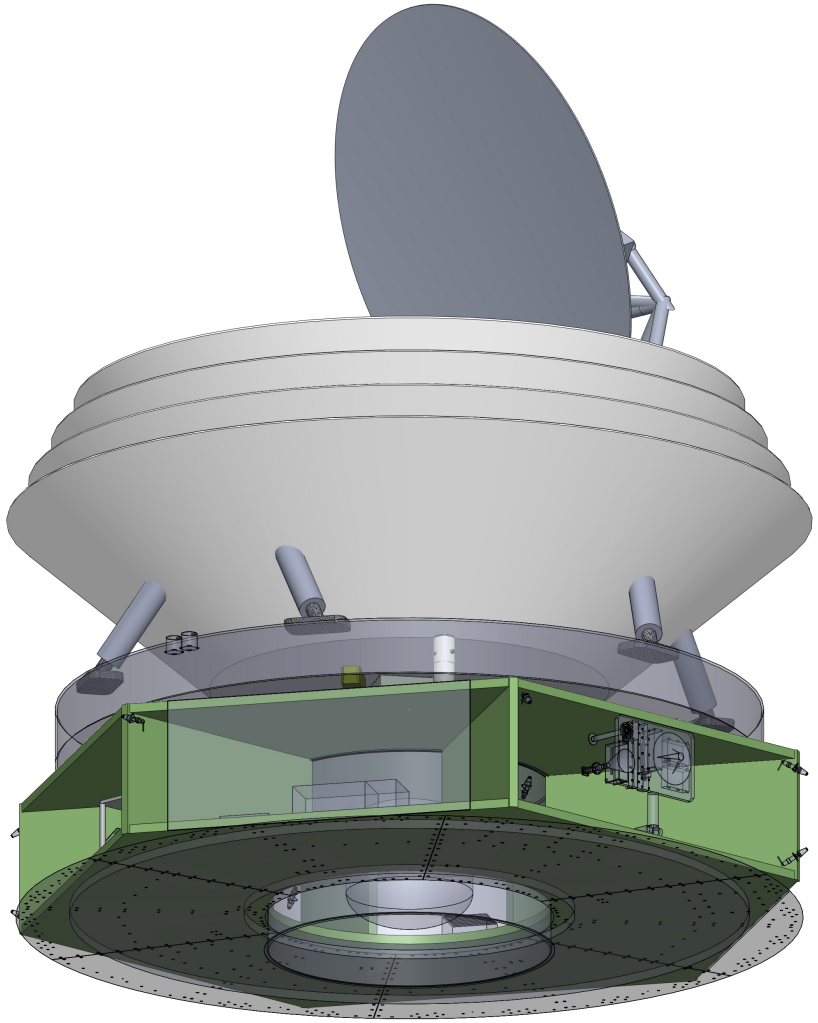

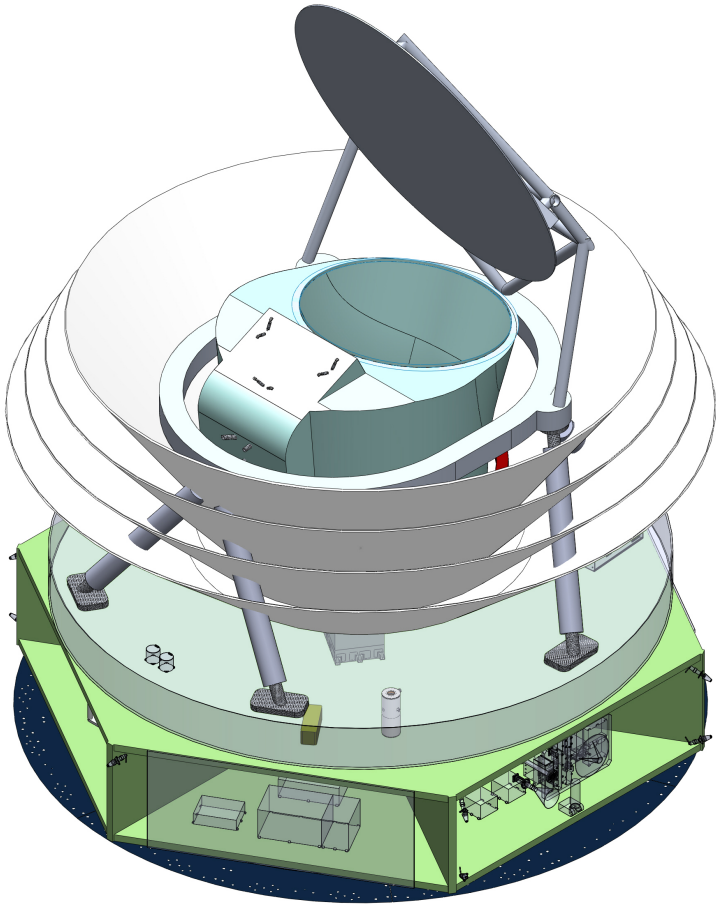

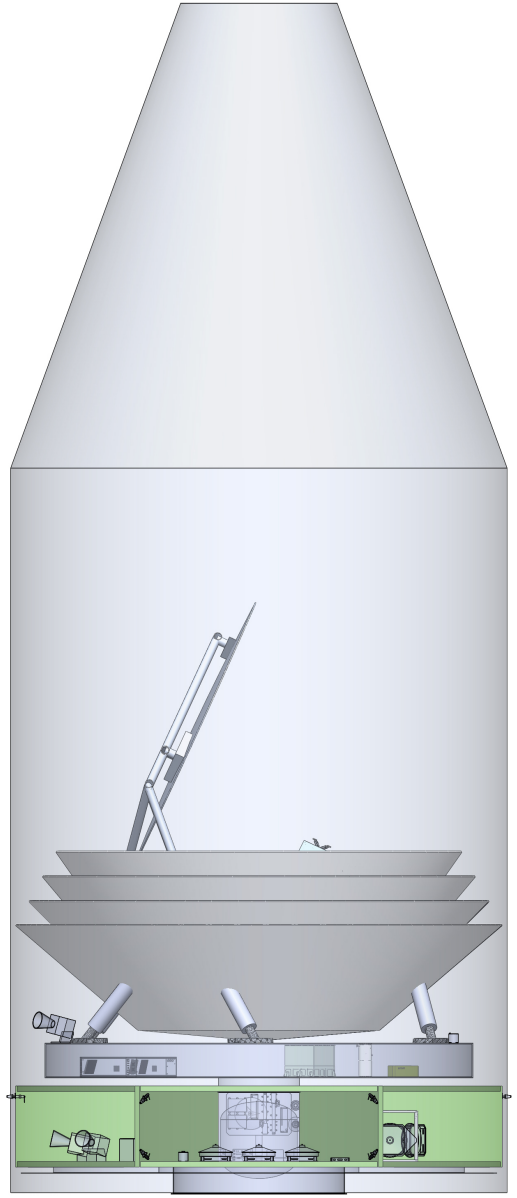

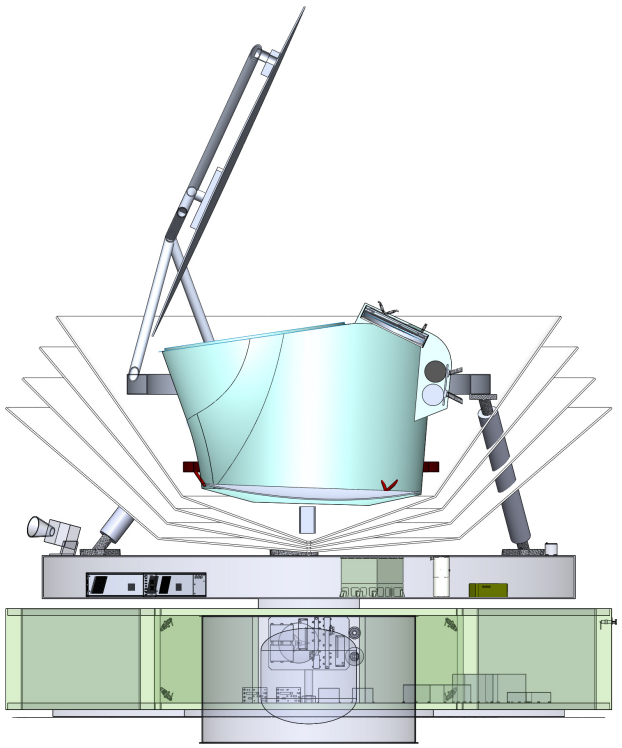

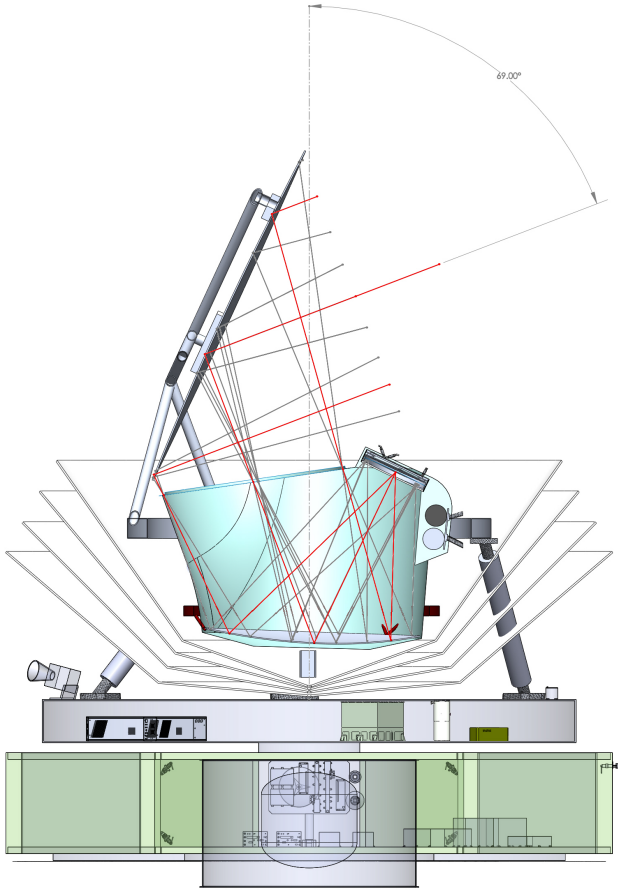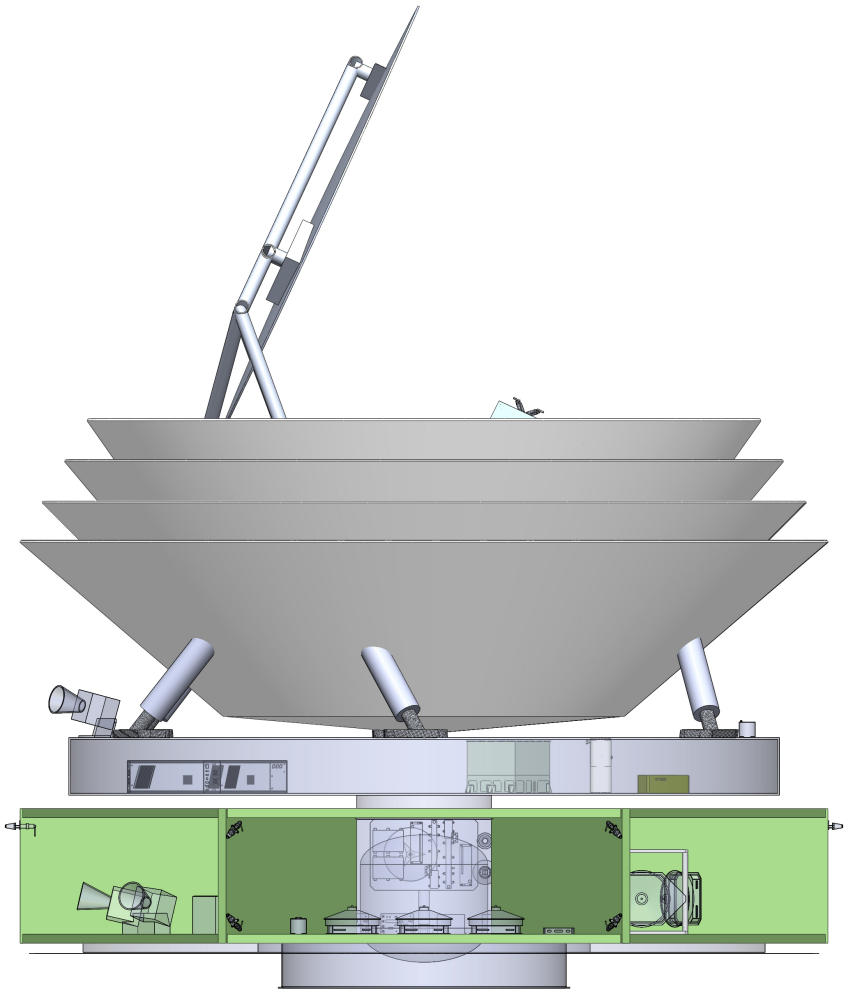
69.00°